OWNERS MANUAL

- Economical
- Ultra-safe
- Effective
- Healthy
- Simple
- Stylish
- Silent

AMERICAN
OWNED AND BUILT
United States Patent: 8,477,176

IMPORTANT
CUSTOMER INFORMATION:

THIS HEATER WILL NOT TURN ON UNLESS MOUNTED ON A WALL

(Please read more about this unique safety feature on the page 3)

TABLE OF CONTENTS

Models Covered by This Manual....2
If You Need Help....2
Features and Benefits....3
Important Instructions....3
Installation Instructions....3
Installing Locking Bar for Permanent Attachment....5
Hardwiring Instructions....6
Operating Instructions....8
Care & Maintenance Instructions....9
Trouble Shooting....10
Specifications & Certifications....10
Warranty & Contact Info....11
Manufacturer's Contact Information....11

THANK YOU FOR CHOOSING THE ENVI HEATER

Please take a few moments to thoroughly read the instructions and familiarize yourself with all the operational aspects, installation and care of your new Envi Heater. For your own records, please attach a copy of your sales receipt to this manual. Also, write the store name/location, date, and serial number in the warranty section on the page 11.

Models Covered by This Manual

Model Type	**500 Watt - 120 Volt Models**	**500 Watt - 220 Volt Models**
Plug-In with Thermostat	SE5012P	-
Hardwired with Thermostat	SE5012D	SE5022D

Missing parts? Have questions or need help?

(PLEASE DO NOT RETURN TO RETAIL STORE BEFORE YOU CALL THE ENVI HELP DESK)

We are here to help you with any questions you might have. Before you call for help though, please read this manual as it contains instructions to help you to install, operate and maintain your heater properly. If you still need help please call the Envi Help desk in the USA/Canada Toll Free @ (800) 807-0107 or if calling from outside the USA call +1 (281) 516-1577.

Features & Benefits

- American Owned & Built with 3 year Warranty (USA)
- ISO 9001 Quality Certification.
- Patented, efficient "Stack Convection" Technology
- Adjustable Temperature control with simple operation.
- Wall-Sens™ Technology, safety cut off feature.
- Internal Safety Locking Screw Feature, locks heater to wall using provided allen key tool.
- Convenient cordset storage inside the heater.
- Turn down the central heat thermostat and use envi heaters where needed – to save on heating bills.
- Environmentally friendly - low power consumption.
- Eliminates hot and cold spots where central heat is ineffective.
- Ultra Safe – cool to the touch (90ºF/32ºC) can remain in use, unattended 24/7.
- Healthy – won't blow dust and allergens around the room or dry out the air.
- Totally silent fanless technology.
- Auto-dimming power light for dark bedrooms.
- Easy Installation – no drill required for mounting to wall.
- Slim – space saving design, only 2in (5cm) thin.
- Long life – No moving parts, crack resistance surface
- 120volt and 220volt hardwired models available.

Important Instructions

HEATER WILL NOT OPERATE UNLESS WALL MOUNTED

When using electrical appliances, basic precautions should always be followed to reduce the risk of fire, electric shock, and injury to persons, including the following:

1. Read all instructions before installing or using this heater.
2. Extreme caution is necessary when any heater is used by or near children or invalids, or when the heater is left operating and unattended.
3. Do not operate any heater after it malfunctions. Disconnect power at service panel and have heater inspected by a reputable electrician before reusing.
4. For plug-in heaters, to disconnect, push power button to turn heater off (the power indicator light will turn off), then remove plug from outlet. Pull firmly on the plug, do not unplug by pulling on the cord.
5. Connect to properly grounded outlets only.
6. For hardwired heaters, to disconnect, turn controls to off, and turn off power to heater circuit at main disconnect panel (or operate internal disconnect switch if provided).
7. Do not insert or allow foreign objects to enter any ventilation or exhaust opening as this may cause an electric shock or fire, or damage the heater.
8. To prevent a possible fire, do not block air intakes or exhaust in any manner.
9. A heater has hot or arcing parts inside. Do not use in areas where gasoline, paint, explosive and/or flammable liquids are used or stored. Keep unit away from heated surfaces and open flames.
10. Use this heater only as described in this manual. Any other use not recommended by the manufacturer may cause fire, electric shock, or injury to persons.
11. Use only for the intended household or office uses as described in this manual. Any other use not recommended by the manufacturer may cause fire, electric shock, or injury to persons. The use of non-recommended attachments sold by unauthorized dealers may cause hazards.
12. Do not use outdoors.
13. This heater is intended for use as a WALL MOUNTED heater only. Failure to properly secure the heater to a flat, level and vertical wall may result in heater malfunction and/or property damage.
14. This heater will not operate (will not power on) unless it is attached to a wall using the supplied wall mounting clips which engage the internal "wall-sens" safety switch.
15. DO NOT attempt to repair or replace any electrical or mechanical part on this unit. Doing so will void your warranty. The inside of the unit contains no user serviceable parts. Qualified personnel should perform all servicing only.

Save these instructions

Installation Instructions

WHAT IS IN THE BOX

- 500 Watt Envi Wall Mounted Heater
- Owners Manual
- 2 x Mounting Clips
- 2 x Drywall Anchors / 2 x Masonry Anchors
- 2 x #8 Mounting Screws
- Locking Bar Screw and 3/32" Hex Allen Key tool
- Knockout Hole Grommet (hardwired models only)
- Wall Anchor Marking Template. Template holes are marked on the unfolded edges of the packaging insert frame.

WALL MOUNTING

Remove the heater, mounting kit, and packaging insert frame from the box. Keep the packaging materials for future use.

1. Unwrap and flatten the sides of the packaging insert frame (mounting template) and stand the template on the floor. The sides of the template have pre-punched holes to mark the heater mounting height for either 6" or 8" (15 or 20cm) from the bottom of the heater to the floor. Choose either mounting height, and mark three hole locations on the wall. (see Fig. 1). The top two hole locations are for the mounting clips and the bottom location is for a third mounting screw hidden inside the bottom access door as described in step 5 below. NOTE: Most installers use the internal locking bar screw ONLY instead of the bottom mounting hole.

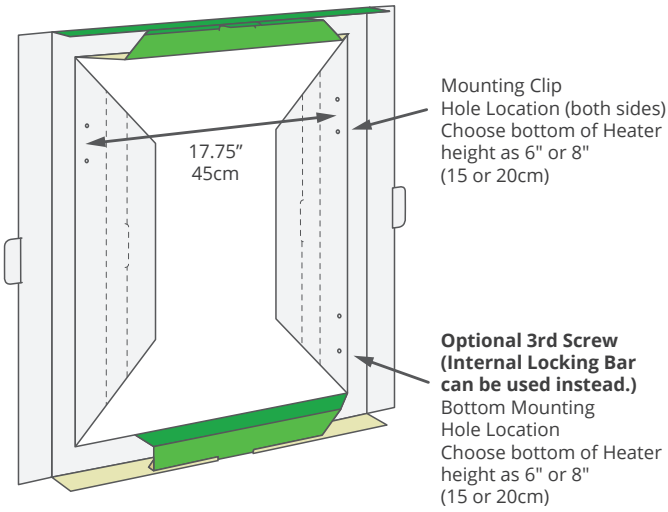

Fig. 1

Important Mounting Tips

1) Only use the bottom mounting screw if you do not intend to use the internal locking bar/screw mechanism.

2) The bottom mounting screw can be marked by hanging the heater first, then using the heater as a template.

3) The right hand side of the heater must be securely and firmly pushed down on the clip to engage the "wall-sens" power cut-off switch inside the heater. Align this side of the heater first, to ensure the switch is activated. For uneven walls, a thin washer can be used to widen the gap behind this clip to help seat the heater properly.

4) The heater can be mounted at other heights besides 6" or 8". To do this, measure where you want the bottom of the heater to be on the wall and then measure up an additional 13" (33cm) and mark your screw locations.

2. Screw the anchors (Fig. 2) into wall at the marked locations. The distance from the top screws to the floor should be approx. 19" to 21" (48cm to 53cm). If a stud is in the way, do not use the drywall anchor supplied, just drive supplied mounting screw directly into the stud. For masonry walls, use the masonry wall anchors provided and drill a 4.5mm (3/16inch) hole using a masonry drill bit (not supplied).

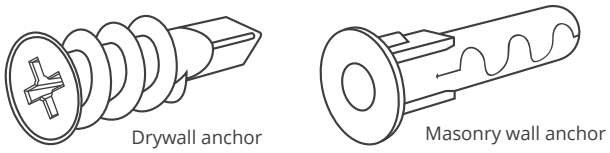

Fig. 2

3. Screw the two mounting clips (with arrow pointing upward) into the top two anchor locations and secure firmly to the wall anchors using the provided screws. (see Fig. 3). DO NOT overtighten. There should be a gap behind the mounting clip to hang the heater on.

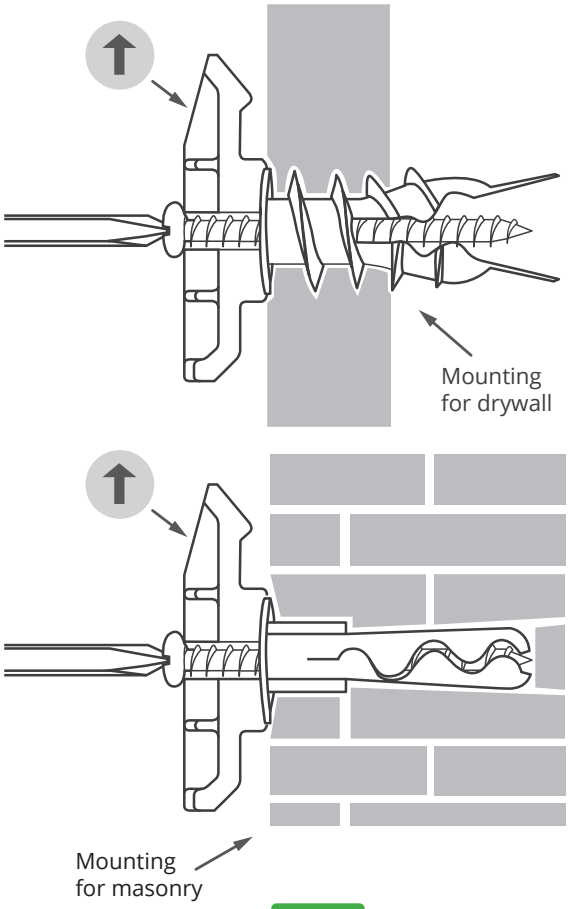

Fig. 3

4. If you plan on using bottom screw, remove the bottom access door before you mount the heater.

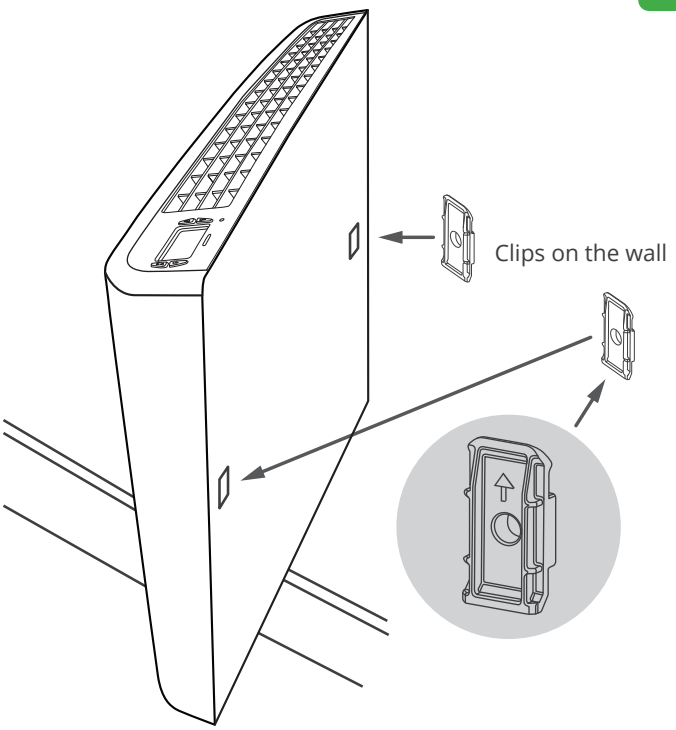

Fig. 5

5 Note: make sure you pre-install the Locking bar screw before you mount the heater. (See Fig. 6 below). Install heater on mounting clips (align right side first) and make sure to press down firmly on the heater to ensure a secure fit. You will hear it "snap" into place. (Fig. 5 above)

For additional information visit www.eheat.com

Installing Locking Bar for Permanent Attachment

Envi Wall-Mounted Heaters have an additional method to permanently attach the heater to the wall. A locking bar mechanism is built inside the heater, which is engaged by screwing an external locking screw into the bottom of the heater vent. The locking screw and Hex/Allen Key are both provided in the mounting kit. This locking bar method is an alternate method to the existing bottom screw installation procedure above, however many customers will find that the locking bar attachment method is sufficient by itself.

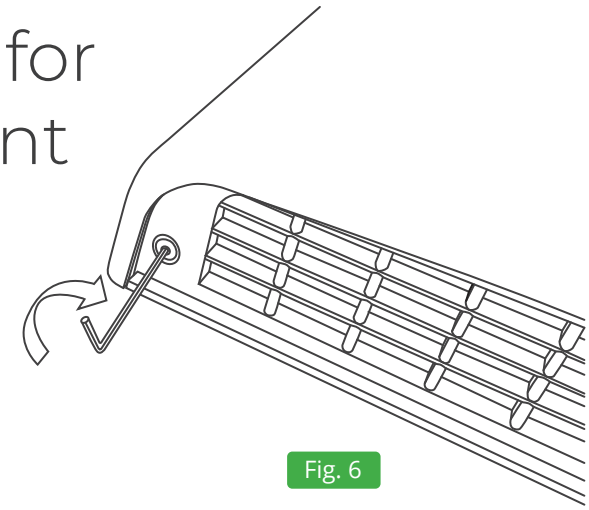

Fig. 6

1 **Installing the Locking Bar Screw (Fig. 6)** BEFORE YOU MOUNT THE HEATER TO THE WALL. Take the locking bar screw out of the mounting kit and while the heater is laying flat, use the Hex/Allen key provided to pre-install the screw in the hole at the left hand side of the bottom vent (Fig. 6). Twist the locking screw in about 3/8 of an inch but make sure you do not screw it in too far as it will obstruct the mounting holes at the back of the heater and prevent secure mounting.

2 **Mount the Heater.** Attach the heater to the wall by following the rest of the mounting instructions on previous page.

3 **Tighten Locking Screw** (Fig. 6) Follow the rest of the mounting instructions to ensure the heater is properly seated on the mounting clips and then tighten the locking screw to fix the heater to the wall. DO NOT USE A POWER TOOL! DO NOT OVERTIGHTEN, just turn the screw until the locking bar presses gently up against the left hand mounting clip inside the heater.

Congratulations, you have now permanently mounted your Envi Heater!

Hardwiring Instructions

WARNING! HARDWIRING OF AN ENVI HEATER MUST BE PERFORMED BY A LICENSED ELECTRICIAN. IMPROPER WIRING MAY RESULT IN FIRE, INJURY, OR DEATH. THE MANUFACTURER WILL NOT BE LIABLE FOR INCORRECT HARDWIRING OF ENVI HEATERS AND CONSEQUENCES THEREOF.

The Envi Heater is available in some regions as a hardwired model SE5012D and SE5022D.

The Envi Heater can be hardwired direct to a mains supply, branch circuit or it can be hardwired to a line voltage external thermostat of the same voltage as the heater (eg. 120v) or to an external switch or timer. Consult the instructions for each of these control devices for specific wiring instructions. The Envi Heater can also be wired as multiple heaters on the same circuit or controller. Please consult a certified electrician and ensure that all electrical work is done in accordance with applicable electrical and building codes.

CAUTION

To prevent short circuits and electrical shocks turn the power off at the main electrical panel before attempting the hardwiring installation or any repairs. If the internal power cable (cordset) is damaged it must be replaced by the manufacturer.

NOTE

This hardwired heater must be connected to the correct voltage circuit according to its model designation, ie. (SE5012D = 120volts, SE5022D = 220volts). Disconnect the power supply before making wiring connections to prevent electrical shock and equipment damage.

WIRING SCHEMATIC

NOTE: The following wiring schematic is for a single Envi Heater installation to the applicable ac mains supply circuit and assumes that the there are no external controls being wired to the heater. For wiring of external controls (thermostat/switches or timers) please consult the website www.eheat.com for examples of external control wiring instructions.

1. Determine the best wall mounting location of the Envi Heater in a room. If the proper electrical wiring and wall box already exists at a suitable height on the wall, then choose a suitable knock-out hole on the back of the heater (5 holes to choose from) and position the heater on the wall so that the knockout hole lines up with the electrical wall box. Refer to Fig. 9 for more details.

   If new heater circuit wiring and wall box is to be installed, then it is best to mount the heater first and then determine the corresponding location on the wall for the new electrical wiring wall box. When installing a new wall box, ensure it is at a proper location on the wall to allow the heater to remain at 6" to 8" (15cm to 20cm) or so above the finished floor level.

   Turn the power OFF at the main electrical panel to the heater circuit. Run the electrical wiring and secure it properly to the electrical box per applicable electrical and building codes. (NOTE: Although the Envi Heater has a low amperage draw (eg. 4amps@120v), the electrical code requires a minimum supply wire gauge to be used usually 12g, so make sure you check first.)

2. Mount the Envi Heater using the two mounting clips per the "Wall Mounting Instructions" (see page 4) contained herein to ensure that the heater is at the proper location on the wall and that the knockout hole is aligned with the supply wiring.

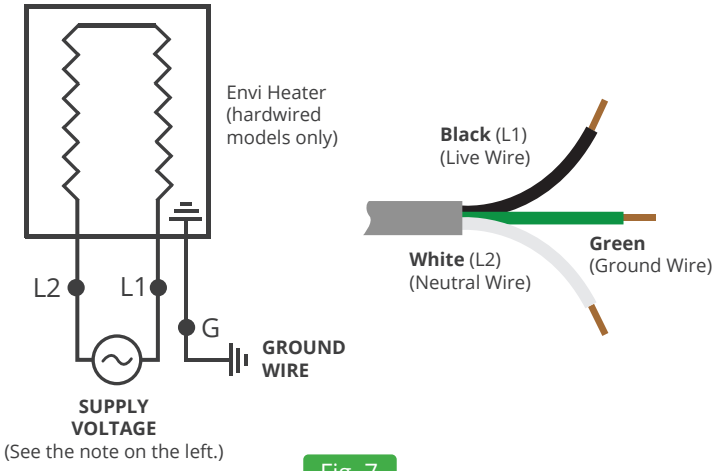

Fig. 7

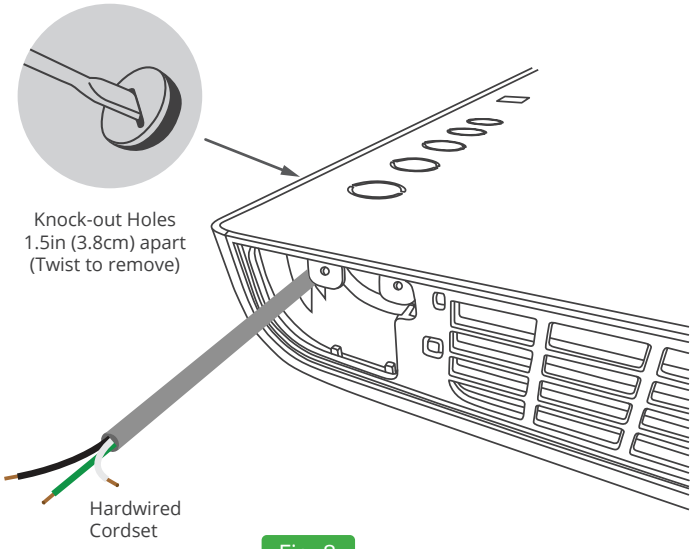

Fig. 8

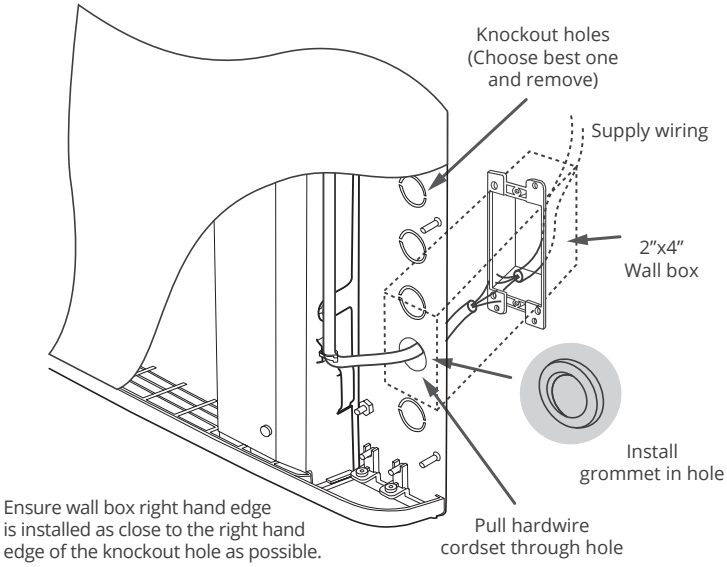

Fig. 9

3 Remove the Envi Heater from the wall to prep for the hardwiring steps. Pull the cordset through the knockout hole using pliers and install the supplied protection grommet. Strip wires to expose 5/8" of copper on all 3 of the cordset wires (see Fig. 9).

Install the bottom door supplied in mounting kit. Rotate and lay the heater on the ground so that the bottom right corner is facing up and the back of the heater is facing the wall (see Fig. 10). Connect the heater wires L1 (live) , L2 (neutral) and G (ground) to the corresponding supply wires in the wall box per the wiring schematic above.

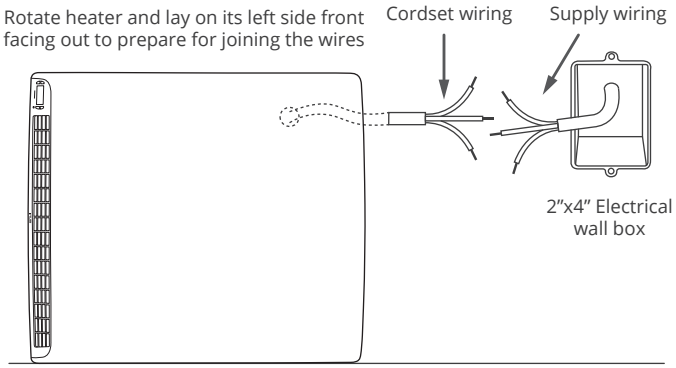

Fig. 10

4 Push as much of the connected wiring/nuts deep inside the wall box opening and the heater is sitting flush with no wiring trapped between the heater and the wall. Carefully lift the heater back onto the wall mounting clips that were installed earlier. Re-mount the Envi Heater to the wall, ensuring all three mounting screws are used and the Locking screw is tightened.

5 Turn the power ON at the main electrical panel to the heater circuit. Check that there are no obvious problems with the hardwiring to the heater (such as crackling noises, sparks or smoke) and if everything is okay, turn on the power to the heater by pressing the on/off button. If the wiring has been performed correctly, then the power indicator light will glow red.

ONLY CONNECT 120V SUPPLY TO 120V ENVI HEATERS.
IF YOU'RE NOT SURE IF YOU HAVE 120V OR 220V AVAILABLE DO NOT PROCEED!

220V (4 WIRE) BASIC HARDWIRING GUIDE FOR USA MODEL SE5022D

Please note that this is a very basic and "rough guide" and may not apply to every situation. The terms "110volt" and "220volt" are synonymous with 120volt and 240volt respectively. When a customer encounters existing 220 volt, four wire, supply wiring, there could be more than one way these wires might be configured, however the usual 220volt arrangement is as follows. Typically 220volt, 4 Wire supply wiring has a Black Wire and a Red wire, each of which are 110volt live legs. Sometimes these are two Black wires. There will sometimes be a White Wire which is usually a neutral wire used to power 110volt devices (do not assume this though, because it could be a thermostat leg or another ground wire). Lastly there should be a Green or bare copper wire is usually the ground wire. Did you catch how many times we use the words "usually" and "sometimes"? Be very careful and never assume!

220 VOLT SUPPLY WIRING	(CONNECT TO)	SE5022D ENVI HEATER CORDSET WIRES
Black Wire (Live 110volts)	→	Black Wire
Red or 2nd Black Wire (Live 110volts)	→	White Wire
Green or bare copper wire	→	Green Wire
White Wire (Not needed, cap this off)		

Did you know? 220volt supply (now known as 240volts in the USA) comes into a home from an outside transformer on two separate wires (legs) which have opposite phases or polarity. The electrical current alternates on one leg from +110volts to 0 volts and alternates from -110volts to 0 volts on the other leg (wire). The overall difference between the two legs when connected is 220volts. So, now you know where 220/240volts comes from!

Operating Instructions

HOW IT WORKS

The Envi Heater is designed with innovative "Stack Convection Technology" that effectively heats a room with minimal energy. The Envi's inner chamber simulates "stacks" of varying height, which boost airflow through the heater to achieve maximum efficiency. The end result is enhanced airflow at safe air temperatures, all without the use of a fan. The Envi heater will provide consistent, comfortable, silent heat without drying out the air or leaving cold spots in the room.

WALL-SENS™ SAFETY FEATURE

In addition to the overheat safety cut-off, the Envi Heater is equipped with an additional layer of safety to give you greater peace of mind. Wall-Sens™ technology means that in the event that the Envi heater is ever removed from the wall, power will be immediately cut to the heater. This of course means that the heater will not work if it is simply removed from its packaging and plugged into a wall outlet. It must be mounted properly (safely) and then plugged in (or hardwired) in order for it to be begin to heat.

ELECTRICAL GROUNDING

Plug-in models of the Envi Heater are for use on standard electrical circuits (eg. 120v for USA/Canada). The cord has a three-blade grounding plug. An adapter can be obtained at most hardware or electrical stores for connecting three-blade grounding type plugs to two-slot receptacles. The grounding lug extending from the adapter must be connected to a permanent ground such as a properly grounded outlet box. The adapter should not be used if a three-slot grounded receptacle is available.

DO NOT DEFEAT THE SAFETY PURPOSE OF THE GROUNDED PLUG.

OVERHEAT SAFETY FEATURE

This heater is equipped with an overheat safety feature. When the heaters internal components reach a certain temperature that could cause overheating and a possible fi re, the heater will automatically shut off . To reset the heater, unplug the heater power cord from the electrical outlet for 10 minutes. After 10 minutes, plug the heater into the electrical outlet and turn on using the heater's on/off switch located on the front of the unit.

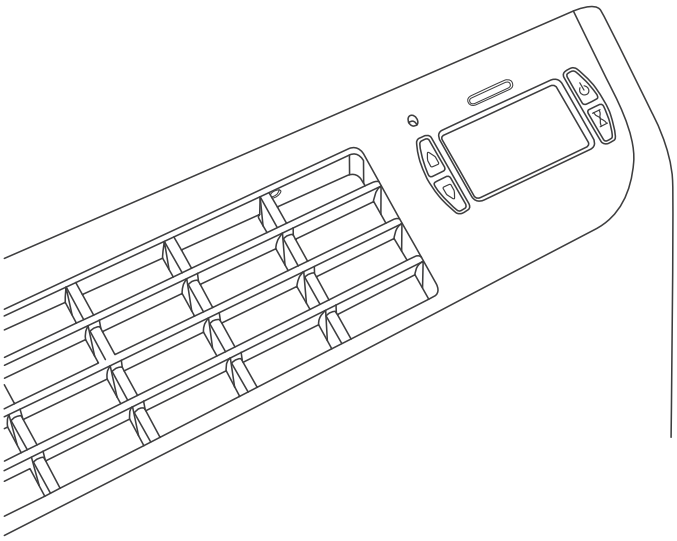

Fig. 11

OPERATING INSTRUCTIONS

Install the heater on a firm, level wall and plug the power cord into a grounded power outlet (or hardwire if applicable). The heater will only operate when it is properly attached to the mounting clips. Be sure to mount in upright position with the screen and buttons at the top of the heater.

Initial Operation

When the heater is initially powered on it will display the heater's SSID that you will use to connect the heater to the Smart Envi app. Please take note of this SSID. It can also be found in the Wi-Fi menu.

Press to power on

Press to raise set Temperature

Press to lower set Temperature

TIMER

Press to set Timer

Press to change the Timer in 30-minute increments.

Hold together for 3 seconds to enable and disable Child Lock

Hold down for 3 seconds to enable Auto Mode

MAIN MENU

Hold to enter Menu

Press to scroll through settings

Press to select

Press to go back

Auto Mode

You can set a schedule for your Smart Envi heater to automatically heat to a set temperature during those times. You can set a weekend and weekday schedule for four different times throughout the day.

Use to select and set the different time and temperature settings.

Update

This setting allows you to check for updates manually.

Display Settings

- Brightness
  - You can choose to set the screen brightness of your Smart Envi heater either manually or use the built-in light sensor to adjust the brightness.

Settings

- Temp Unit – You can change the displayed temperature unit to either be °F or °C.
- Hysteresis – You can change the hysteresis range between 2°-5°.
- Night Light – In auto mode the built-in night light comes on when it is dark in the room.
- Wi-Fi
  - AP Mode

    Enable AP Mode – You can press to enable or disable disable the Smart Envi's built-in access point.

    SSID – You can press to view the SSID that the heater broadcasts for connection to the Smart Envi app.
  - Wi-Fi Connection

    Network Name – You can view the SSID that your Smart Envi heater is connected to.
  - Reset

    Press to select the reset option then

    Press again to confirm.

    This allows you to re-pair the heater to the Smart Envi app.
- Time and Date
  - Auto – This allows your heater to use the internet to set the time. This is the recommended time setting.
  - Timezone Offset – You can manually set the timezone offset for your heater.
  - Manual – You can use this menu selection to manually set the time on the heater.

The heater is equipped with an innovative auto dimming feature that dims the power light in a darkened room to help light sleepers. The heater automatically detects when the light level in a room drops and then dims the power light.

The plug-in cordset of the Envi heater can be stored inside the bottom access door. Determine how much cordset you require to extend out of the heater.

Remove the heater from the wall, and remove the bottom access door. Carefully push the excess cordset inside the heater (use a wooden ruler or similar) and replace the bottom access door. Re-install the heater to the wall and plug-in the cordset to continue using your heater. For more information please visit the installation web page of www.eheat.com

OPTIMAL OPERATING CONDITIONS

To get the most out of your Envi Heater, please follow these helpful hints:

1. **VERY IMPORTANT!!! For optimal performance in a room, close all windows and doors and for first time use, leave on for 48 - 72 hrs.** This will allow the room to reach equilibrium temperature while the heat is gradually building up.

2. For optimal performance, mount the heater on an interior wall with the bottom of the heater 6" to 8" (15 to 20cm) from the floor. For smaller rooms this can be increased with little detriment, however try to keep the bottom of the heater a maximum of 18" (46cm) from the floor.

3. The 500 Watt Envi heater is designed to heat rooms 130 to 150 ft² feet in size (12m² to14m²). This equates to a 10ft x 14ft room size (3 x 4meters). Of course, this will vary depending on a number of factor, including outdoor temperature, room insulation, room draftiness, room objects, etc.

4. To save energy and to reduce your heating bills, place the heater in a room or area that needs extra heat instead of raising the thermostat on your central heating system. This heater will function very well as both a sole source of heat or as an additional heating source that can easily maintain the temperature in most rooms and attached bathrooms if the correct number of Envi heaters are installed. There is no need to increase the heat in the entire house when you only need comfort in the room in which you are currently located.

5. We highly recommend that our customers weatherize their homes or offices to further reduce their heating bills. Simple tasks such as replacing weather stripping around doors and windows, caulking doors and window seams, sealing attics and basements properly, and adding more insulation to your walls and ceiling will help further to reduce heating costs.

Care & Maintenance Instructions

CLEANING

1. Unplug the unit and let it cool completely.
2. To remove dust from the Envi heater, use a soft cloth on the exterior and use a compressed air can to blow dust through the top vent of the heater out the bottom.
3. To remove marks or stains from the heater, the front outer shell can be cleaned with a soft, damp cloth. You may use a mild detergent if necessary. After cleaning, dry the unit with a soft cloth.
   CAUTION: Do not let liquid enter the heater.
4. Do not use alcohol, acetone based cleaners, gasoline, abrasive powders, furniture polish, or abrasive or rough cloths or brushes to clean the front of the heater. This may cause damage or deterioration to the surface.
5. Do not immerse the heater in water.
6. Wait until the unit is completely dry before using again.
7. Some customers, over a long period of time may experience "dirty marks" on the wall above the heater. This is caused by smoke from tobacco products or candles being drawn into the heater and passed out the top. Over time this may leave dirty marks above the heater. The wall is not damaged and can easily be washed using appropriate cleaning products such as a magic eraser sponge.

STORAGE

Store the heater in a cool, dry location when not in use. However, the Envi Heater is a slim, attractive wall mounted heater than can be left mounted on the wall – all year round!

Trouble Shooting

If the heater will not operate, please check the following before calling for help with technical questions:

1. The number one trouble shooting tip is to check that the internal, electrical safety switch (Wall-Sens™) is being engaged. The heater **WILL NOT OPERATE AT ALL** if this switch is not engaged. This problem occurs when the right hand side of the heater is not pushed down far enough between the gap between the wall and the mounting clip. The mounting clip can become squished if it is screwed in too hard. Uneven walls can also cause the same mounting/wall switch problems.
2. Check if the power cord is plugged into an electrical outlet and the heater is set to ON by confirming the light on the top vent is lit. If not, plug in the heater and press the on/off power switch.
3. If the heater has been hardwired, consult an electrician to check that all connections have been made correctly. Make sure that you hardwire the correct voltage. Many people do not understand how to work with 220volt wiring. Always triple check the voltage and the model heater that was purchased as this is a common mistake and can lead to heater malfunction and pose a serious safety risk.
4. Check if there is electricity to the circuit by checking to make sure the breaker in the breaker box is in the "on" position.

Specifications & Certifications

PRODUCT SPECIFICATIONS

Power Rating:	500 Watts (All Models)
Volt & Amp Rating:	SE5012P/D Models = 4.17 Amps@120volts SE5022D Models = 2.27 Amps@220volts
Unit Size:	19.3in W x 2.2in D x 22.2in H (49.0cm W x 5.6cm D x 56.4cm H)
Net Weight:	10 lbs (4.5 kg)
Packaged Wt:	12 lbs (5.5 kg)

SAFETY LISTINGS

Conforms to UL Std:	UL 2021
Cert. to CAN/CSA Std:	C22.2 No. 46
Conforms to IEC Std:	60335-1 & 60335-2-30
Conforms to AS/NZS:	60335.1 & 60335.2.30

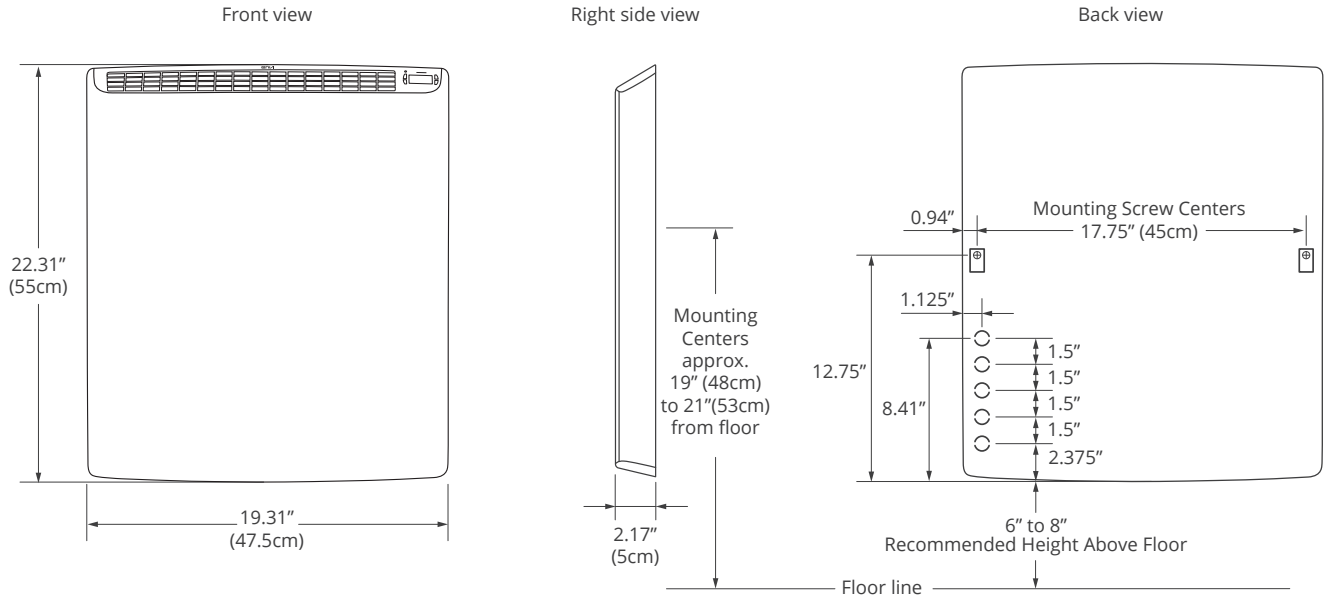

Warnings and Statements

FCC ID: 2AUA4-SE5001A

FCC RF Exposure Statement

This device meets the FCC requirements for RF exposure in public or uncontrolled environments.

This device complies with FCC part 15 Rules. Operation is subject to the following two conditions: 1. This device may not cause harmful interference and 2. This device must accept any interference received, including interference that may cause undesired operation.

FCC Warning

Changes or modifications not approved by eheat, Inc. could void the user's authority to operate the equipment.

Note: This equipment has been tested and found to comply with the limits for Class B digital device, pursuant to part 15 of the FCC Rules. These limits are designed to provide reasonable protection against harmful interference in a residential installation. This equipment generates, uses and can radiate radio frequency energy and, if not installed and used in accordance with the instructions, may cause harmful interference to radio communications. However, there is no guarantee that interference will not occur in a particular installation. If this equipment does cause harmful interference to radio or television reception, which can be determined by turning the equipment off and on, the user is encouraged to try to correct the interference by one or more of the following measures:

- Reorient or relocate the receiving antenna
- Increase the separation between the equipment and receiver
- Connect the equipment into an outlet on a circuit different from that to which the receiver is connected.
- Consult the dealer or an experienced radio/TV technician for help.

ISED / Industry Canada (IC) statement (Canada)

IC ID: 26664-SE5001A

IC RF Exposure Statement

This device meets the IC requirements for RF exposure in public or uncontrolled environments.

Cet appareil est conforme aux conditions de la IC en matière de RF dans des environnements publics ou incontrôlée.

IC Warning

This device complies with Industry Canada license exempt RSS standard(s). Operation is subject to the following two conditions: 1. this device may not cause interference, and 2. this device must accept any interference, including interference that may cause undesired operation of the device.

Cet appareil est conforme avec Industrie Canada RSS standard exempts de licence (s). Son utilisation est soumise à Les deux conditions suivantes: 1. cet appareil ne peut pas provoquer d'interférences et 2. cet appareil doit accepter Toute interférence, y compris les interférences qui peuvent causer un mauvais fonctionnement du dispositive.

COMMERCIAL FIRE SAFETY COMPLIANCE & CALIFORNIA TITLE 24 CERTIFICATION

The Envi Heater is in compliance with the requirements of The Life Safety Code, NFPA 101 (2012), section 19.7.8. The Envi Heater is a fixed wall heater (not portable) and operates with low surface temperatures and is thus suitable for commercial use in Elderly Care, Childcare, corporate and government facilities. The Envi Heater is also compliant for California Title 24 use in Residential New Construction, Alterations and Additions. Contact the manufacturer for more information if needed.

Warranty & Contact Info

THREE YEAR LIMITED WARRANTY

1. The manufacturer warrants the accompanying Envi Heater to be free of defects in material and workmanship for the applications specified in its operation instructions for a period of THREE (3) years from the date of original purchase in the United States of America and Canada. If the unit exhibits a defect in normal use, the manufacturer will, at its option, either repair or replace it, free of charge within a reasonable time after the unit is returned during the warranty period.

2. As a condition to any warranty service obligation, the consumer must present a copy of the original purchase invoice.

3. THESE WARRANTIES DO NOT APPLY FOR:
- Damage, accidental or otherwise, to the unit while in the possession of a consumer not caused by a defect in material or workmanship.
- Damage caused by improper installation or connection to incorrect supply voltage.
- Damage caused by consumer misuse, tampering, or failure to follow the care and special handling provisions in the instructions.
- Damage to the fi nish of the case, or other appearance parts caused by wear.
- Damage caused by repairs or alterations of the unit by anyone other than those authorized by the Manufacturer.
- Freight and Insurance cost for the warranty service.

4. ALL WARRANTIES, INCLUDING ANY IMPLIED WARRANTY OF MERCHANT ABILITY ARE LIMITED TO A THREE-YEAR DURATION OF THIS EXPRESS LIMITED WARRANTY. THE MANUFACTURER DISCLAIMS ANY LIABILITY FOR CONSEQUENTIAL OR INCIDENTAL DAMAGES AND IN NO EVENT SHALL THE MANUFACTURERS LIABILITY EXCEED THE RETAIL VALUE OF THE UNIT FOR BREACH OF ANY WRITTEN OR IMPLIED WARRANTY WITH RESPECT TO THIS UNIT.

5. Note: This warranty does not renew or extend with a replacement product. All warranties are from the date of the original product purchase.

6. This warranty covers only new products purchased from our authorized dealers or retailers. It does not cover used, salvaged, or refurbished products.

7. As some states do not allow the limitation or exclusion of incidental or consequential damages, or do not allow limitation on implied warranties, the above limitations and exclusions may not apply to you. This warranty gives you specific legal rights, and you may also have other rights that vary from state to state.

Manufacturer's Contact Information

eheat, Inc.

Houston, TX, United States of America | cs@eheat.com | Toll Free 800-807-0107 | www.eheat.com

REGISTRATION DETAILS

Store Name:	
Location:	
Date Purchased:	
Serial # (on back):	

envi

© 2018 eheat, Inc.

Toll Free 800-807-0107 www.eheat.com