AQP

Owner's Manual

DASHCAM M2

01 English

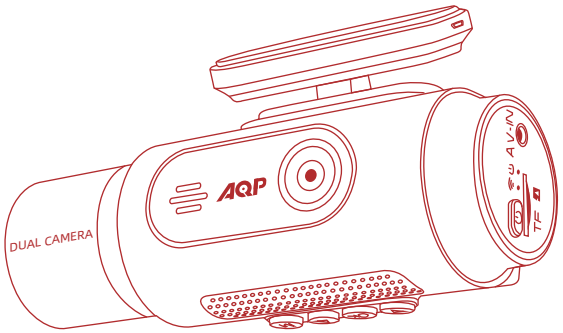

1 AQP M2 Dash Cam

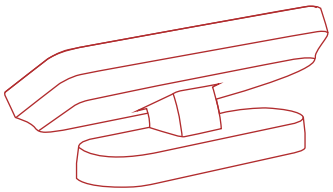

2 GPS Module

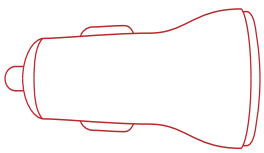

3 2-Port USB Car Charger

4 Trim Removal Tool

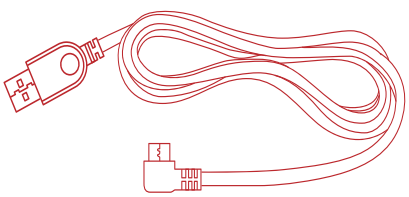

5 Mini USB Charging Cable (10ft)

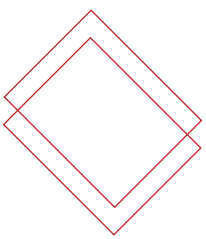

6 2*3M Adhesive Mount

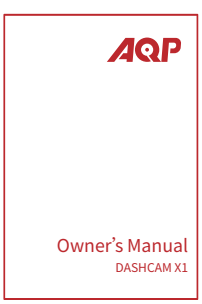

7 Owner's Manual

8 After sales card

Safety Instructions

Please read and understand all instructions before using this product. If damage is caused by the failure to follow the instructions, the warranty does not apply.

- Keep these instructions.
- Do not drop, puncture or disassemble this product.
- This product shall not be exposed to dripping or splashing.
- Avoid long exposure to direct sunlight, which may cause damage.
- Exposing this product to open flames may cause explosion.
- Use original accessories only.
- Do not install this product where it will block the driver’ s view of the road or the deployment of the airbag.
- Keep your attention on the road. Do not operate the controls of this product while driving.
- Ensure the camera lens is kept clean and there is nothing to block the lens.
- Set up time and date accurately before using this product.
- Do not use the charger if the cord is damaged or broken.
- Remove this product from your vehicle when not in use for a long period.
- Keep out of reach of children.
- Use clean, soft cloth to clean. Do not use any corrosive cleaner/oil to clean.
- The Company is NOT responsible for the loss of any data/ content during operation.

At a Glance

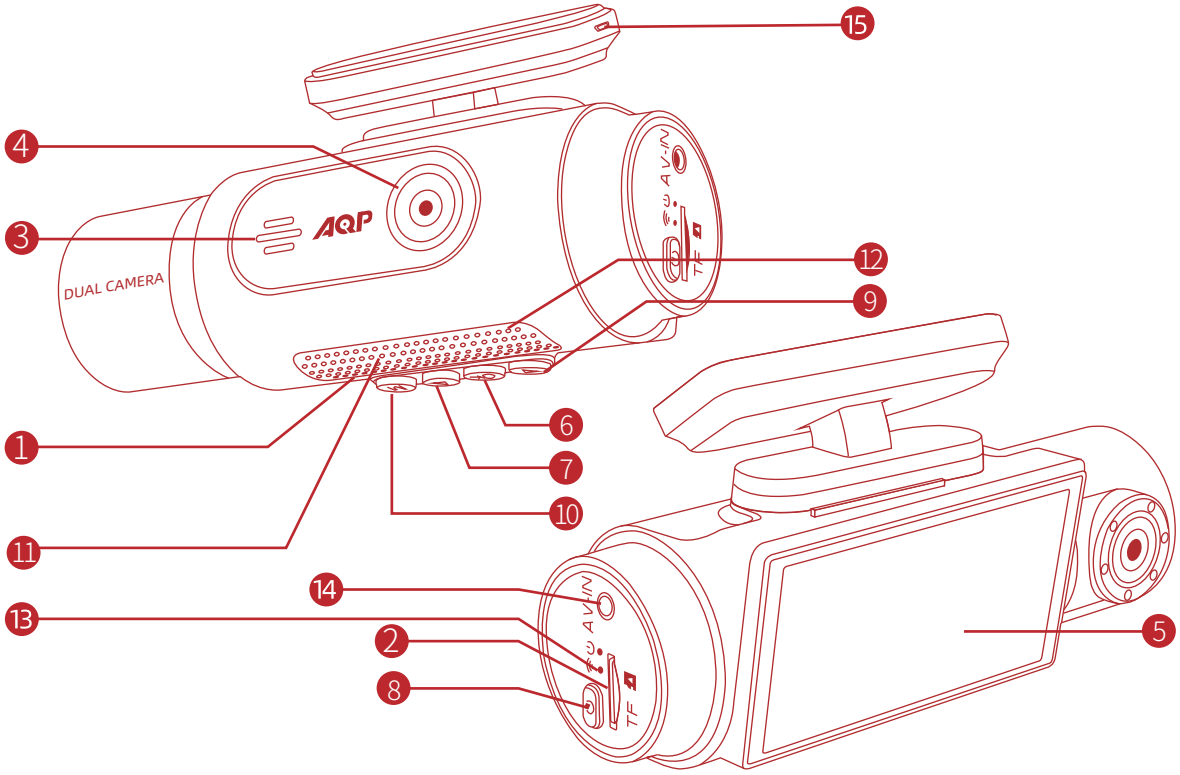

1. Reset button
2. TF card slot
3. Microphone
4. Camera lens
5. LCD screen
6. Confirm button
7. Next track
8. Switch button
9. Previous piece
10. Menu button
11. Air vent
12. Speaker
13. LED indicator

    Charging indicator: red, charging is always on, and fully on and off.
    Recording indicator: blue, steady on in preview state. Flashing during recording, flashing every second.
    WIFI indicator: Orange, blinking when not connected when WIFI is turned on, flashing once per second, connection is successful, and it is always on.
14. AV interface
15. Mini USB charging port

Inserting Memory Card

Do not remove or insert microSD / TF card when this product is powered on, which may damage the card.

For reliable operation, use a Class 10 microSD / TF card. For a 64GB/128GB card, format it before using. It is recommended to format the card regularly.

Card Capacity	3840*2160 30fps	2560*1440 30fps + 1920*1080 30fps	1920*1080 30FPS+ 1920*1080 30fps
32GB	177min	217min	355min
64GB	354min	434min	710min
128GB	708min	869min	1420min

The above data is for reference only. It is subject to actual usage.

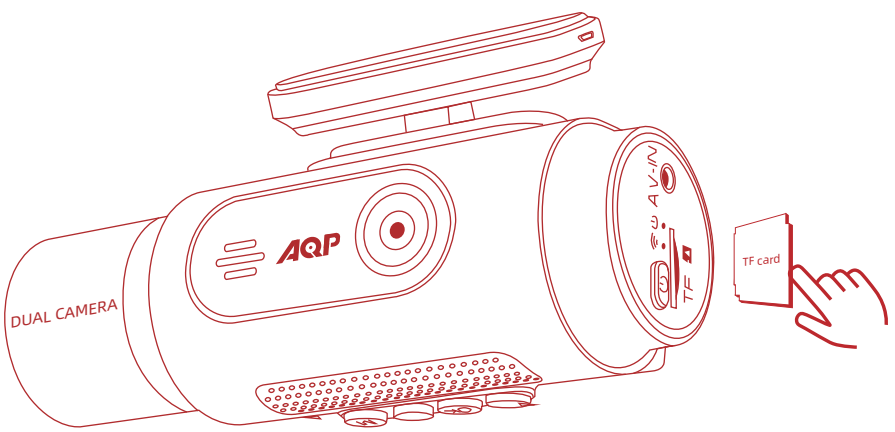

1. Insert the metal contacts towards the back (One side of front camera) of the driving recorder. Please press hard and click.
2. To remove the card, gently push its top edge inward until it clicks, and then pull it out of the slot.

Installing Your DashCam

- Never install this product while driving.
- Install this product near the rear-view mirror to obtain the best open-field view. Do not install in a location that will obstruct your required driving view.
- Make sure that the lens is within the wiping range of the windscreen wiper to ensure a clear view even when it rains.
- Do not touch the lens with your fingers. Finger grease may be left on the lens and will result in unclear videos.
- The mount is adhesive and may be destroyed if it is removed from the windshield.

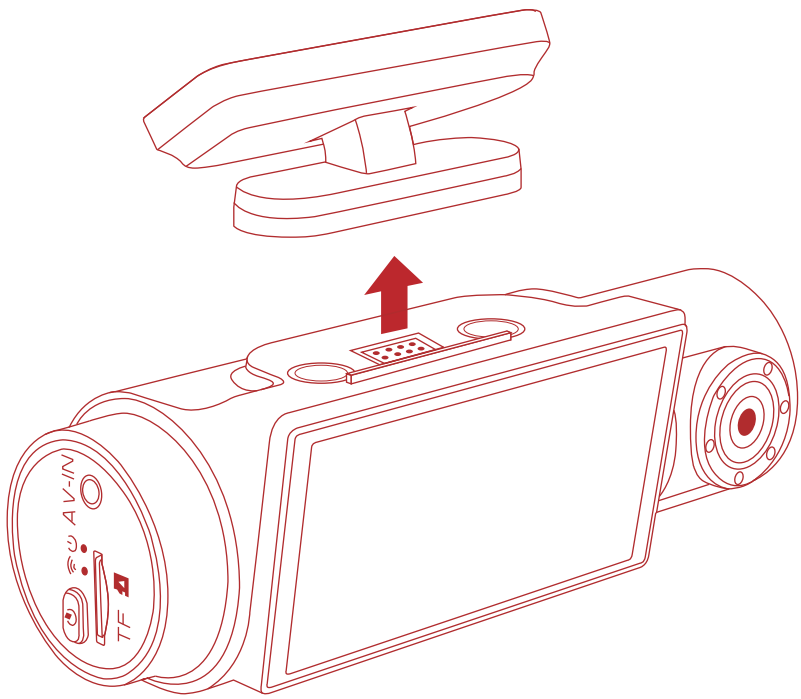

1 Attach the DashCam onto the mount.

2 Select a location (A or B) on the windshield behind the rear-view mirror, clean with clear water and make it fully dry.

3 Remove 3M adhesive sticker and firmly affix the mount onto the windshield.

Use the crowbar to press and hide the charging cable into the seams and weatherstrips around the edge of the dashboard.

5 Adjust the lens viewing angle to ensure that it is aligned with the road ahead.

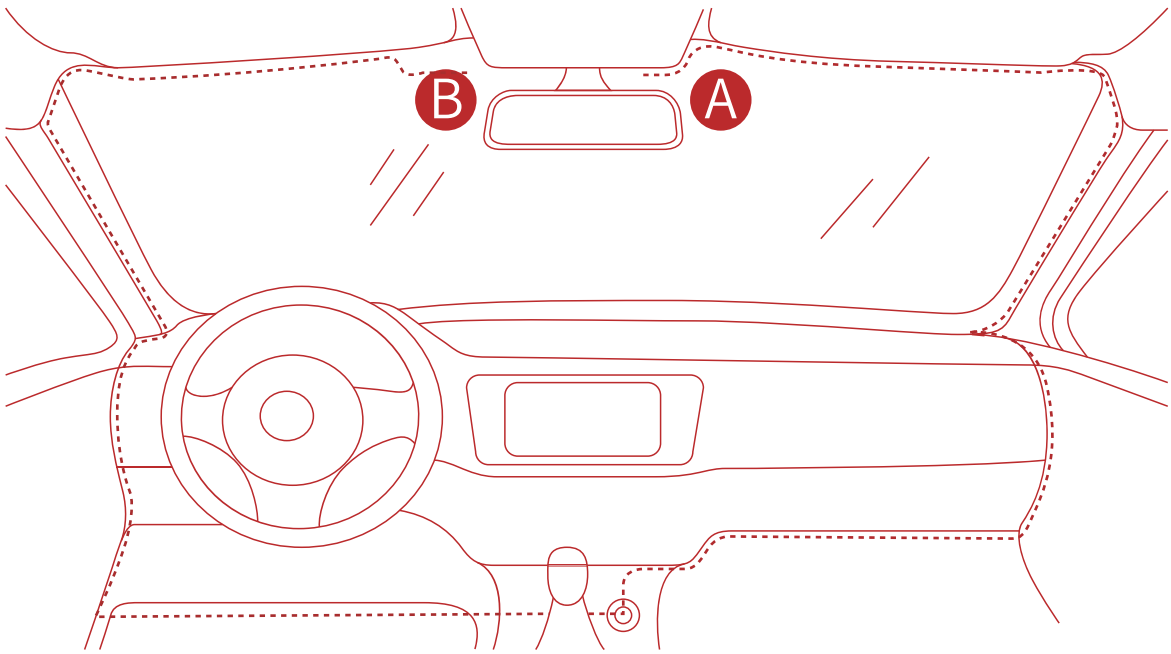

Connecting to Power

1. Connect the car charger and DashCam by using the charging cable.

2. Plug the other end of the car charger to your vehicle’ s cigarette lighter socket.

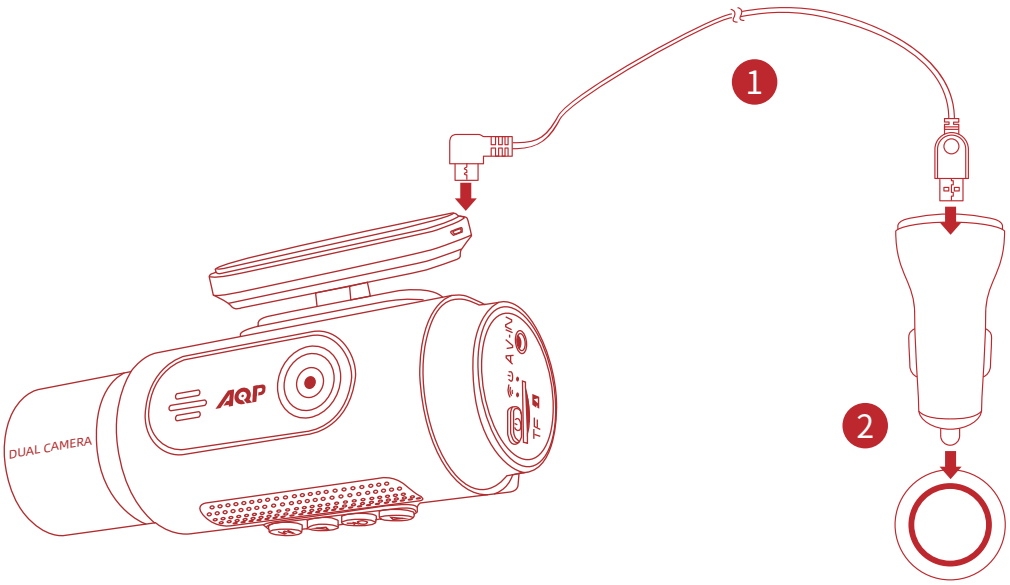

3. Once the car engine is started, DashCam will automatically power on and start recording. Once the car engine is shut down, DashCam automatically saves the recording and turns off within 3 seconds.

Downloading AQPCAM App

Search "AQPCAM" in App Store or Google Play to Download.

GET IT ON Google Play

Download on the App Store

Connect DashCam with Smartphone

When successfully connecting with your smartphone via built-in Wi-Fi, you can s ave and playback the driving recording videos on your smartphone. You can also change settings of the DashCam via AQPCAM app.

- After successful connection, please set up on the mobile phone.
- Android phones do not have access to the Internet data while connecting to DashCam's Wi-Fi. iOS devices can still work normally.

1. Click Menu button twice and select "WiFi"> "On" to enable WiFi on DashCam.
2. Enable WiFi on your smartphone, find “NVT_CARDV******” on the list and connect it, enter password (initial password:12345678) if required.
3. Follow the instructions on your smartphone to complete the connection.

Using Your DashCam

As a driver, you have full responsibility to drive safely and adhere to all applicable traffic regulations.

Record Videos

1. When connected to a car charger, DashCam automatically starts recording, The red dot on the upper left corner of the screen blinks, the current recording， Upper right corner duration is displayed, and the current date and time is displayed.

2. Press the OK button to start recording or stop recording. When the recording is stopped, long press ◁ to turn on WiFi, long press ▷ to turn on or off recording.

Protect the Current Recording

By default, DashCam uses asensor to automatically detect accidental collisions and protect the video file with duration of 30 seconds, and is displayed. This indicates that those recordings have been locked and will not be overwritten by new video clips.

To protect the current recording manually, tap M， Press OK to unlock

Playback Videos

The DashCam stops recording while viewing videos or settings.

1. Press the OK button to pause/start shooting, when the shooting mode is paused, long press the M button to enter the photo mode, and long press the M button again to switch to the playback mode. The playback icon is displayed in the upper left corner of the screen, long press the M button again to return to the shooting interface.

2. Select a video to playback

Touch Button	Function
⏻	Short press: Turn on / off the screen Long press: power on / off
M	Short press: menu status (switch menu),Video preview status (menu) , Recording status (manual lock) , Photo preview (menu) , Video playback (menu) Long press: None
◁	short press: menu status (upward selection) , Video preview status / video status (Switch back and forth) , Photo preview status (zoom in) , Video playback (previous file) Long press: Long press: video preview status / videoStatus / photo preview (on / offWiFi) , Video playback (rewind)
▷	short press: menu status (down selection) , photo preview (zoom out), video playback (next file) Long press: video preview status / video status / photo preview (open / close video sound), video playback (fast forward)
OK	Short press: menu status (confirm), video previewstatus (start video recording), video status (stop video recording), photo preview (photo recording), video playback (playback / pause) Long press: menu status (switch menu), video preview status (switch mode), photo preview (switch mode), video playback (switch mode)

System Setup

To adjust DashCam's settings, tap M

Menu Options	Description	Available Options
Video	Adjusting parameters of taking video	
Resolution	Set a desired video resolution.	QHDP30+FHDP30 FHD P30+FHD P30
Dual-lens Recording	Enable dual lens or single lens	Off/On
Loop Recording	Set the duration of each recording video clip.	Off/ 1Minute/3Minutes/5Minutes
WDR	Wide Dynamic Range	Off/On
G Sensor	Sensitivity for gravity helps to detect vibration and shock while driving and makes DashCam to respond appropriately	Off/Low/Medium/High
Exposer	Adjust exposure compensation value according to the environment	+0.0/ -1/3 / -2/3 / -1.0 / -4/3 / -5/3 / -2.0 / +2.0 / +5/3 / +4/3 / +1.0 / +2/3 / +1/3
Motion Detection	When the machine is working, it will start shooting videos if the motion is detected (It is recommended to turn off this function, which may generate a large number of recording files)	Off / On
Record Audio	Recording sound while recording video	Off / On
Date Stamp	Presentation date stamp when taking video or pictures	Off / On
Parking Guard	Parking guard eatures, File will be locked	Off / On

Setup		
WIFI	Use WiFi to connect Mobile Apps	Off/On
Date/Time	Time/date modification	YY/MM/DD
Auto Power Off	Time setting of automatic shutdown after pausing video	Off/1Minutes/3Minutes/ 5Minutes
Backlight	The screen turns off automatically, but will record normally	Off/1Minute/3Minutes/ 5Minutes
Beep Sound	Beep sound setting	Off/On
Language	Choose the language that is right for you	10 languages
Frequency	Choose the appropriate frequency according to local specifications	50HZ/60HZ
GPS	Turn on or off GPS positioning	Off/On
Timezone Setting	Choose the local timezone	UTC/GMT+12:00 ~ -12:00
Speed Unit	Current speed display unit	Speed Unit:KM/H / Speed Unit:MPH
Format	Clean up all videos and photo files	All date will be deleted:Cancel/Ok
Default Setting	Return to the original state	Return menu setting to defaults:Cancel/Ok
Version	Version number of current product	M2_20191219

Specifications

Specifications are subject to change without notice.

- Screen: 3" IPS (360x640)
- Camera sensor: Front facing Lens Sony Exmor IMX 307
  Rear facing Lens AHD1080P
- Camera lens: wide-angle lens 170°/150°
- Chipset: Novatek NT96670
- Power input: 5V = 650MA
- Max video resolution: Front/rear 1080P 30FPS (1920x1080)
- Video clip format: NTSC/PAL
- Wi-Fi: 2.4GHz Band
- Battery capacity: 200mAh
- Operating temperature range: -10°C-55°C
- Storage temperature range: -20°C-70°C
- Weight: Approx 132g
- Size: 122*50*69mm / 4.8*1.9*2.7 in

FAQ

1. Can not record?
   - Check if the memory card is inserted properly and there is enough free capacity.
   - Check the battery level.
2. Blurred image?
   - Use a clean, soft lens-cleaning cloth to gently clean the lens.
3. Malfunction or crash?
   - Short press the Reset button by using a sharp object to restart the machine.
4. Blank screen?
   - The screen saver is activated. Change settings to "Off" if required.
5. Fail to view and playback videos on your smartphone?
   - Check on your smartphone whether Wi-Fi is successfully connected to the DashCam.
6. Worry about the memory card is full?
   - Continuous loop recording allows to overwrite the old unlocked files.
7. Will my data be used when my smartphone is connected with DashCam?
   - No. Data will be used only if you share the saved videos via social apps.

Notice

This product complies with the radio interference requirements of the European Community.Operating Frequency Range: 2400-2483.5 MHz; Max Output Power: 15 dBm

This product is designed and manufactured with high quality materials and components, which can be recycled and reused.

This symbol means the product must not be discarded as household waste, and should be delivered to an appropriate collection facility for recycling. Follow local rules and never dispose of the product and rechargeable batteries with normal household waste. Correct disposal of old products and rechargeable batteries helps prevent negative consequences for the environment and human health. Removal of the built-in battery invalidates the warranty and may destroy the product. Always bring your product to a professional to remove the built-in battery.

FCC Caution:

Any changes or modifications not expressly approved by the party responsible for compliance could void the user's authority to operate this equipment.

This device complies with part 15 of the FCC Rules. Operation is subject to the following two conditions: (1) this device may not cause harmful interference, and (2) this device must accept any interference received, including interference that may cause undesired operation.

This device and its antenna(s) must not be co-located or operating in conjunction with any other antenna or transmitter.

NOTE: This equipment has been tested and found to comply with the limits for a Class B digital device, pursuant to Part 15 of the FCC Rules. These limits are designed to provide reasonable protection against harmful interference in a residential installation. This equipment generates, uses and can radiate radio frequency energy and, if not installed and used in accordance with the instructions, may cause harmful interference to radio communications. However, there is no guarantee that interference will not occur in a particular installation.

If this equipment does cause harmful interference to radio or television reception, which can be determined by turning the equipment off and on, the user is encouraged to try to correct the interference by one or more of the following measures:

-- Reorient or relocate the receiving antenna.

-- Increase the separation between the equipment and receiver.

-- Connect the equipment into an outlet on a circuit different from that to which the receiver is connected.

-- Consult the dealer or an experienced radio/TV technician for help.

To maintain compliance with FCC’ s RF Exposure guidelines, This equipment should be installed and operated with minimum distance between 20cm the radiator your body: Use only the supplied antenna.

FCC ID: 2AUAA-M2

Apple and the Apple logo are trademarks of Apple Inc., registered in the U.S. and other countries. App Store is a service mark of Apple Inc., registered in the U.S. and other countries. Google Play and the Google Play logo are trademarks of Google Inc.

"Android" is a registered trademark of Google Inc. in the United States and other countries.

"iOS" is a registered trademark of Apple Inc. in the United States and other countries.

12-month limited warranty

Lifetime technical support

Email:aqpsupport@aqpcam.com

AQP