Warranty Terms

THINKCAR provides 1-year free warranty for this tool. This warranty applies only to users who purchase the products through authorized channels. THINKCAR warrants damages due to product defects in materials or assembling. Damages to the equipment or components caused by abusing, unauthorized modification, using for non-designed purposes, operation in a manner not specified in the instructions, etc., are not covered by this warranty. The compensation for dashboard damage caused by the defect of this equipment is limited to repair or replacement. THINKCAR does not bear any indirect and incidental losses. THINKCAR will judge the nature of the equipment damage according to its prescribed inspection methods. No agents, employees, or business representatives of THINKCAR are authorized to make any confirmation, notice, or promise related to THINKCAR products warranty.

Thinkcar Tech Inc
Service Line: (909) 321-5665
Customer Service Email: support@thinkcarus.com
Official Website: www.thinkcarus.com
Products tutorial, videos, Q&A and coverage list are available on THINKCAR official website.

THINKCAR
LEADING TECH IN DIAGNOSTICS

THINKSCAN HD

Quick Start Manual

1 Product Descriptions

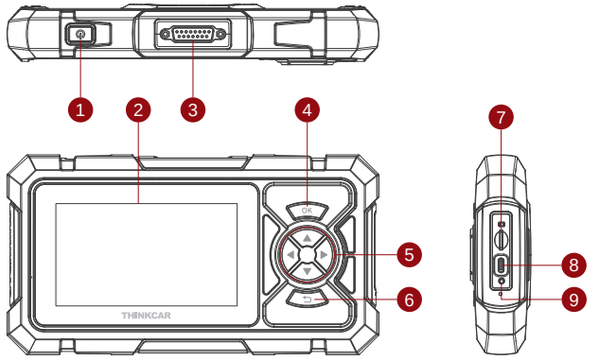

1. Power/Screen Lock Button: Press and hold for 5 seconds to turn on or off the device; Press once to lock or unlock the screen display.
2. Touch Screen: 5 inches (854*480 resolution)
3. DB15 interface: To plug in the diagnostic cable.
4. OK Button: Press to confirm the operation.
5. Selection Buttons: Up, Down, Left and Right direction selection.
6. Return Button: Return to the previous step.
7. TF Card Slot: Supports expandable SD memory card up to 128G.
8. TYPE-C interface: To plug in the charging cable. (Maximum 5V/2.5A input)
9. Factory Reset Button: Restore factory settings.

2 Technical Specifications

OS	Android 6
Screen	5 inch (854*480 resolution)
Memory	2GB
Storage	32GB
Wi-Fi	802.11 b\g\n 2.4G
Battery	3150mAh/3.8V
Working Environment	-10°C ~ 50°C (14°F ~ 122°F)
Storage Environment	-20°C ~ 60°C (-4°F ~ 140°F)
Working Voltage	5V
Working Current	≤2.5A

Supported Protocols: SAE J1939, SAE J1708, ISO 9142, ISO 14230, ISO 15765, K/L-Line, SAE-J1850 VPW, SAE-J1850 PWM, GM UART, CAN ISO 11898, Fault-Tolerant CAN, Lowspeed and Singlewire CAN, Highspeed CAN, Middlespeed CAN, SAE-J2610, CAN FD

3 How To Use

Connect THINKSCAN HD to your vehicle's DLC interface with the diagnostic cable. DLC is usually 12 inches away from the center of the instrument panel (dash), under or around the driver's side.

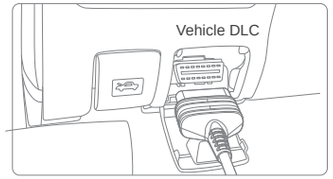

4 Turn on THINKSCAN HD

Hold the Power button for 5 seconds to turn the THINKSCAN HD on. The device will start initializing and enter the following page.

5 Language Setting

Select the system language from the languages list.

6 Time Zone Setting

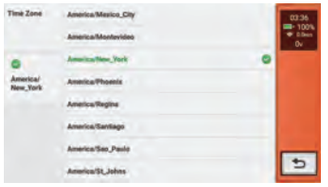

Select the time zone of your location.The system will automatically configure the time according to your selection.

7 Connect Wi-Fi

The device will automatically search and list all available Wi-Fi networks. Choose the one you want to connect and input the correct password if needed, to finish the setting.

8 Function Description

Covering major Heavy Duty vehicle brands, THINKSCAN HD features full system diagnosis functions including read DTC, clear DTC, read data stream, read ECU version, and view freeze frame, etc. Particularly, it can perform DPF Regeneration on most diesel vehicles.

1. Diagnosis

Select the vehicle brand, model, year, and enter the selected system to perform corresponding diagnostic functions.

2. DPF Regeneration

DPF regeneration is used to clear PM (Particulate Matter) from the DPF filter through continuous combustion oxidation mode to stabilize the filter performance.

DPF regeneration may be performed in the following cases:
a. The exhaust back pressure sensor is replaced.
b. The PM trap is removed or replaced.
c. The fuel additive nozzle is removed or replaced.
d. The catalytic oxidizer is removed or replaced.
e. The DPF regeneration MIL is on and maintenance is performed.
f. The DPF regeneration control module is replaced.

3. OBD

Scan engine module through OBD interface for both heavy duty and 12v vehicles.

a. Read and clear fault codes, turn-off malfunction indicator light (MIL)
b. O2 sensor test to check fuel efficiency and vehicle emission
c. Display freeze frame data and retrieve vehicle information
d. EVAP test for fuel tank system (Carbon canister test)
e. Display I/M readiness status (Non-continuously monitored system test)
f. Request On-Board Monitoring test results for specific monitored systems

4. Toolbox

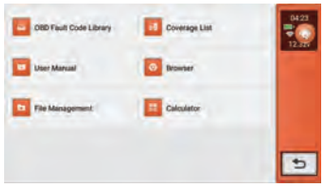

You can check or search DTC code library, vehicle coverage list and the instruction manual under this menu, and use some applications such as Google Browser, File Manager, and Calculator.

5. Feedback

If you encounter an unresolved problem or diagnostic software bug during diagnosis, you can revert the most recent 20 test records to our team. We will then analyze and troubleshoot it in a timely manner, to improve the quality of our products and user experience.

6. Update

Check and download available new software and applications.

7. File

You can check your diagnostic reports and data stream records under this menu.

8. Settings

You can modify or add related information in this module, or change settings after the initial setting is completed.

9 Customer Service

Pull down the task bar, find the customer service icon, click on it, and then human online customer service will appear to answer the questions you encounter during the use of the product, giving you a better experience of using the product.

10 FAQ

Q: How do I save battery power?

A: Please turn off the screen when not using the tablet, set a shorter standby time, and decrease the display brightness.

Q: Why my tablet cannot be turned on?

Possible reasons	Solution
The device has not been used for a long time, and the battery drains.	Charge it for more than 2 hours before turning it on.
The charger is faulty.	Change a charger to charge the device.

Q: Why my tablet cannot establish a connection with the vehicle?

Possible reasons	Solution
Poor electric contact with the vehicle's DLC port.	Plug out the connection cable, and then plug it in again.
Too low voltage of the vehicle battery.	• Recharge the vehicle battery. • Replace the vehicle battery if it is damaged.
Diagnostic cable faulty.	Contact THINKCAR after-sales service to get support.

Q: How do I connect my vehicle if it does not have the standard OBDII DLC port?

A: We supply 3 non-standard adapters with the product. Please select the appropriate one from them. If the 3 still don't match, you will need to buy a suitable one on the market, or use some jumper cables to establish the connection.

Q: Why does it show communication error with vehicle ECU?

A: Please confirm if the diagnostic cable is correctly connected with the vehicle and if the vehicle ignition switch is ON. If all are normal, please send us a Feedback along with vehicle information (Model, Year, VIN). Our service team will get back to you shortly.

Q: Why can't I enter the desired vehicle ECU system?

A: Please confirm if the vehicle is truly equipped with the ECU system, if the diagnostic cable is correctly connected, and if the vehicle ignition switch is ON.

Scan the QR code to get the detailed E-manual

FCC Warning

This device complies with part 15 of the FCC Rules. Operation is subject to the following two conditions: (1) This device may not cause harmful interference, and (2) this device must accept any interference received, including interference that may cause undesired operation.

Any Changes or modifications not expressly approved by the party responsible for compliance could void the user's authority to operate the equipment.

Note: This equipment has been tested and found to comply with the limits for a Class B digital device, pursuant to part 15 of the FCC Rules. These limits are designed to provide reasonable protection against harmful interference in a residential installation. This equipment generates uses and can radiate radio frequency energy and, if not installed and used in accordance with the instructions, may cause harmful interference to radio communications. However, there is no guarantee that interference will not occur in a particular installation. If this equipment does cause harmful interference to radio or television reception, which can be determined by turning the equipment off and on, the user is encouraged to try to correct the interference by one or more of the following measures:

-Reorient or relocate the receiving antenna.

-Increase the separation between the equipment and receiver.

-Connect the equipment into an outlet on a circuit different from that to which the receiver is connected.

-Consult the dealer or an experienced radio/TV technician for help.

The device has been evaluated to meet general RF exposure requirement. The device can be used in portable exposure condition without restriction.

IC Warning

This device complies with Industry Canada’s licence-exempt RSSs. Operation is subject to the following two conditions:
(1) This device may not cause interference; and
(2) This device must accept any interference, including interference that may cause undesired operation of the device.

The device has been evaluated to meet general RF exposure requirement. The device can be used in portable exposure condition without restriction.

Cet appareil est conforme aux CNR exemptes de licence d'Industrie Canada . Son fonctionnement est soumis aux deux conditions suivantes :
(1) Ce dispositif ne peut causer d'interférences ; et
(2) Ce dispositif doit accepter toute interférence , y compris les interférences qui peuvent causer un mauvais fonctionnement de l'appareil.

Le dispositif a été conçu pour répondre à la demande générale de radioexposition.