Test Laboratory: UnionTrust Date: 2019/8/18

System Check_B750

DUT: Dipole 750 MHz

Communication System: CW; Frequency: 750 MHz;Duty Cycle: 1:1
Medium: M750 Medium parameters used: f = 750 MHz; σ = 0.966 mho/m; ε_r = 55.2; ρ = 1000 kg/m^3

DASY4 Configuration:
- Probe: ES3DV3 - SN3090; ConvF(6.40, 6.40, 6.40); Calibrated: 2019/4/12
- Sensor-Surface: 3mm (Mechanical Surface Detection)
- Electronics: DAE4 Sn662; Calibrated: 2019/4/11
- Phantom: Triple Flat Phantom 5.1C; Type: QD 000 P51 CA; Serial: 1125
- ; Postprocessing SW: SEMCAD, V1.8 Build 186

system check/Area Scan (51x81x1): Measurement grid: dx=15mm, dy=15mm
Maximum value of SAR (interpolated) = 1.04 mW/g

system check/Zoom Scan (5x5x7)/Cube 0: Measurement grid: dx=8mm, dy=8mm, dz=5mm
Reference Value = 26.9 V/m; Power Drift = 0.002 dB
Peak SAR (extrapolated) = 1.36 W/kg
SAR(1 g) = 0.891 mW/g; SAR(10 g) = 0.584 mW/g
Maximum value of SAR (measured) = 1.04 mW/g

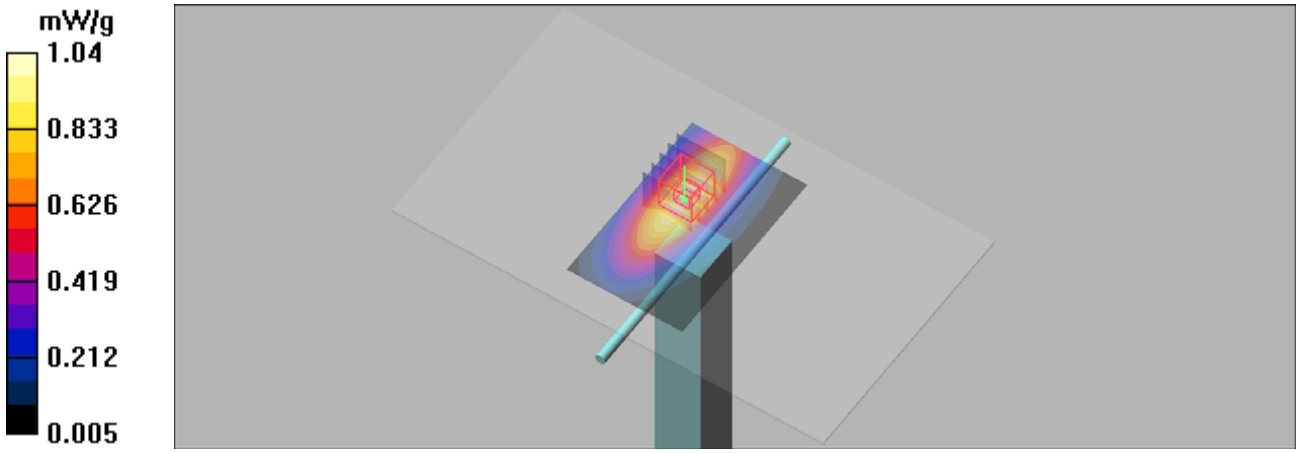

System Check_B835

DUT: Dipole 835 MHz

Communication System: CW; Frequency: 835 MHz;Duty Cycle: 1:1
Medium: B835 Medium parameters used: f = 835 MHz; σ = 0.98 mho/m; ε_r = 57.3; ρ = 1000 kg/m^3

DASY4 Configuration:
- Probe: ES3DV3 - SN3090; ConvF(6.18, 6.18, 6.18); Calibrated: 2019/4/12
- Sensor-Surface: 3mm (Mechanical Surface Detection)
- Electronics: DAE4 Sn662; Calibrated: 2019/4/11
- Phantom: Triple Flat Phantom 5.1C; Type: QD 000 P51 CA; Serial: 1125
- ; Postprocessing SW: SEMCAD, V1.8 Build 186

system check/Area Scan (51x81x1): Measurement grid: dx=15mm, dy=15mm
Maximum value of SAR (interpolated) = 0.111 mW/g

system check/Zoom Scan (5x5x7)/Cube 0: Measurement grid: dx=8mm, dy=8mm, dz=5mm
Reference Value = 10.4 V/m; Power Drift = 0.030 dB
Peak SAR (extrapolated) = 0.140 W/kg
SAR(1 g) = 0.094 mW/g; SAR(10 g) = 0.060 mW/g
Maximum value of SAR (measured) = 0.111 mW/g

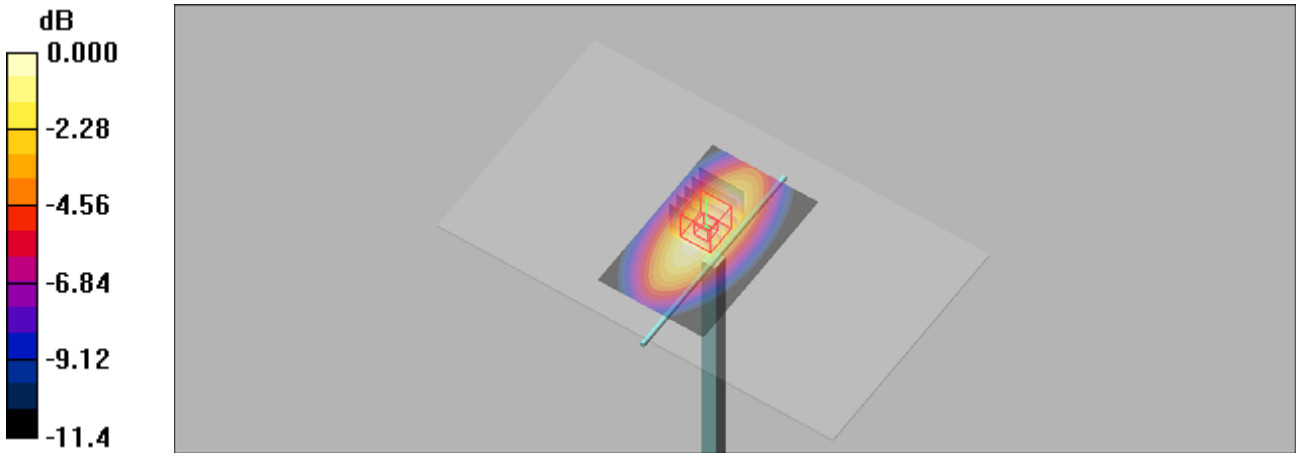

0 dB = 0.111mW/g

Test Laboratory: UnionTrust Date: 2019/8/17

System Check_B1750

DUT: Dipole 1750 MHz

Communication System: CW; Frequency: 1750 MHz;Duty Cycle: 1:1
Medium: B1750 Medium parameters used: f = 1750 MHz; σ = 1.47 mho/m; ε_r = 53.8; ρ = 1000 kg/m^3

DASY4 Configuration:
- Probe: ES3DV3 - SN3090; ConvF(4.95, 4.95, 4.95); Calibrated: 2019/4/12
- Sensor-Surface: 3mm (Mechanical Surface Detection)
- Electronics: DAE4 Sn662; Calibrated: 2019/4/11
- Phantom: Triple Flat Phantom 5.1C; Type: QD 000 P51 CA; Serial: 1125
- ; Postprocessing SW: SEMCAD, V1.8 Build 186

system check/Area Scan (51x71x1): Measurement grid: dx=15mm, dy=15mm
Maximum value of SAR (interpolated) = 0.511 mW/g

system check/Zoom Scan (5x5x7)/Cube 0: Measurement grid: dx=8mm, dy=8mm, dz=5mm
Reference Value = 15.1 V/m; Power Drift = 0.133 dB
Peak SAR (extrapolated) = 0.622 W/kg
SAR(1 g) = 0.381 mW/g; SAR(10 g) = 0.211 mW/g
Maximum value of SAR (measured) = 0.468 mW/g

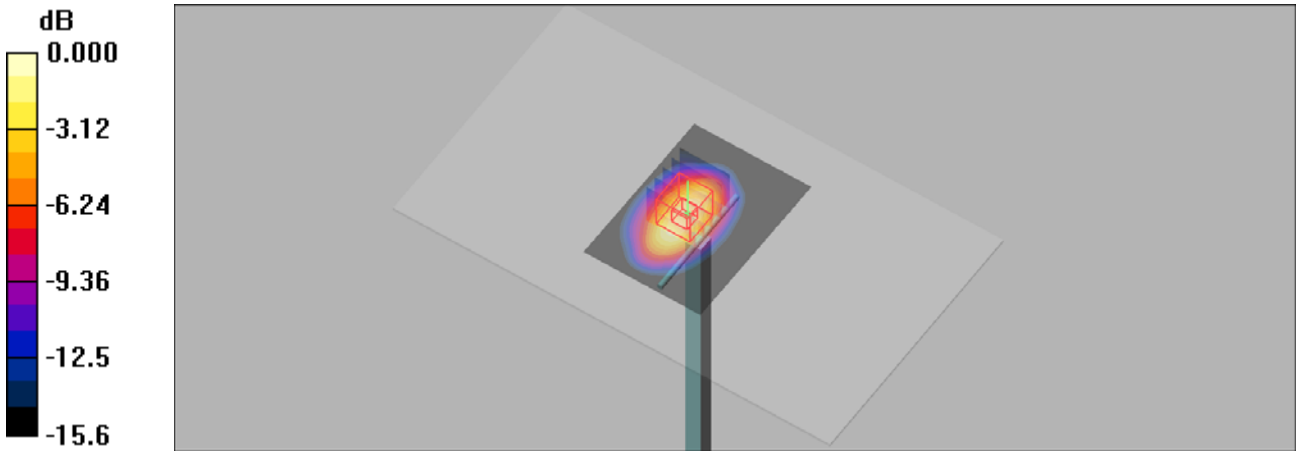

0 dB = 0.468mW/g

Test Laboratory: UnionTrust Date: 2019/8/17

System Check_B1900

DUT: Dipole 1900 MHz

Communication System: CW; Frequency: 1900 MHz;Duty Cycle: 1:1
Medium: B1900 Medium parameters used: f = 1900 MHz; σ = 1.55 mho/m; ε_r = 52.5; ρ = 1000 kg/m^3

DASY4 Configuration:
- Probe: ES3DV3 - SN3090; ConvF(4.79, 4.79, 4.79); Calibrated: 2019/4/12
- Sensor-Surface: 3mm (Mechanical Surface Detection)
- Electronics: DAE4 Sn662; Calibrated: 2019/4/11
- Phantom: Triple Flat Phantom 5.1C; Type: QD 000 P51 CA; Serial: 1125
- ; Postprocessing SW: SEMCAD, V1.8 Build 186

system check/Area Scan (51x71x1): Measurement grid: dx=15mm, dy=15mm
Maximum value of SAR (interpolated) = 0.570 mW/g

system check/Zoom Scan (5x5x7)/Cube 0: Measurement grid: dx=8mm, dy=8mm, dz=5mm
Reference Value = 17.4 V/m; Power Drift = 0.029 dB
Peak SAR (extrapolated) = 0.696 W/kg
SAR(1 g) = 0.404 mW/g; SAR(10 g) = 0.212 mW/g
Maximum value of SAR (measured) = 0.507 mW/g

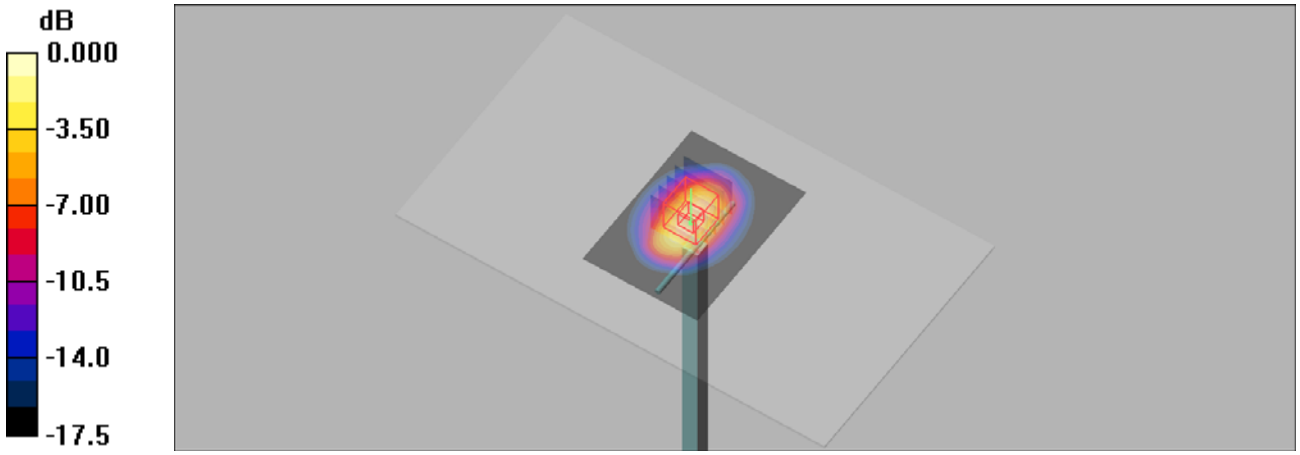

0 dB = 0.507mW/g

Test Laboratory: UnionTrust Date: 2019/8/17

System Check_B2450

DUT: Dipole 2450 MHz

Communication System: CW; Frequency: 2450 MHz;Duty Cycle: 1:1
Medium: B2450 Medium parameters used: f = 2450 MHz; σ = 2.01 mho/m; ε_r = 52.9; ρ = 1000 kg/m^3

DASY4 Configuration:
- Probe: ES3DV3 - SN3090; ConvF(4.47, 4.47, 4.47); Calibrated: 2019/4/12
- Sensor-Surface: 3mm (Mechanical Surface Detection)
- Electronics: DAE4 Sn662; Calibrated: 2019/4/11
- Phantom: Triple Flat Phantom 5.1C; Type: QD 000 P51 CA; Serial: 1125
- ; Postprocessing SW: SEMCAD, V1.8 Build 186

system check/Area Scan (51x71x1): Measurement grid: dx=12mm, dy=12mm
Maximum value of SAR (interpolated) = 0.774 mW/g

system check/Zoom Scan (5x5x7)/Cube 0: Measurement grid: dx=8mm, dy=8mm, dz=5mm
Reference Value = 18.9 V/m; Power Drift = -0.113 dB
Peak SAR (extrapolated) = 0.993 W/kg
SAR(1 g) = 0.504 mW/g; SAR(10 g) = 0.236 mW/g
Maximum value of SAR (measured) = 0.662 mW/g

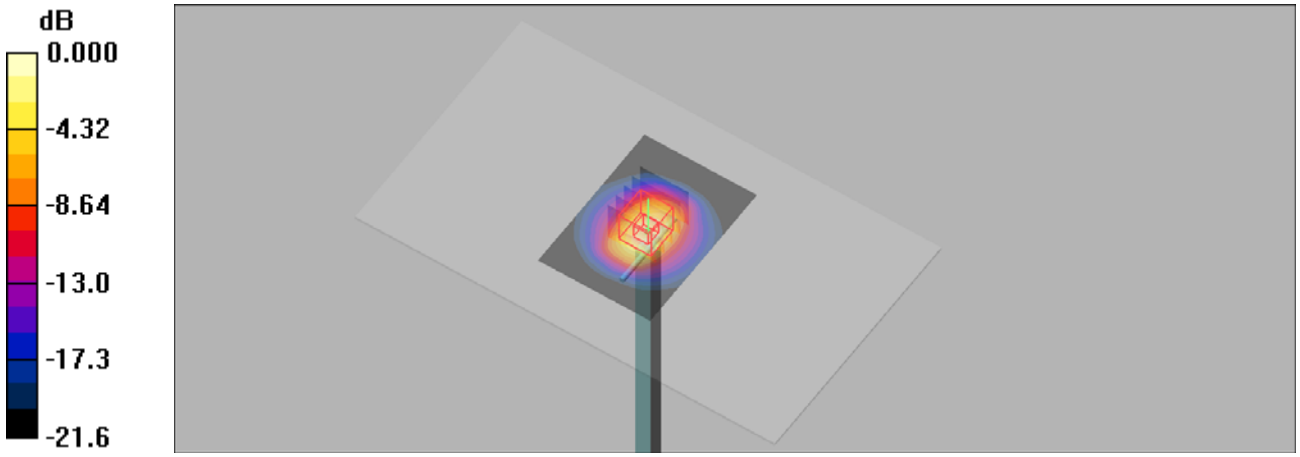

0 dB = 0.662mW/g

Test Laboratory: UnionTrust Date: 2019/8/26

System Check_B5250

DUT: Dipole D5GHzV2 SN:1280

Communication System: CW; Frequency: 5250 MHz;Duty Cycle: 1:1
Medium: B5G Medium parameters used: f = 5250 MHz; σ = 5.494 S/m; ε_r = 48.293; ρ = 1000 kg/m^3

DASY4 Configuration:
- Probe: EX3DV4 - SN7506; ConvF(5.03, 5.03, 5.03); Calibrated: 6/27/2019
- Sensor-Surface: 1.4mm (Mechanical Surface Detection)
- Electronics: DAE4 Sn1557; Calibrated: 6/18/2019
- Phantom: SAM 1; Type: QD 000 P40 CB; Serial: TP/1378
- ; Postprocessing SW: SEMCAD, V1.8 Build 18

Pin=100mW/Area Scan (91x91x1): Interpolated grid: dx=1.000 mm, dy=1.000 mm
Maximum value of SAR (interpolated) = 17.4 W/kg

Pin=100mW/Zoom Scan (8x8x7)/Cube 0: Measurement grid: dx=4mm, dy=4mm, dz=1.4mm
Reference Value = 66.86 V/m; Power Drift = -0.01 dB
Peak SAR (extrapolated) = 28.5 W/kg
SAR(1 g) = 7.61 W/kg; SAR(10 g) = 2.18 W/kg
Maximum value of SAR (measured) = 17.5 W/kg

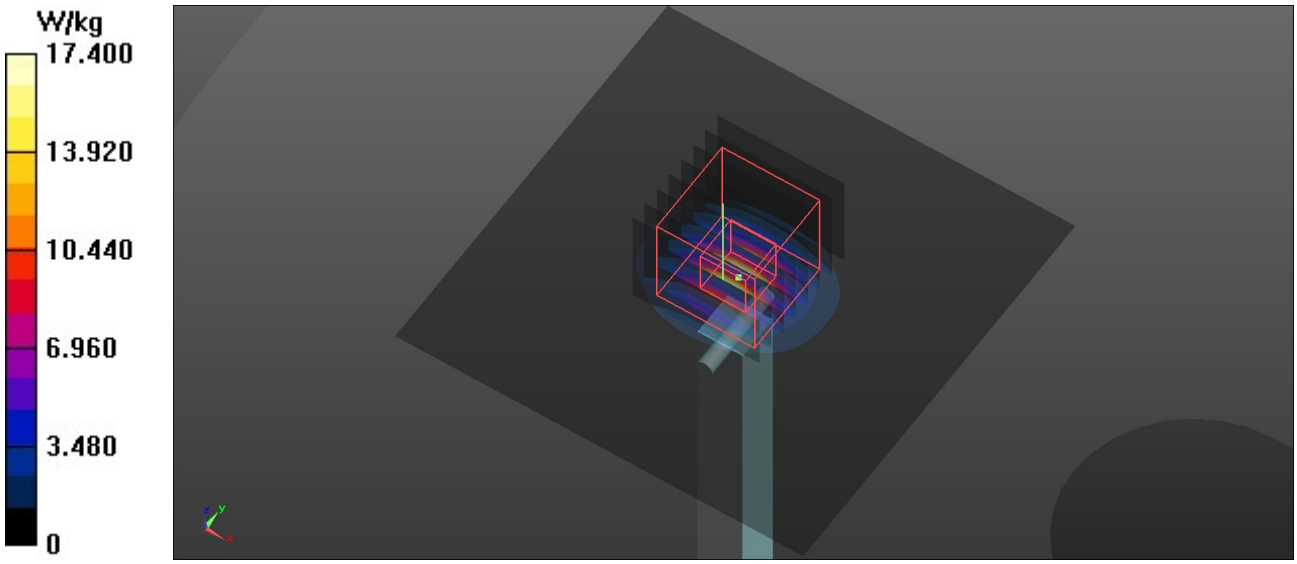

Test Laboratory: UnionTrust Date: 2019/8/27

System Check_B5800

DUT: Dipole D5GHzV2 SN:1280

Communication System: CW; Frequency: 5800 MHz;Duty Cycle: 1:1
Medium: B5G Medium parameters used: f = 5800 MHz; σ = 6.221 S/m; ε_r = 47.4; ρ = 1000 kg/m^3

DASY4 Configuration:
- Probe: EX3DV4 - SN7506; ConvF(4.41, 4.41, 4.41); Calibrated: 6/27/2019
- Sensor-Surface: 1.4mm (Mechanical Surface Detection)
- Electronics: DAE4 Sn1557; Calibrated: 6/18/2019
- Phantom: SAM 1; Type: QD 000 P40 CB; Serial: TP/1378
- ; Postprocessing SW: SEMCAD, V1.8 Build 18

Pin=100mW/Area Scan (91x91x1): Interpolated grid: dx=1.000 mm, dy=1.000 mm
Maximum value of SAR (interpolated) = 17.6 W/kg
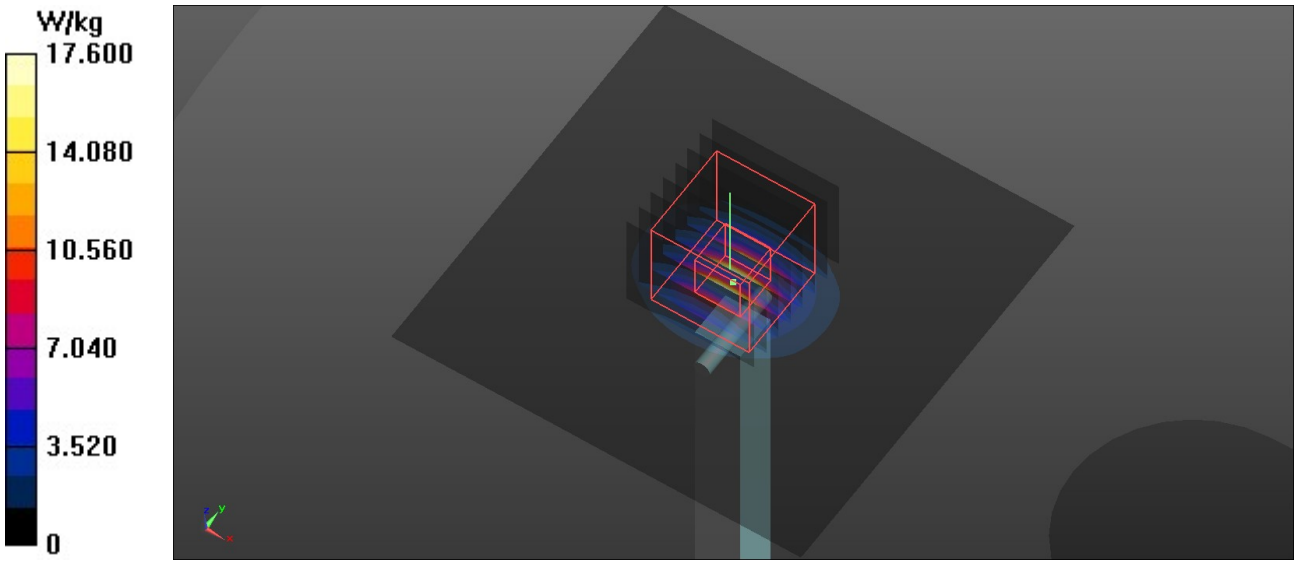
Pin=100mW/Zoom Scan (8x8x7)/Cube 0: Measurement grid: dx=4mm, dy=4mm, dz=1.4mm
Reference Value = 63.45 V/m; Power Drift = -0.03 dB
Peak SAR (extrapolated) = 31.5 W/kg
SAR(1 g) = 7.28 W/kg; SAR(10 g) = 2.06 W/kg
Maximum value of SAR (measured) = 17.7 W/kg