Onethinx OTX-18.US
PSoC® 6x LoRaWAN module

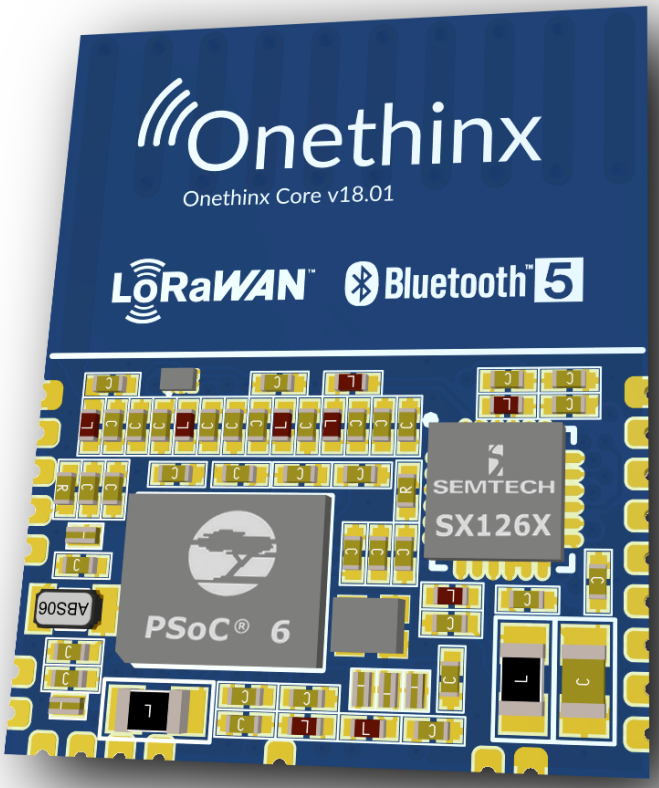

psacertified™
level one

1 Contents

1 Contents 2
2 General description 3
3 Feature list 4
4 Pinout 5
5 Specifications 7
5.1.1 Absolute maximum ratings 7
5.1.2 Recommended operating range 7
5.1.3 DC specifications 7
5.1.4 LoRa specifications 8
5.1.5 Bluetooth specifications 8
5.1.6 Low Power specifications 9
5.1.7 Physical specifications 9
6 Internal Routing 10
7 Design guidelines 11
7.1 Placement of the module 11
7.2 Bluetooth antenna 11
8 Reference design 12
9 Environmental Specifications 14
9.1 Environmental Compliance 14
9.2 RF Certification 14
9.3 Environmental Conditions 14
9.4 ESD and EMI Protection 14
10 Regulatory Information 15
10.1 FCC 15
10.2 European Declaration of Conformity 17
10.3 OEM Integrator Instructions 18
11 Revision history 19
12 List of figures and tables 19

2 General description

The Onethinx LoRaWAN™ Core module (OTX-18) is a ready-to-use LoRaWAN™ module, featuring Cypress's newest PSoC 6x and Semtech's next generation of sub-GHz radio transceiver SX1262.

The chipset and components used on the Onethinx LoRaWAN™ Core module are the best in class, delivering significant advantages to the developer and user. In today's world security is inevitable though complex as well. The OTX-18 module unburdens the developer from being a security expert and enables you to build any LoRaWAN™ application you can think of with an ultra-short time-to-market.

The OTX-18 is designed for extended battery life with just 4.2 mA of active receive current consumption. The module can transmit up to +21 dBm with a highly efficient integrated power amplifier and antenna.

The module is developed in close cooperation with Cypress and Escrypt, tailored to suit IoT projects that requires ultra-secure end-to-end encryption combined with robust LoRaWAN™ functionality. The Onethinx Core module contains our own PSoC® 6x optimized LoRaWAN™ stack for industries best performance. Due to the integrated 915MHz antenna and the ready implemented isolated and certified LoRaWAN™ stack the module is ready to use 'out of the box'. The Cypress PSoC 6x configurable analog and digital blocks ensure an easy and direct connection to virtually any sensor without the need of additional components.

This makes the Onethinx Core module extremely well suited for projects that require high security demands and optimal performance like public security, agriculture, leak detection, disaster precaution, gas- and water metering, street lighting applications and many more.

3 Feature list

- ✓The only LoRaWAN™ module with latest Cypress PSoC® 6x MCU
- ✓Based on the latest Semtech® SX126x chipset for extended battery use
- ✓Bluetooth® low energy (BLE) 5.0
- ✓Embedded secure element functionality with secure boot
- ✓PSA certified (OTX-18P)
- ✓Locked down LoRaWAN™ stack runs isolated from user code for ultimate security
- ✓Highly efficient integrated antenna
- ✓Adding wireless configuration possibilities, over the air firmware upgrades
- ✓Recommended by Cypress®, ESCRYPT® and The Things Network®
- ✓Easy to connect to virtually any sensor
- ✓Ultra low hibernate current: 600 nA in hibernate mode with RTC (@ 1.8V)

4 Pinout

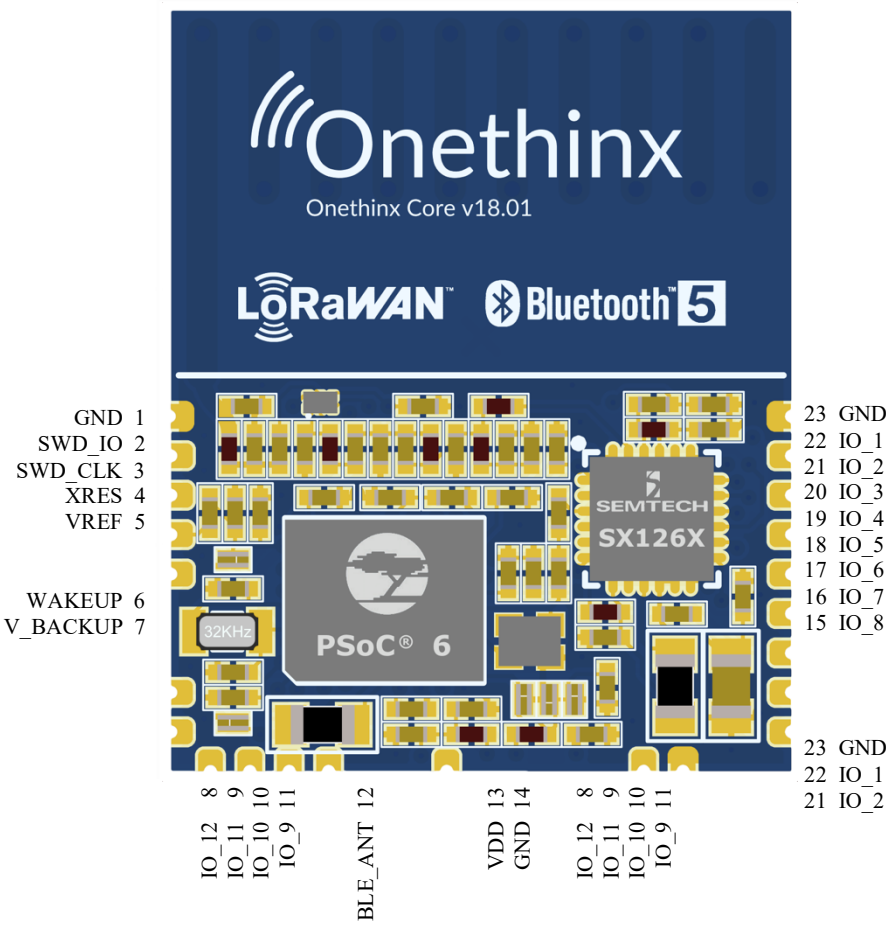

Figure 1: OTX-18 pinout

The following table give a detailed description of the pins.

OTX-18 pin	PSOC6x pin	Signal	Description
1		GND	Ground
2	P6_6	SWD_IO	Serial Wire Debug Data / GPIO
3	P6_7	SWD_CLK	Serial Wire Debug Clock / GPIO
4		XRES	Reset Input (active low)
5		VREF	Analog Vref Out
6	P0_4	Wakeup	Wakeup input (selectable active high/low)
7		V_BACKUP	Backup power
8	P10_1	IO_12	General Purpose IO
9	P11_5	IO_11	General Purpose IO
10	P10_0	IO_10	General Purpose IO
11	P11_7	IO_9	General Purpose IO
12		BLE_ANT	Bluetooth Radio RF output (50 ohms)
13		V_IN	Power +3.3V
14		GND	Ground
15	P12_5	IO_8	General Purpose IO
16	P12_4	IO_7	General Purpose IO
17	P9_2	IO_6	General Purpose IO
18	P10_3	IO_5	General Purpose IO
19	P9_3	IO_4	General Purpose IO
20	P10_2	IO_3	General Purpose IO
21	P9_1	IO_2	General Purpose IO
22	P9_0	IO_1	General Purpose IO
23		GND	Ground

Table 1: OTX-18 Pin description

5 Specifications

5.1.1 Absolute maximum ratings

Parameter	Description	Min	Typ	Max	Units
VDD.max	Maximum supply voltage	-0.5		3.7	V
T.ambMax	Storage temperature limits	-55		125	°C
I.totalMax	Supply current limits	-10		250	mA
V.GPIOMax	GPIO voltage limits	-0.5		VDD+0.5	V
I.GPIOMax	GPIO current limits	-25		25	mA

Table 2: Absolute maximum ratings

5.1.2 Recommended operating range

Parameter	Description	Min	Typ	Max	Units
VDD	supply voltage	1.8	3.3	3.6	V
T.amb	temperature limits	-40		85	°C

Table 3: Recommended operating conditions

5.1.3 DC specifications

Parameter	Description	Min	Typ	Max	Units
VI.L	GPIO input voltage low threshold	0.3*VDD			V
VI.H	GPIO input voltage high threshold			0.7*VDD	V
VO.L	GPIO output voltage low threshold			0.4	V
VO.H	GPIO output voltage high threshold	VDD-0.5		VDD+0.5	V

Table 4: DC specifications

5.1.4 LoRa specifications

Parameter	Description	Min	Typ	Max	Units
RX.RNG	Frequency range, receiver	902		928	MHz
RX.BWR	Bandwidth range, receiver	4		500	KHz
RX.SIN	RF input sensitivity (SF = 12, BW = 125KHz)		-137		dBm
TX.RNG	Frequency range, transmitter	902		915	MHz
TX.BWR	Bandwidth range, transmitter	4		500	KHz
TX.POUT	RF output power (OTX-18x.EU)		+20		dBm
RF.FO	RF frequency offset (TX & RX)		+/- 8	+/- 25	ppm

Table 5: LoRa specifications

5.1.5 Bluetooth specifications

Parameter	Description	Min	Typ	Max	Units
RX.SIN	BT RF input sensitivity		-95		dBm
RX.PMAX	BT RF output power		+4		dBm

Table 6: Bluetooth specifications

5.1.6 Low Power specifications

Low power specifications are measured with the following conditions: Chip power mode = ULP, VDD = 3V3, SX1261 in sleep mode with cold start, RF switch turned off. Active cores are in infinite loops.

Parameter	Description	Min	Typ	Max	Units
I.Active	Both cores active		3.67		mA
I.DS	Deep sleep (3.3V)		7.60		µA
I.HIB1	Hibernate, RTC active (3.3V)		1.66		µA
I.HIB2	Hibernate, RTC disabled (3.3V)		1.21		µA
I.HIB2	Hibernate, RTC active (3.0V)		1.24		µA
I.HIB3	Hibernate, RTC disabled (3.0V)		0.66		µA
I.HIB2	Hibernate, RTC active (1.8V)		0.60		µA
I.HIB2	Hibernate, RTC disabled (1.8V)		0.41		µA

Table 7: Low power specifications

5.1.7 Physical specifications

Parameter	Description	Typ	Units
DIM	Length x Width x Height	24.5 x 20 x 2.4	mm
M	Weight	1.95	g

Table 8: Physical parameters

6 Internal Routing

The table below outlines the internal routing of components.

PSoC6	PSoC6 ball	Function	SX126x	Module IO	RF SWITCH
P6_6	L10	SWD debugger		SWDIO	
P6_7	K10			SWDCLK	
XRES	E2			XRES	
VBACKUP	C1	Backup power		V_BACKUP	
VREF	B10	Analog REF voltage		VREF	
XI	M4	32 Mhz 10 PPM			
XO	M5				
ANT	K1	BLE Antenna 50 ohm		BLE ANT	
P0_0	C2	32.768 Khz 10 PPM			
P0_1	D3				
P0_4	F3	Wake Up		WAKEUP	
P5_0	L6	SX126x SPI	MOSI		
P5_1	K6		MISO		
P5_2	J6		SCK		
P7_6	G8		NSS		
P8_1	F9	SX126x	NRESET		
P9_6	C8		BUSY		
P12_7	H5	SX126x DIO	DIO1		
			DIO2		RX/TX
P6_4	J9		DIO3		
P9_5	C9	RF switch power			POWER
P9_0	D10	Module GPIO		IO_1	
P9_1	D9			IO_2	
P10_2	F6			IO_3	
P9_3	D7			IO_4	
P10_3	E6			IO_5	
P9_2	D8			IO_6	
P12_4	C5			IO_7	
P12_5	D4			IO_8	
P11_7	A5			IO_9	
P10_0	B8			IO_10	
P11_5	A6			IO_11	
P10_1	A8			IO_12	

Table 9: Internal routing

7 Design guidelines

7.1 Placement of the module

The Onethinx module has an integrated LoRa antenna, which should be in free space for best results. The figure below shows the advised module positioning and corresponding pad locations.

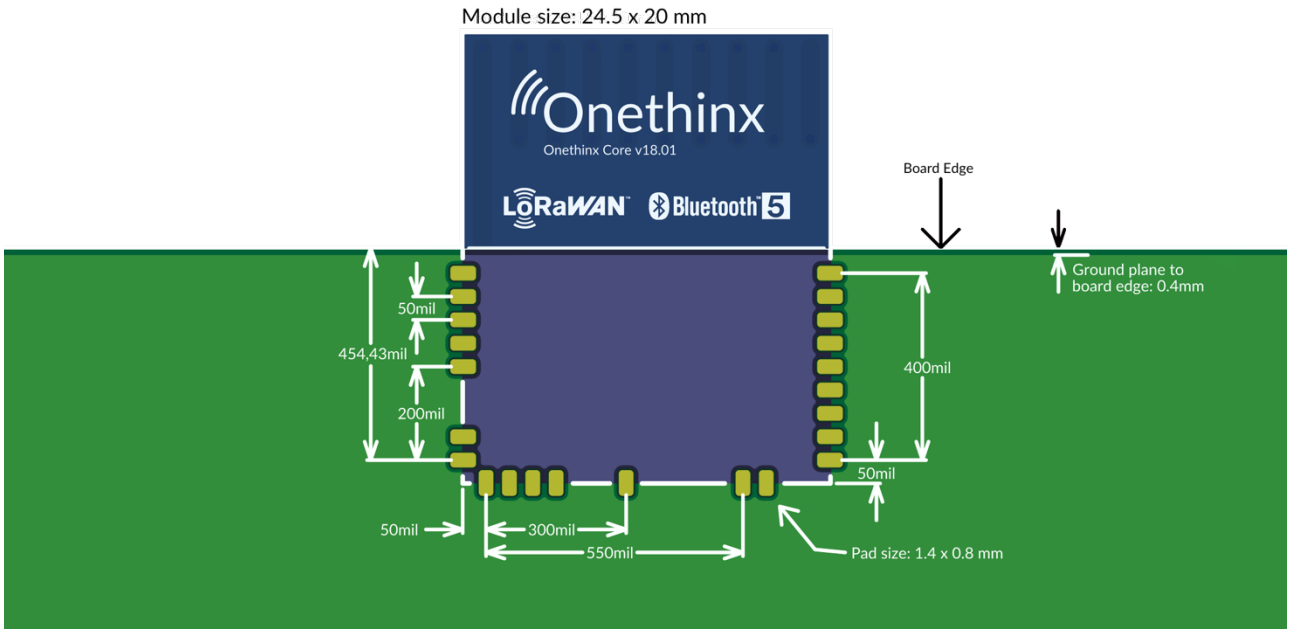

Figure 2: OTX-18 PCB design guidelines and pad placement

There are library components available for several commonly-used PCB design IDEs. Please check the Onethinx website, forum and Github before creating your own.

7.2 Bluetooth antenna

Please refer to the design reference files of the development kit on how to place the Bluetooth antenna. The antenna used in the reference design is the following:
Fractus FR05-S1-N-0-102

Description	LoRa Antenna	BLE Antenna	Units
Antenna Type	PCB trace	Chip	
Frequency range	900-930	2400-2500	MHz
Peak Gain	0dBi	1.7dBi	dBi
Return Loss	>10	>10	dB

8 Reference design

The design files of the Onethinx devkit are available on our website. The connection header size and positioning allow the devkit to act as a battery-powered Arduino with LoRaWAN, so you are able to add shields to it (you will need to configure the I/O of course).

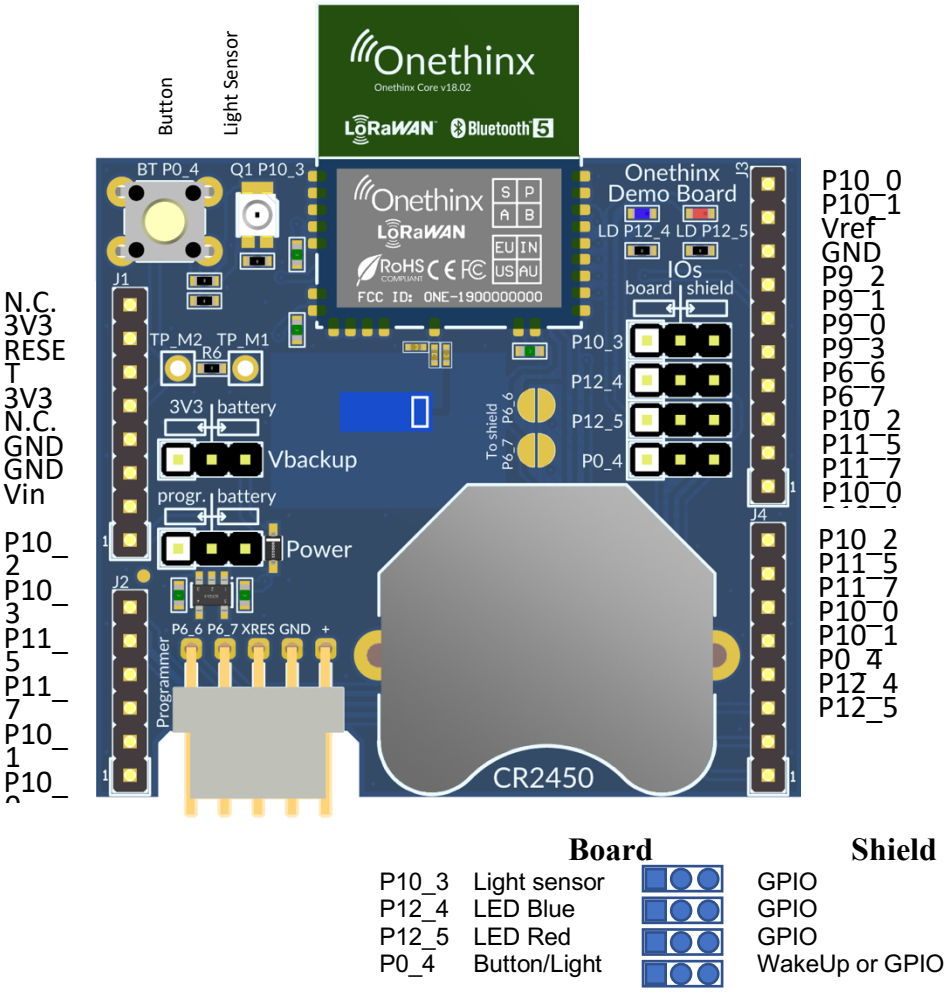

Figure 3: OTX-18 Dev. Kit

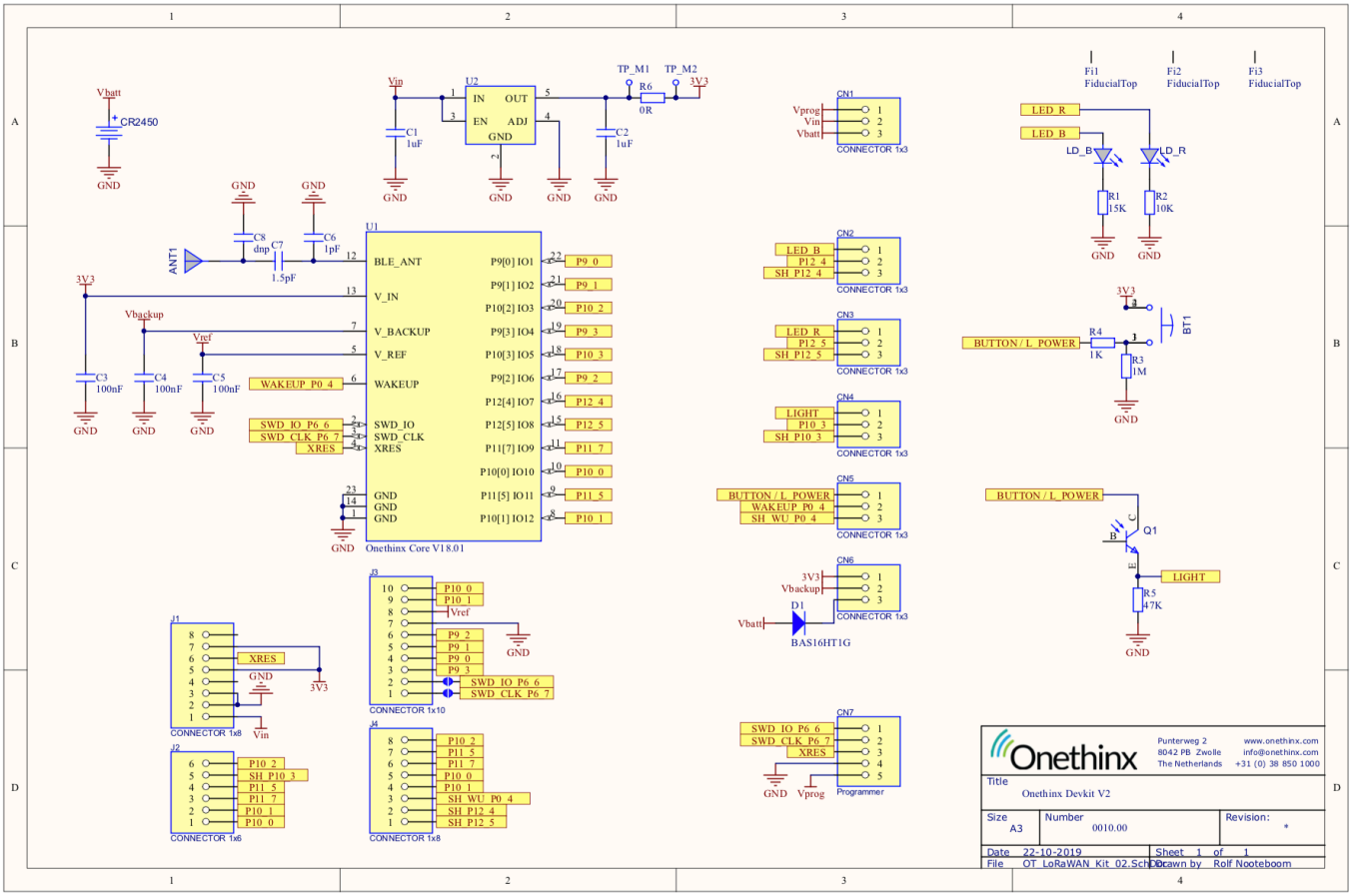

Figure 4: OTX-18 Dev. Kit V2 schematic

9 Environmental Specifications

9.1 Environmental Compliance

This OTX-18 module is produced in compliance with the Restriction of Hazardous Substances (RoHS) and Halogen-Free (HF) directives. The Onethinx module and components used to produce this module are RoHS and HF compliant.

9.2 RF Certification

The OTX-18 module will be certified under the following RF certification standards at production release.

- FCC: 2AUBKOTX-18
- CE
- IC: ?????-????

9.3 Environmental Conditions

Environmental Conditions Table 26 describes the operating and storage conditions for the Onethinx module.

Description	Minimum	Maximum	Units
Operating temperature	-35	85	°C
Operating humidity (relative, non-condensation)	5	85	%
Thermal ramp rate	-	3	°C/minute
Storage temperature	-55	155	°C
Storage humidity		85	%

Table 10: Environmental Conditions for the OTX-18 module

9.4 ESD and EMI Protection

Exposed components require special attention to ESD and electromagnetic interference (EMI).

A grounded conductive layer inside the device enclosure is suggested for EMI and ESD performance. Any openings in the enclosure near the module should be surrounded by a grounded conductive layer to provide ESD protection and a low-impedance path to ground.

Device Handling: Proper ESD protocol must be followed in manufacturing to ensure component reliability.

10 Regulatory Information

10.1 FCC

10.1.0 List of applicable FCC Rules:
The device OTX-18 complies with Part 15 of the FCC Rules (47 CFR Part 15 Subpart C §15.247). The device meets the requirements for modular transmitter approval as detailed in FCC public Notice DA00-1407.

10.1.1 Specific operational use conditions:
The modular transmitter should be used within the limits outlined in Chapter 5 (Specifications) and the according the Design Guidelines (Chapter 7).

Transmitter Operation is subject to the following two conditions:
(1) This device may not cause harmful interference, and
(2) This device must accept any interference received, including interference that may cause undesired operation.

This device has been tested and found to comply with the limits for a Class B digital device, pursuant to Part 15 of the FCC Rules. These limits are designed to provide reasonable protection against harmful interference in a residential installation. This device generates uses and can radiate radio frequency energy and, if not installed and used in accordance with the instructions, may cause harmful interference to radio communications. However, there is no guarantee that interference will not occur in a particular installation. If this equipment does cause harmful interference to radio or television reception, which can be determined by turning the equipment off and on, the user is encouraged to try to correct the interference by one or more of the following measures:
■ Reorient or relocate the receiving antenna.
■ Increase the separation between the equipment and receiver.
■ Connect the equipment into an outlet on a circuit different from that to which the receiver is connected.
■ Consult the dealer or an experienced radio/TV technician for help

CAUTION:
The FCC requires the user to be notified that any changes or modifications made to this device that are not expressly approved by Onethinx BV may void the user's authority to operate the equipment.

10.1.2 Limited module procedures:
N/A (the modular transmitter is approved as a ‘full modular module’).

10.1.3 Trace antenna designs:
N/A (the modular transmitter trace antenna is fixed on the PCB and therefore not applicable for design considerations by the OEM integrator).

10.1.4 RF exposure considerations:
To comply with FCC RF Exposure requirements, the Original Equipment Manufacturer (OEM) must ensure to install the approved antenna following the guidelines in Chapter 7.

The preceding statement must be included as a CAUTION statement in manuals, for products operating with the approved antenna in Chapter 7 on page 11, to alert users on FCC RF Exposure compliance. Any notification to the end user of installation or removal instructions about the integrated radio module is not allowed.

The radiated output power of OTX-18 with the trace antenna and the approved BLE antenna is below the FCC radio frequency exposure limits. Nevertheless, use OTX-18 in such a manner that minimizes the potential for human contact during normal operation.

End users may not be provided with the module installation instructions. OEM integrators and end users must be provided with transmitter operating conditions for satisfying RF exposure compliance.

10.1.5 Antennas:
Refer to Chapter 7 for the Design Guidelines and the antenna selection. If the OEM integrator wishes to choose an alternative antenna, it's peak gain should never exceed the gain of the listed antennas.

Refer to Chapter 10.4 for the OEM integrator instructions.

10.1.6 Label and compliance information:
The Original Equipment Manufacturer (OEM) must ensure that FCC labelling requirements are met. This includes a clearly visible label on the outside of the OEM enclosure specifying the appropriate Onethinx FCC identifier for this product as well as the FCC Notice above.

The FCC identifier is FCC ID: 2AUBKOTX-18. In any case the end product must be labeled exterior with "Contains FCC ID: 2AUBKOTX-18".

10.1.7 Information on test modes and additional testing requirements:
Refer to the OTX-18_operation_guide for more information for configuring the test modes of the modular transmitter.

Contact Onethinx BV for specific information on the additional testing requirements.

10.1.8 Additional testing, Part 15 Subpart B disclaimer:
All final host products must be tested to be compliant to FCC Part 15 Subpart B standards. While the Onethinx OTX-18 module was tested to be complaint to FCC unintentional radiator standards, FCC Part 15 Subpart B compliance testing is still required for the final host product. This testing is required for all end products. Onethinx OTX-18 compliance does not affirm the end product's compliance.

10.2 European Declaration of Conformity

Hereby, Onethinx BV declares that the module OTX-18 complies with the essential requirements and other relevant provisions of Directive 2014. As a result of the conformity assessment procedure described in Annex III of the Directive 2014, the end-customer equipment should be labeled as follows:

All versions of the OTX-18 in the specified reference design can be used in the following countries: Austria, Belgium, Cyprus, Czech Republic, Denmark, Estonia, Finland, France, Germany, Greece, Hungary, Ireland, Italy, Latvia, Lithuania, Luxembourg, Malta, Poland, Portugal, Slovakia, Slovenia, Spain, Sweden, The Netherlands, the United Kingdom, Switzerland, and Norway.

10.3 OEM Integrator Instructions

The OTX-18 module is tested with a standard SMA connector and with the antennas listed in Chapter 7 on page 11. When integrated in the OEMs product, these fixed antennas require installation preventing end-users from replacing them with non-approved antennas. Any antenna not in the following table must be tested to comply with FCC Section 15.203 for unique antenna connectors and Section 15.247 for emissions.

This device has been designed to operate with the antennas listed in Chapter 7 on page 11. Antennas having a gain greater than the listed antennas are strictly prohibited for use with this device. The required antenna impedance is 50 ohms.

The OEM must follow the regulatory guidelines and integration instructions listed above to inherit Onethinx's modular approval. The OTX-18 holds full modular approvals and is certified for integration to products only by OEM integrators under the following conditions:
(1) the antenna(s) must be installed such that a minimum separation distance of 20 cm is always maintained between the radiator (antenna) and all persons.
(2) the transmitter module must not be operating in conjunction with any other antenna or transmitter, except in accordance with FCC multi-transmitter product procedures.

If the two conditions above are met, further transmitter testing is not required. However, the OEM integrator is still responsible for testing their end-product for any additional compliance requirements required with this module installed (for example, digital device emissions, PC peripheral requirements, RF Exposure/SAR, etc.).

11 Revision history

Revision	Author	Date	Changes
A	RN	23-12-2017	Document creation
B	RN	07-08-2018	Corrected IO5 connection to 10_5. Updated Specifications.
C	JS	26-03-2019	Restructured document. Updated specifications.
D	RN	15-05-2019	Added Internal routing table. Corrected Dev. Kit LED naming.
E	RN	17-06-2019	Updated low power current consumption specifications.
F + G	RN	09-08-2019	Fixed typos and updated module placement picture.
H	RN	12-03-2020	Added Environmental and Regulatory information
I	RN	25-08-2020	Updated Regulatory information

Table 11: Revision history

12 List of figures and tables

Figure 1: OTX-18 pinout 5
Figure 2: OTX-18 PCB design guidelines and pad placement 11
Figure 3: OTX-18 Dev. Kit 12
Figure 4: OTX-18 Dev. Kit V2 schematic..... 13

Table 1: OTX-18 Pin description 6
Table 2: Absolute maximum ratings..... 7
Table 3: Recommended operating conditions 7
Table 4: DC specifications 7
Table 5: LoRa specifications..... 8
Table 6: Bluetooth specifications 8
Table 7: Low power specifications 9
Table 8: Physical parameters..... 9
Table 9: Internal routing 10
Table 10: Environmental Conditions for the OTX-18 module..... 14
Table 11: Revision history 19

Important Notice

Information relating to this product and the application or design described herein is believed to be reliable, however such information is provided as a guide only and Onethinx assumes no liability for any errors in this document, or for the application or design described herein. Onethinx reserves the right to make changes to the product or this document at any time without notice. Buyers should obtain the latest relevant information before placing orders and should verify that such information is current and complete. Onethinx warrants performance of its products to the specifications applicable at the time of sale, and all sales are made in accordance with the Onethinx' standard terms and conditions of sale.

ONETHINX PRODUCTS ARE NOT DESIGNED, INTENDED, AUTHORIZED OR WARRANTED TO BE SUITABLE FOR USE IN LIFE-SUPPORT APPLICATIONS, DEVICES OR SYSTEMS, OR IN NUCLEAR APPLICATIONS IN WHICH THE FAILURE COULD BE REASONABLY EXPECTED TO RESULT IN PERSONAL INJURY, LOSS OF LIFE OR SEVERE PROPERTY OR ENVIRONMENTAL DAMAGE. INCLUSION OF ONETHINX PRODUCTS IN SUCH APPLICATIONS IS UNDERSTOOD TO BE UNDERTAKEN SOLELY AT THE CUSTOMER'S OWN RISK. Should a customer purchase or use Onethinx products for any such unauthorized application, the customer shall indemnify and hold Onethinx and its officers, employees, subsidiaries, affiliates, and distributors harmless against all claims, costs damages and attorney fees which could arise.

The Onethinx name and logo are registered trademarks. All other trademarks and trade names mentioned may be marks and names of the respective companies. Onethinx reserves the right to make changes to, or discontinue any products described in this document without further notice. Onethinx makes no warranty, representation or guarantee, express or implied, regarding the suitability of its products for any particular purpose. All rights reserved.

More info:
onethinx.com

Onethinx.com Punterweg 2, 8042 PB Zwolle, The Netherlands
T + 31(0) 388 501 000 **E** info@onethinx.nl