SERVICE MANUAL

N4S Paka paka machine

FCC ID:2AUBO43014

Model:43014

Isuue date: Aug. 27, 2019

⚠ Caution

★ Please read the manual carefully and keep it in mind before using this machine .

★ Put this manual within touch of your reference in anytime .

PRECAUTIONS FOR USE

The following safety precautions are given throughout this manual. They must be strictly followed to protect those who install, use or maintain this product as well as to protect players, visitors and property.

⚠ When setting up the machine, be sure to consult industry experts. It is not possible to set up machines for people other than industry experts.

⚠ When installing this product, make sure that four feet are evenly placed on the floor, and ensure that the product is installed in a stable horizontal position. Instability of installation may result in machine injury or accident

⚠ When installing this product, do not overexert the movable parts. Otherwise, it will damage the product or cause injury or accident to people.

⚠ This product is only for indoor use.

⚠ You can't put the game console near the emergency exit.

⚠ Protect game consoles from the following effects:

1. Rain or damp places.
2. Where the sun shines.
3. Hazardous Flammable Material Places.

⚠ Do not place chemicals or beverage solutions above or near the game console.

⚠ Do not place objects near vents.

⚠ Do not stretch or twist the power cord.

⚠ Do not insert or pull out the power box by hand in wet condition.

⚠ Voltage requirements must be used within the specified range.

⚠ The power outlet must insert multiple power lines at one time.

⚠ Do not place the power cord where the passer-by passes.

⚠ Be sure to read the contents of the product instructions thoroughly.

⚠ Don't use too much force when moving a machine.

⚠ For proper ventilation, keep the game machine 300 mm away from the wall.

⚠ You can't change the system or plug-in head of the machine privately. Once some parts of the machine are changed, the machine will cause irreparable damage.

CONTENTS

1. DIMENSION • P04
2. SPECIFICATION • P04
3. NAME OF PARTS • P04
4. LABEL LOCATION • P07
4-1CAUTION LABEL LOCATION • P07
4-2FUCTION LABEL LOCATION • P09
5. COMPOMENTS • P10
6. INSTALLATION • P11
6-1INSTALLATION SPACE • P11
6-2HOW TO INSTALL • P11
6-3HOW TO FILL IN TOYS INTO TOP • P12
7. HOW TO REPLACE MAJOR COMPONENTS • • • • • • • • • • • • • • • • • • • P14
7-1REPLACING TOP • P14
7-2REPLACING DIAL • P16
7-3REPLACING MAIN STRUCTURE • P18
7-4HOW TO DISASSEMBLE TOP AND LIFT • • • • • • • • • • • • • • • • • • • P21
8. HOW TO PLAY • P22
8-1LOOP VIDEO • P23
8-2 MAIN INFO • P23
8-3PURCHASING INTERFACE • P24
8-4 Info INTERFACE • P25
8-5POINT FOR PURCHASE • P26
8-6TOYS DETAILS • P26
8-7SET UP • P27
8-8 WIFI SETTING • P28
8-9SERVER ADDRESS SETTING • P28
8-10 HARDWARE TEST • P29
8-11HARDWARE TESTING STEPS AND FAULT HANDING • • • • • • • • • • • • • • P29
8-12PURCHASE RECORD • P31
9. HOW TO UPDATED THE SOFTWARE • P41
10. HOW TO UPDATED THE VIDEO • P42
11. REPLACING MAINBOARD • P43
12. CIRCUIT DIAGRAM • P45

1. DIMENSION

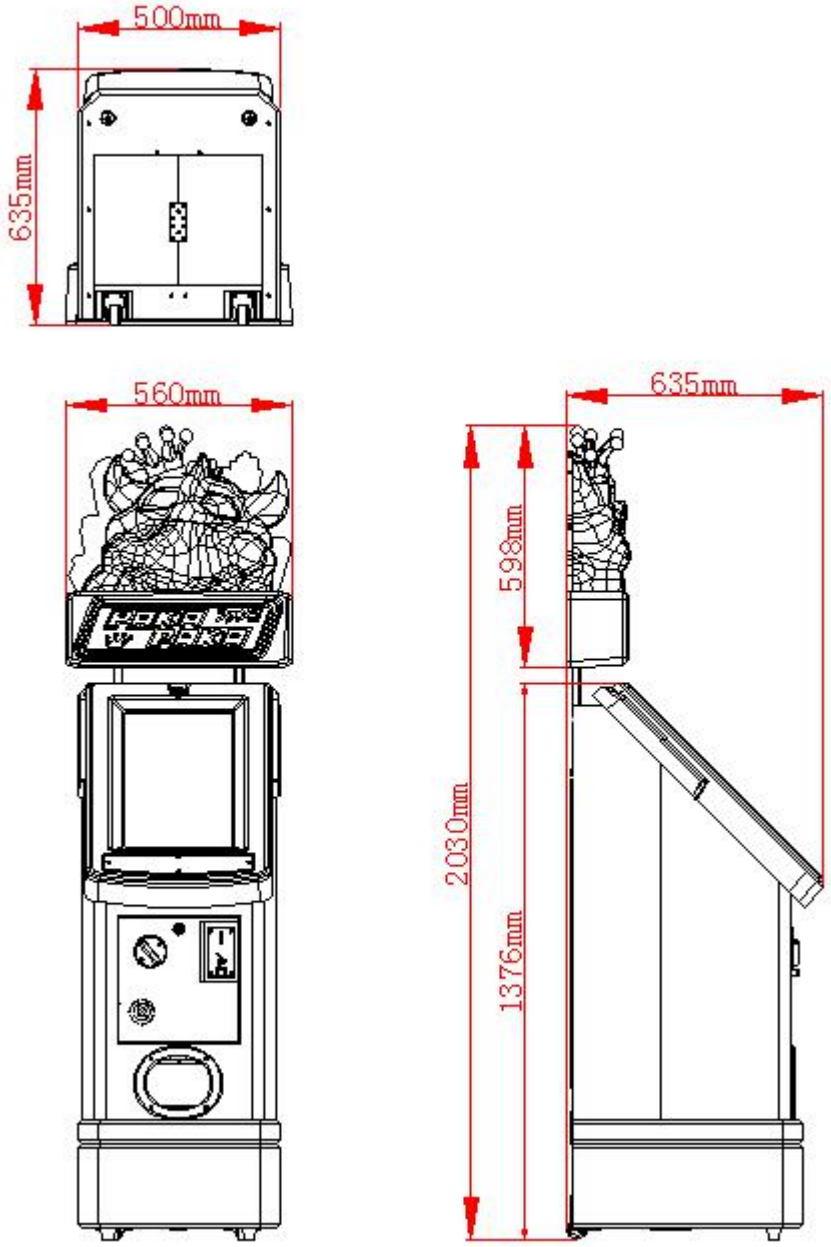

2. SPECIFICATION

DIMENSION（W*D*H）	500*635*2030(mm)
PACKING DIMENSION（W*D*H）	680*600*1570（mm）
GW(KG)	76.4KG
NW(KG)	68.4KG
VOLTAGE	120V
FREQUENCY RANGE	60Hz
CONSUMPTION	50W

3. NAME OF PARTS

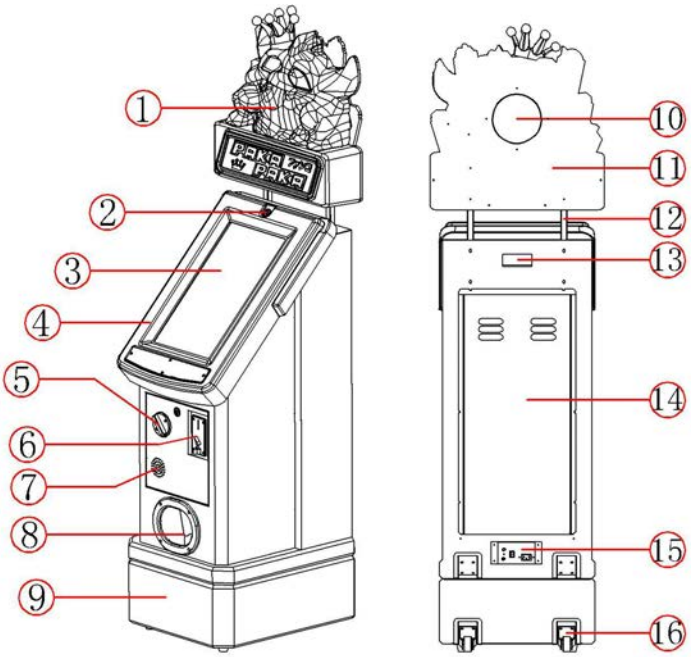

NO.	PART NAME	PICTURE	NO.	PART NAME	PICTURE
1	billboard		9	lift	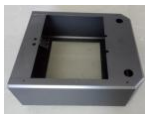
2	lock		10	Toys door	
3	screen		11	Top rear board	
4	Screen cover		12	Top holder	
5	dial		13	handle	
6	Coin selector		14	Rear door	
7	volumn		15	AC input part	

8	Capsule toy door		16	wheel	

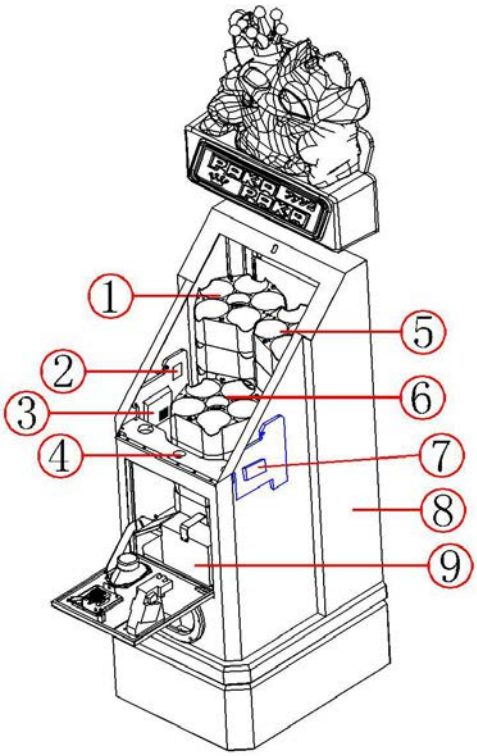

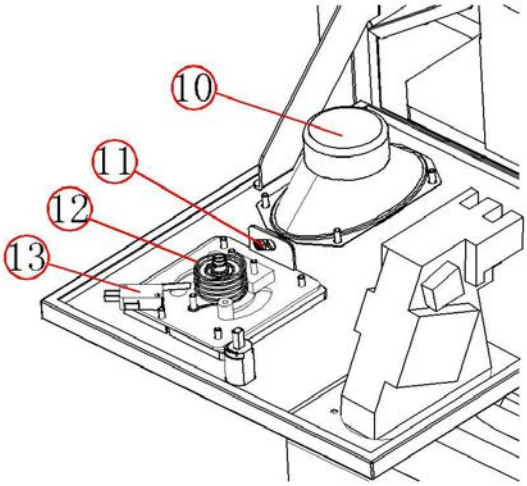

NO.	PART NAME	PICTURE	NO.	PART NAME	PICTURE
1	TYPE A		8	Main cabinet	
2	Motor drive board		9	Token box	
3	Mainboard		10	loudspeaker	
4	Repair button		11	Setup part	
5	TYPE B		12	Dial spring	

6	TYPE C		13	Dial switch	
7	Power box				

4. LABEL LOCATION

4-1CAUTION LABEL LOCATION

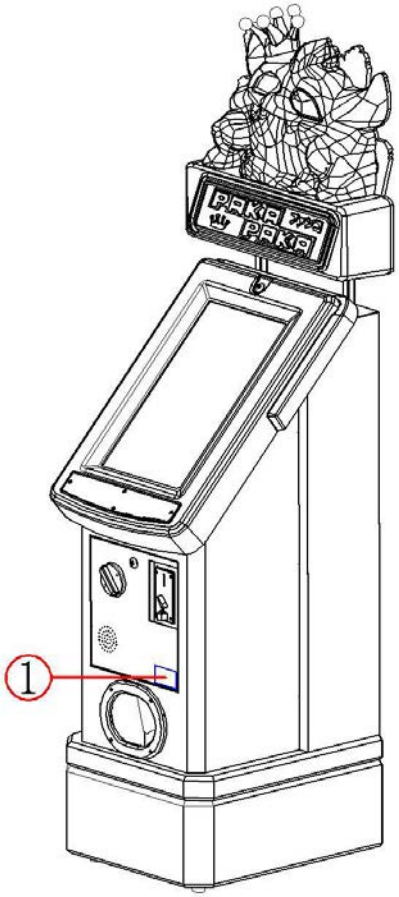

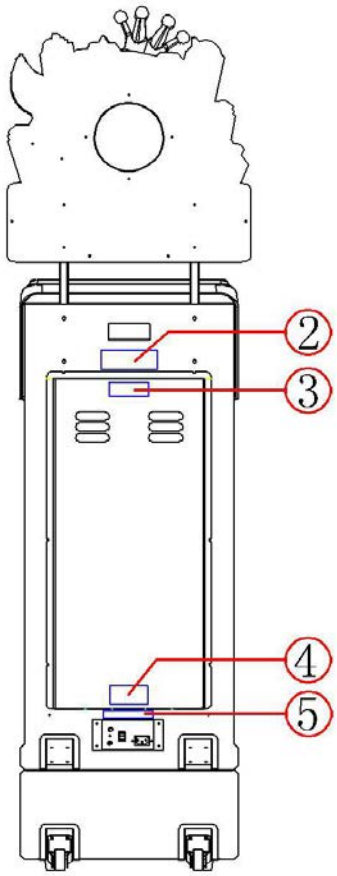

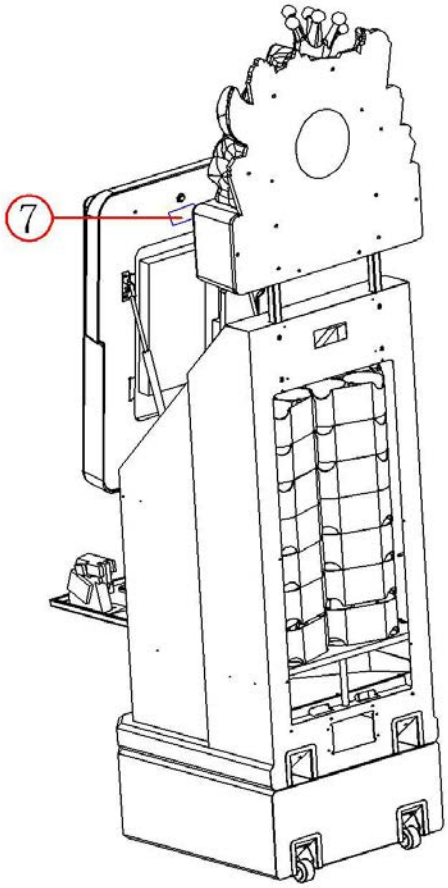

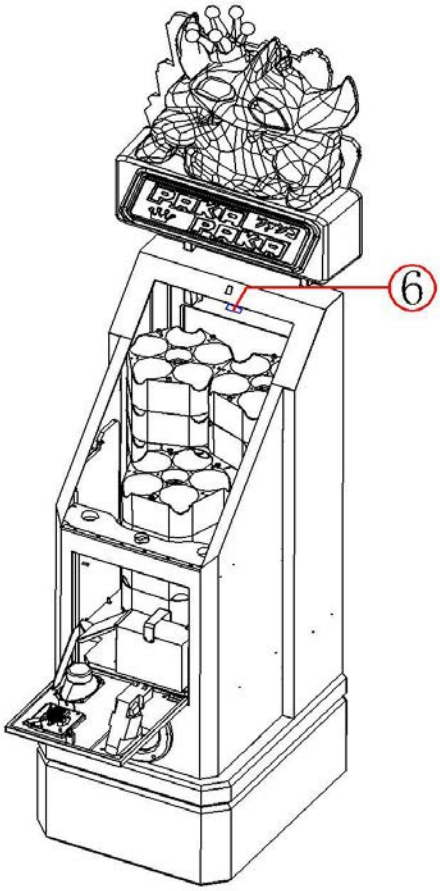

NO.	PART NAME	PICTURE	LABEL SIZE
1	nameplate		L90mm*W63mm
2	FCC	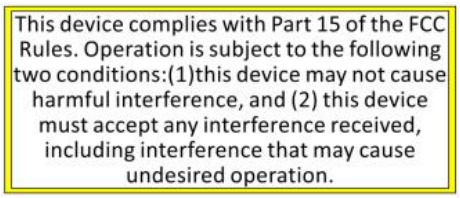	L121mm*W50mm
3	Do not open this door for non-professionals		L100mm*W65mm
4	Indoor use only	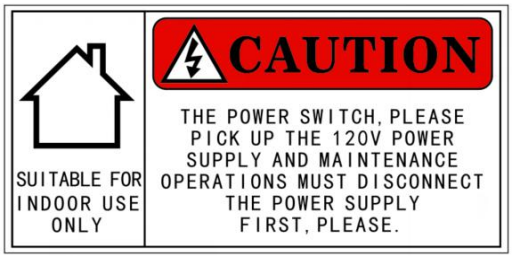	L133mm*W65mm
5	Unplug before maintain		L80mm*W18mm
6	careful the clip hand		L120mm*W50mm

7	Maintenance outages	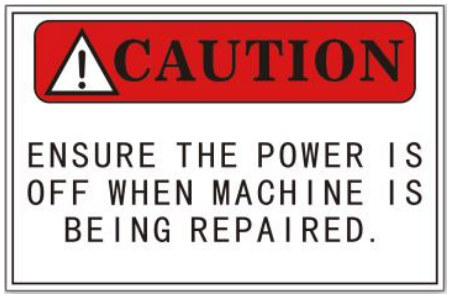	L100mm*W65mm

4-2 FUNCTION LABEL LOCATION

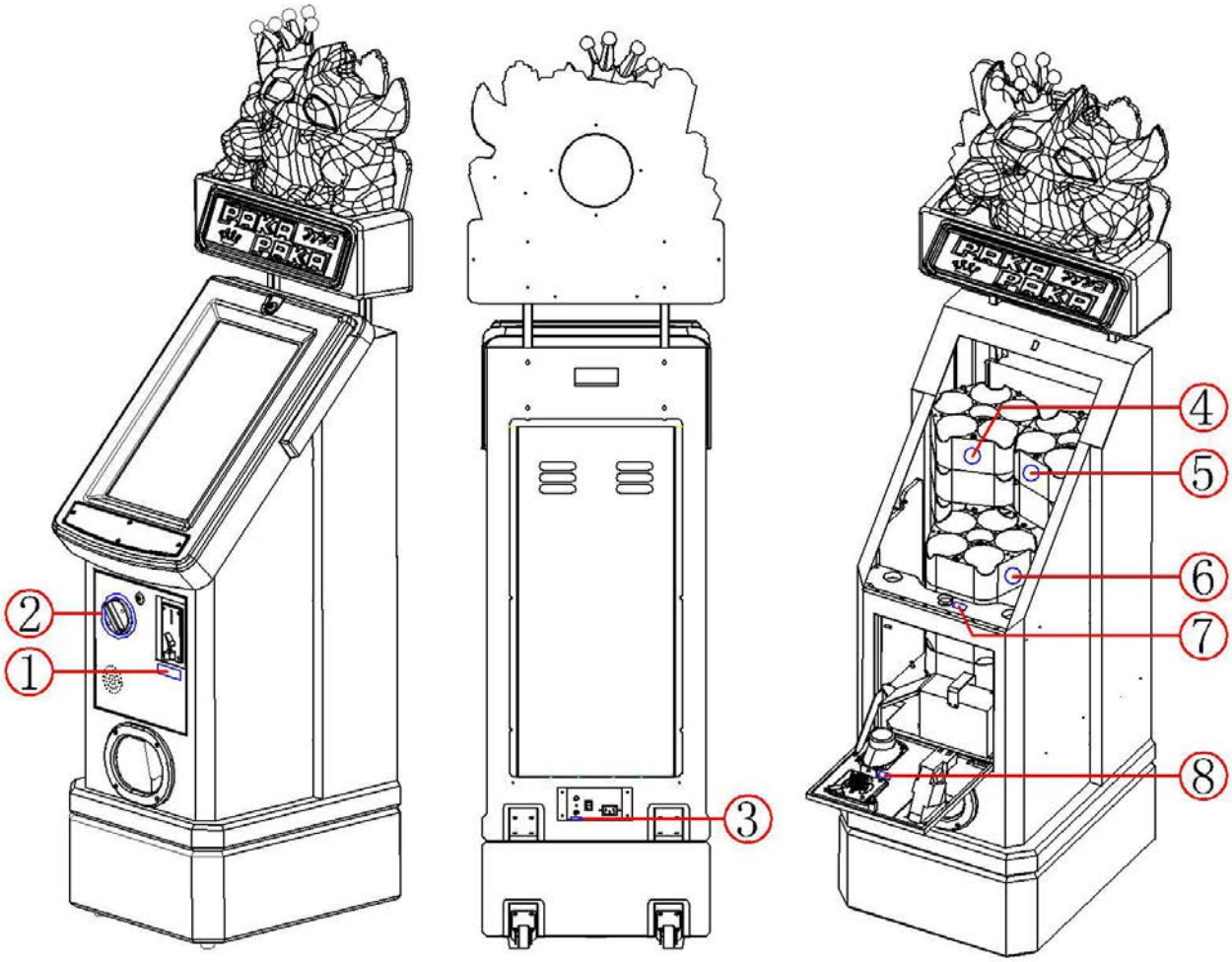

NO.	PART NAME	PICTURE	标签尺寸
1	Insert token		L60mm*W37mm

2	Turn dial	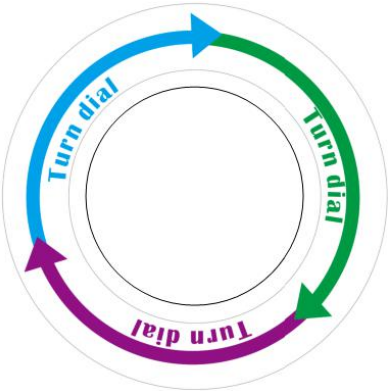	Ø127mm
3	Ground terminal		L47mm*W37mm
4	Type A		Ø50mm
5	Type B		Ø50mm
6	Type C		Ø50mm
7	Repair button		Ø35mm
8	Set up		L51mm*W27mm

5. COMPOMENTS

NO.	PART NAME	SPEC.	QTY	UNIT	PICTURE	REMARK
1	POWER LINE	1.5M	1	strip		
2	PROTECTIVE TUBE	ø6-20mm	1	pcs		110V/220 6A
3	MANUAL	A4	1	pcs		

4	MACHINE KEYS	LG01	2	pcs		
5	LOCK KEYS	LG02	2	pcs		
6	HEXAGON WRENCH	4mm	1	pcs		
7	HEXAGON WRENCH	5mm	1	个 pcs		

6. INSTALLATION

6-1 INSTALLATION SPACE

⚠ Need to have installation place. Maintenance Zone& Play zone should at least 1500mm*1600mm each.

⚠ Once you set up the machine with required game-play area, when installing this product, set the 4 leg levelers evenly on the floor and make sure that the product is installed stably in a horizontal position.

⚠ Installation of this product to ensure that the surrounding environment must be dry, ventilated, not damp

⚠ The installation process and precautions must be carefully read when installing this product.

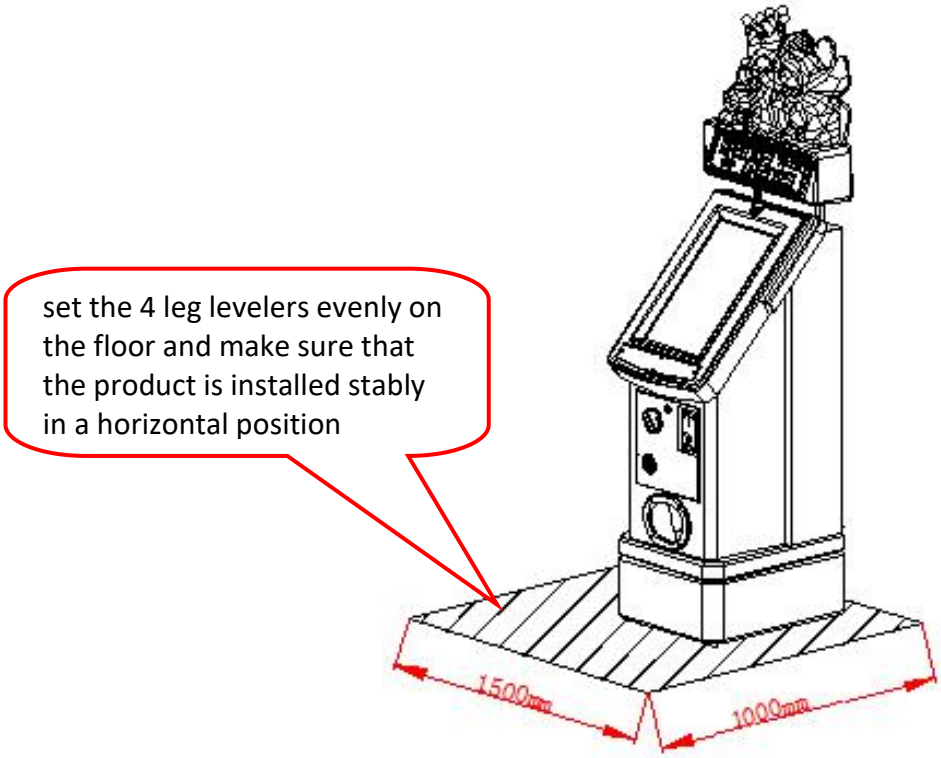

6-2. HOW TO INSTALL

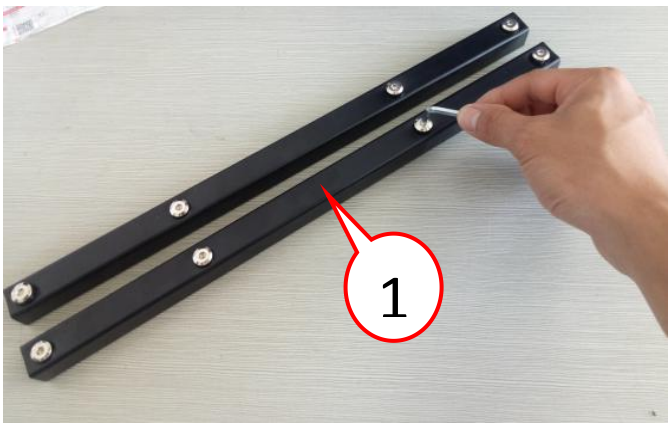

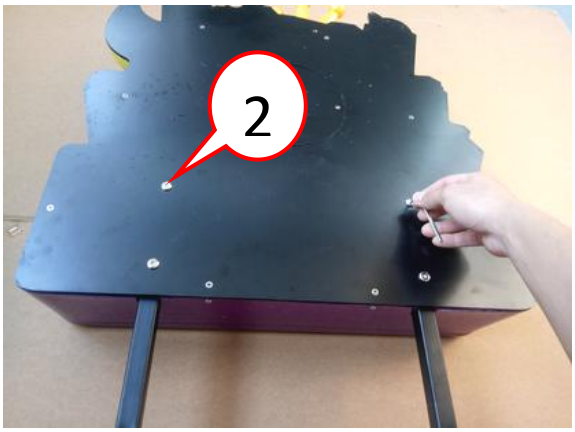

① LOOSEN TOP HOLDER TUBE SCREW(TOTAL 8PCS)

② CHOOSE THE 4PCS SCREW ,USE THE HEXAGON WRENCH CONNECT THE TUBE WITH BLACK BOARD.

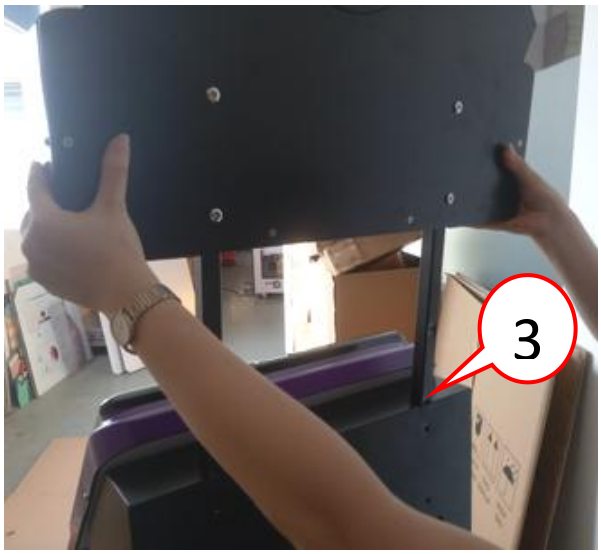

③ HOLD THE TOP BOX WITH TUBE INSERTED BETWEEN THE HOLES.

④ CHOOSE THE 4PCS SCREW ,USE THE HEXAGON WRENCH CONNECT THE TUBE WITH THE MAIN CABINET.

6-3 HOW TO FILL IN TOYS INTO TOP?

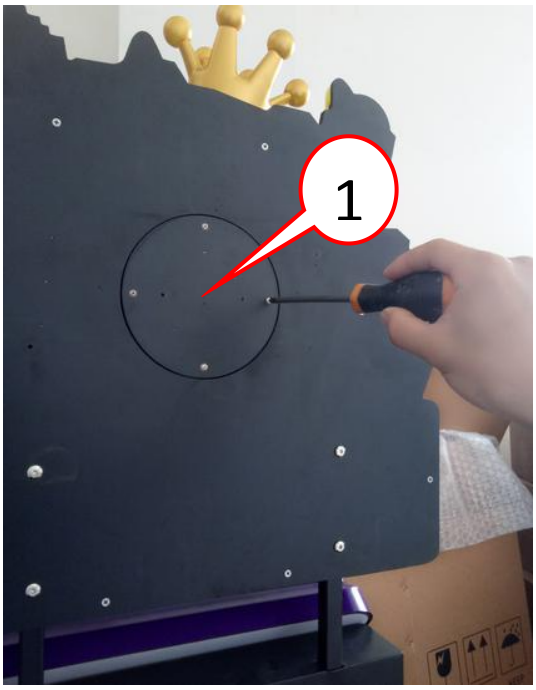

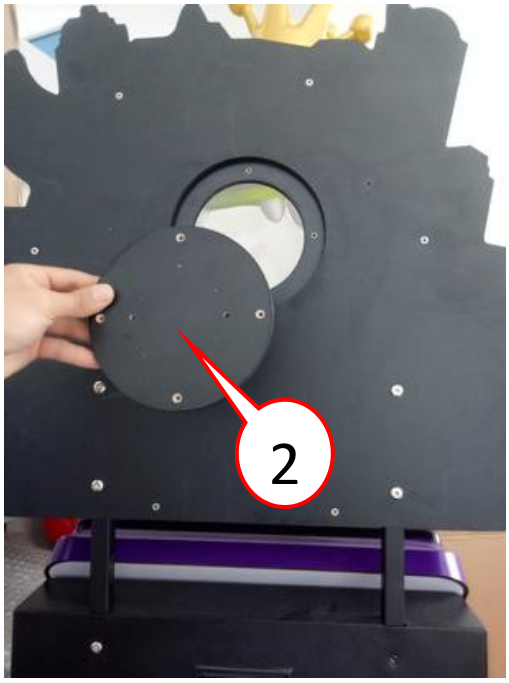

① USE THE SCREWDRIVER LOOSEN THIS 4 PCS SCREW.

② REMOVE THE CIRCULAR PLATE

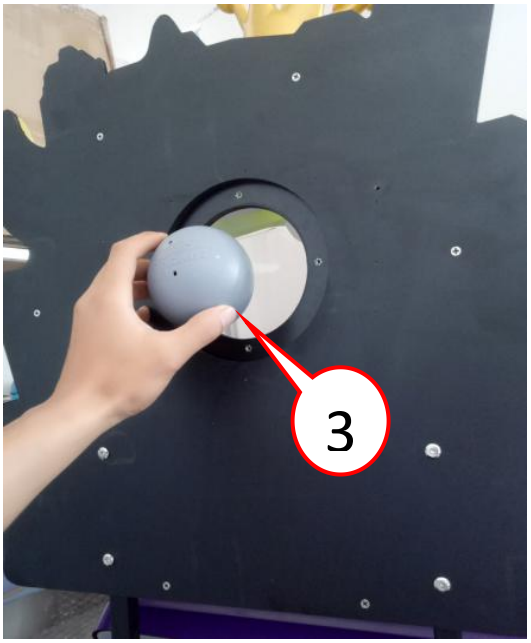

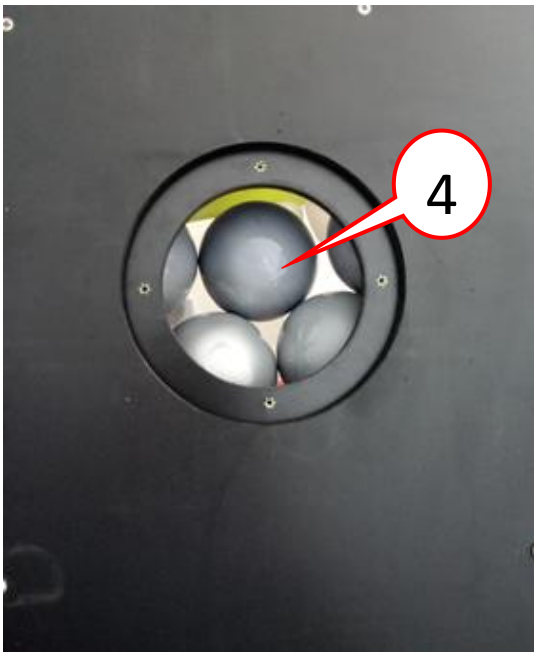

③ PUT CAPSULE TOYS INSIDE THE HOLE.

④ SHOW AS FULL TOYS INSIDE .

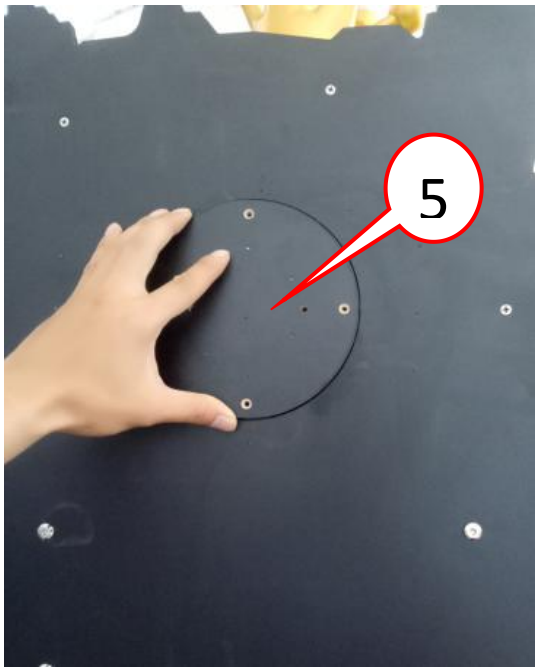

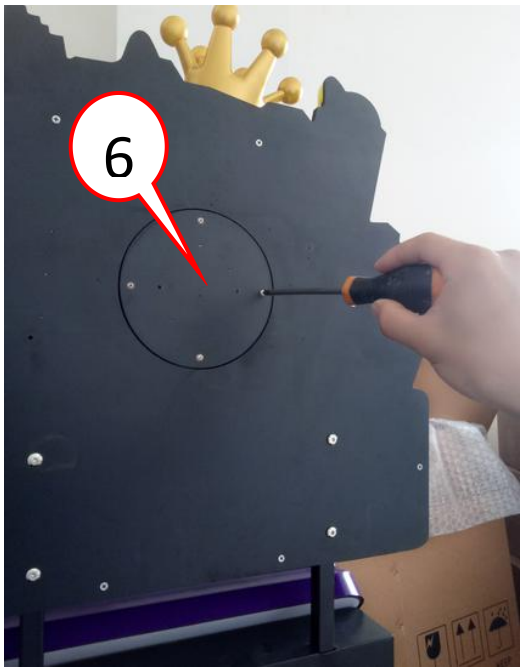

⑤ COVER CIRCULAR PLATE

⑥ USE THE SCREWDRIVER LOCK THIS 4 PCS SCREW

7. HOW TO REPLACE MAJOR COMPONENTS

7-1TOP PART INSTALLATION DISGRAM

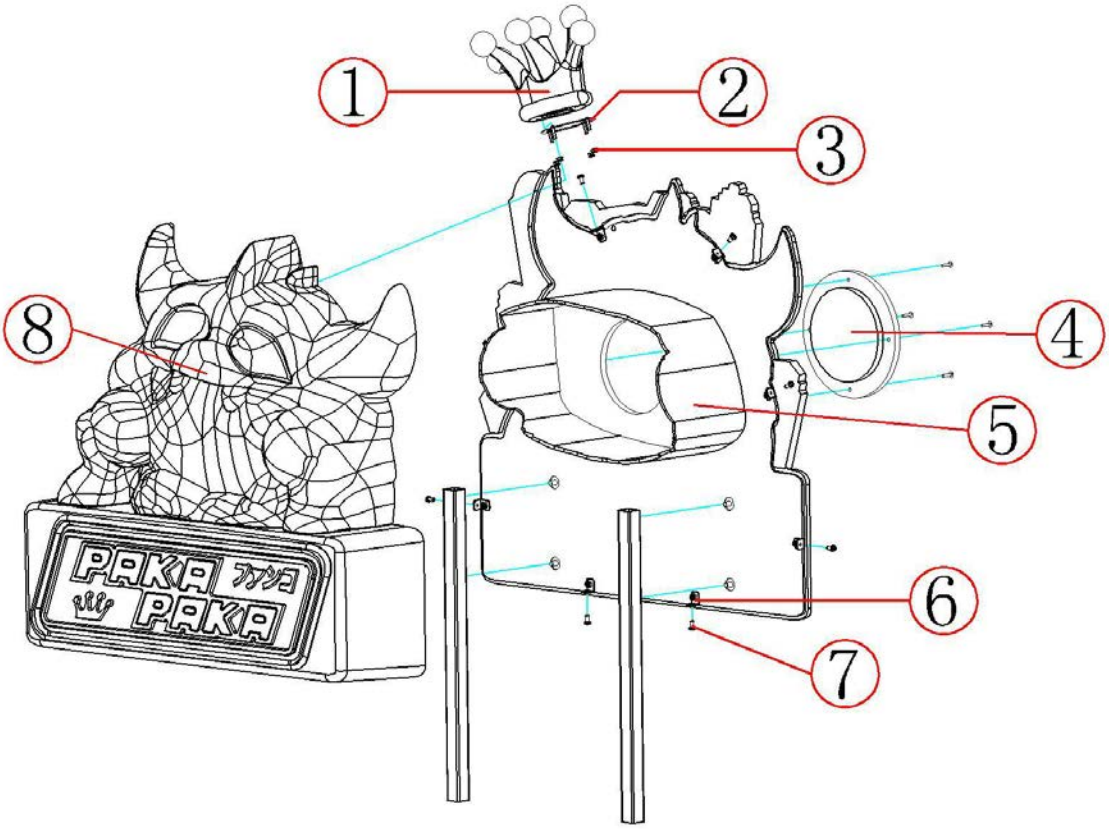

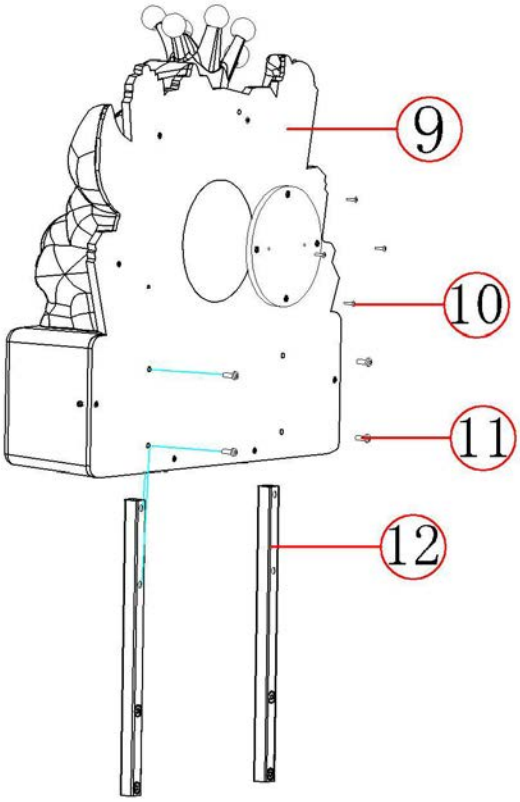

NO.	PART NAME	PICTURE	SPEC	QTY	REMARK
1	crown		pvc	1	
2	Crown Baseplate			1	SN.03-17
3	lock nut		M3	4	
4	Cover plate		Black MDF 9mm thick	1	
5	pvc foam board		white	1	
6	Corner code of plastic-absorbing cover		201 Stainless steel	1	
7	Hexagonal screw in round cup		M4*8mm	8	SN.03-06
8	Box shape		Plastic-absorbing transparent organic cover	8	
9	Back panel of box		Black MDF 9mm thick	1	
10	Large flat head machine silk		M3*14mm	4	
11	Hexagonal machine wire in disk head		M6*14mm	4	
12	Iron square tube		20*20*1.2mm	2	SN.07-04

7-2 DIAL PART INSTALLATION DISGRAM

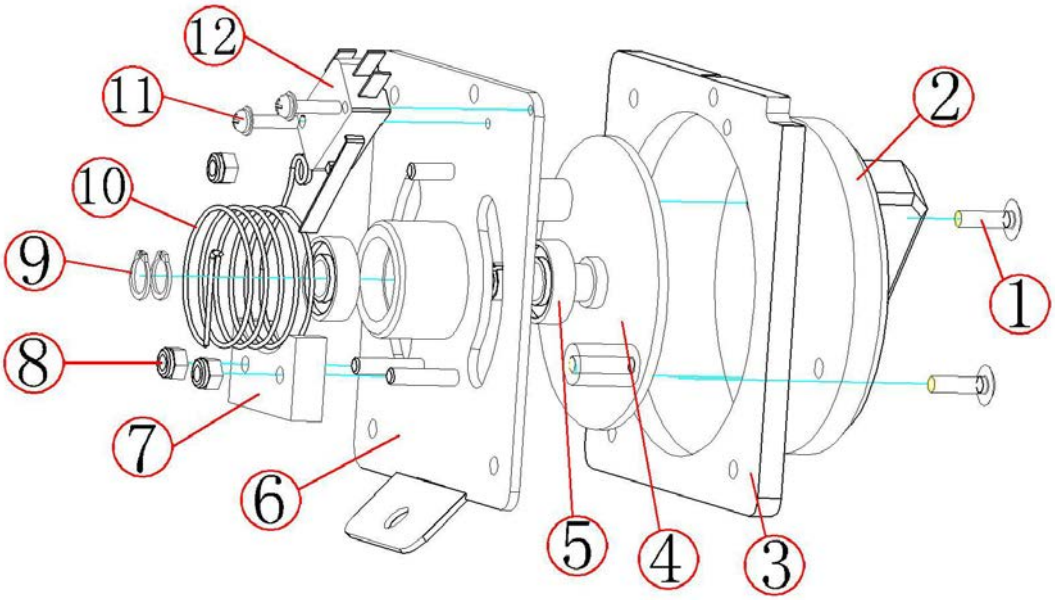

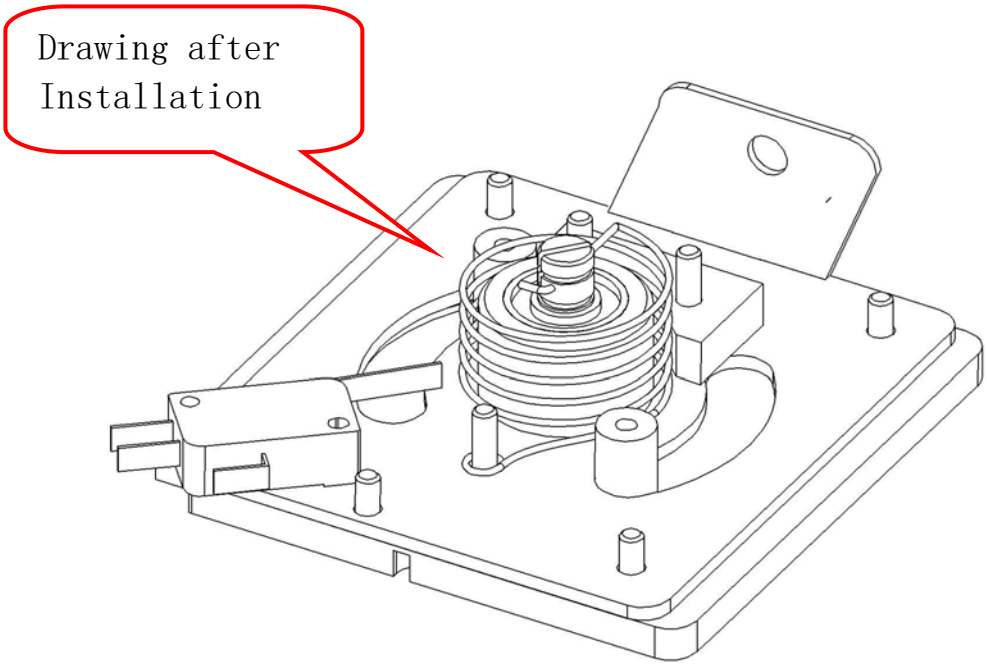

NO.	PART NAME	PICTURE	SPEC	QTY	REMARK
1	Hexagonal wire in round cup		M4*16	1	
2	dial	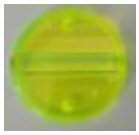	Fluorescent Green Acrylic	1	SN.06-05
3	Dial bottom plate		6mm Milk-white nylon board	1	SN.06-06
4	Dial Rotating plate		Q235 Galvanized	1	SN.02-05
5	Deep groove bearing		699ZZ	2	
6	Dial bottom plate		Q235 Galvanized	1	SN.02-06
7	Dial cushion gum		Yellow polyurethane	1	SN.06-07
8	lock nut		M4	3	
9	circlip		Ø8mm	2	
10	Dial spring		diameter 1.2 Stainless steel wire	1	SN.07-03
11	Large flat head machine silk		M4*16mm	2	
12	Micro switch		Long shape	1	

7-3 CAPSULE TOYS STRUCTURE PART INSTALLATION DISGRAM

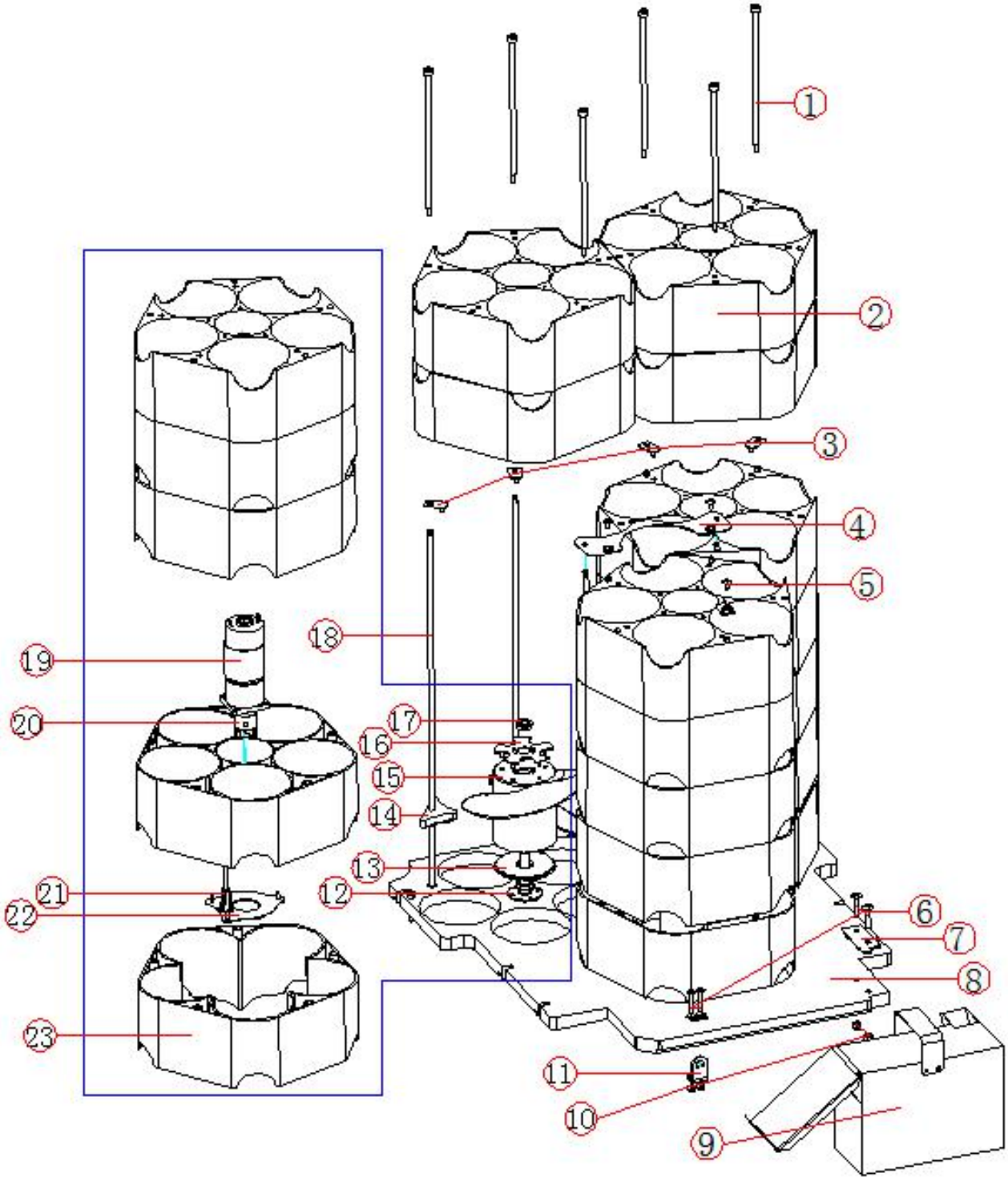

NO.	PART NAME	PICTURE	SPEC	QTY	REMARK
1	Cylindrical screw		M6*175mm black	6	SN.09-04
2	90 Five-hole hood		Yellow ABS 711	16	SN.07-01
3	Supporting rod fixing		201 Stainless steel	4	SN.03-14
4	Four-link Fixed Code for Support		201 Stainless steel	1	SN.03-15
5	Supporting rod fixing		201 Stainless steel	1	SN.03-14B
6	Large flat head machine silk		M5*25mm Stainless steel	4	
7	Token box clasp board		201 Stainless steel	1	
8	Capsule button board		15mm black ABS	1	SN.06-05
9	Token box		Q235	1	SN.03-03
10	lock nut		M5	4	
11	Token box lock		Q235 3mm thick	1	SN.03-07

12	Axis of stud		201 Stainless steel	3	SN.02-01
13	Stud base plate		Q235 4mm thick	3	SN.02-01
14	Single arm cushion plate		Transparent organic tablets	5	SN.06-09
15	Spiral release shaft		Yellow ABS 711	3	SN.07-02
16	Detection grating		Electrolytic plate 1.5mm thick	3	SN.03-02
17	Bearing		F688ZZ	3	
18	threader stud		201 Stainless steel	9	SN.02-10
19	Micro DC Motor		DC12V 5RPM	3	
20	Motor fork arm		201 Stainless steel	3	SN.03-03
21	Proximity switch		DC10V--30V	3	
22	Proximity switch board		Electrolytic plate 1.5mm thick	3	SN.03-01
23	90 Five-hole hood button		Yellow ABS 711	3	SN.07-01B

7-4 TOP AND LIFT PART INSTALLATION DISGRAM

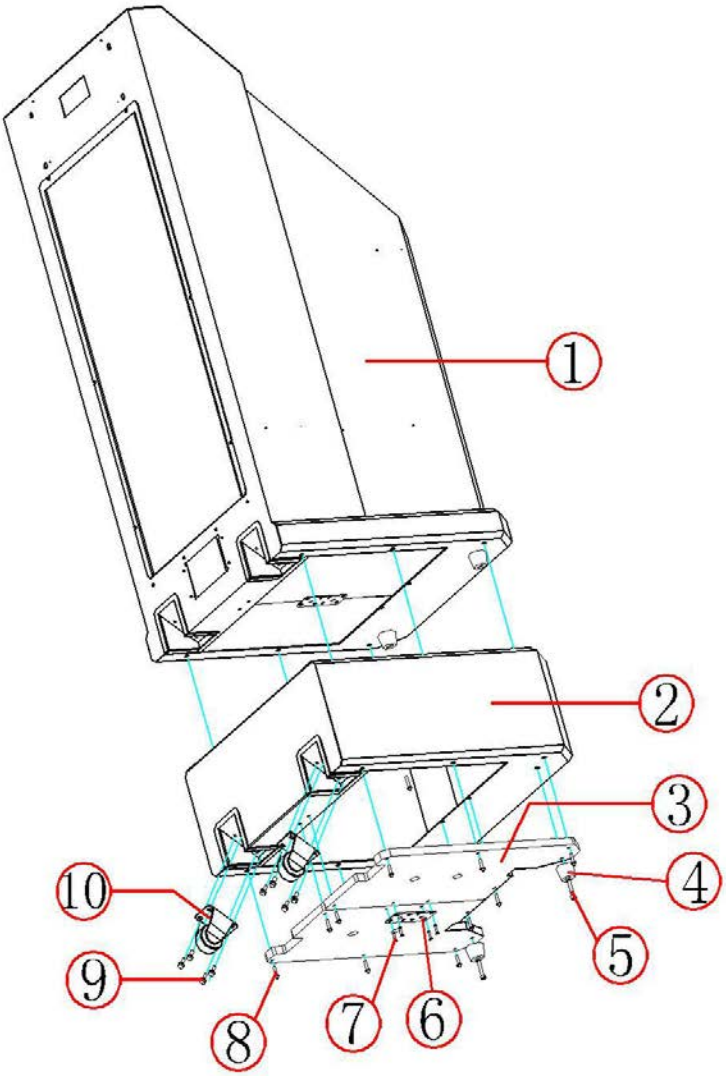

NO.	PART NAME	PICTURE	SPEC	QTY	REMARK
1	Main cabinet		Q235	1	SN.03-10
2	lift	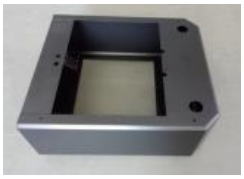	Q235	1	SN.03-12
3	Button board	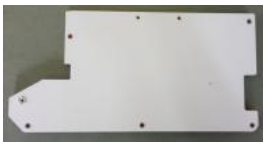	15mm thick	2	
4	Rubber foot pad		High 25mm	2	

5	Cylindrical head machine wire		M6*30mm	2	
6	1 Font connector		97*40mm	1	
7	Countersunk machine wire		M4*16mm	4	
8	Combination yarn		M5*25	10	
9	Combination yarn		M6*12	8	
10	wheel		2.0 inch	2	

8.HOW TO PLAY

1.Loop video

2. Click the “PUSH HERE TO START” button at the bottom right of the screen to enter the main menu

3. There are three interfaces providing for you to select; click the “VIEW SERIES” button to go to the purchase process;

4. Click the “PUSH HERE TO PURCHASE” button and there will show you the tip to ask you to rotate the capsule toy machine until a new capsule coming out.

8-1 Loop video:

Video 1

video 2

Video 3

Tip: click the "PSHU HERE TO START" button at the bottom right of the screen to enter the main menu when the video is showing

8-2 Main Menu:

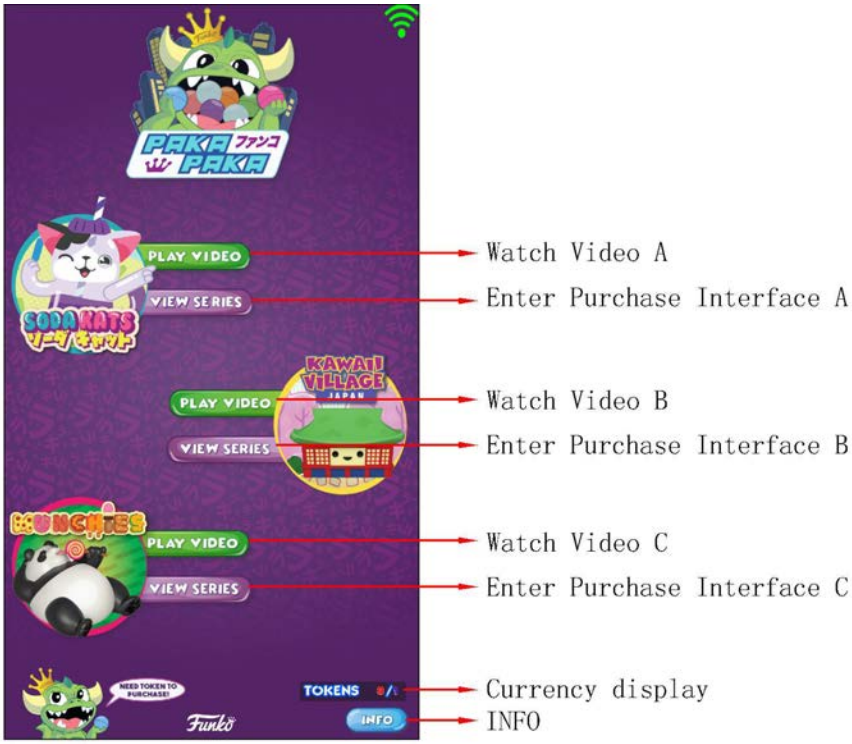

8-3 Purchase interface:

Purchase interface No1:

Purchase interface No 2

Purchase interface No3

8-4 Info interface:

8-5 Purchase notification interface:

8-6 Capsule notification interface

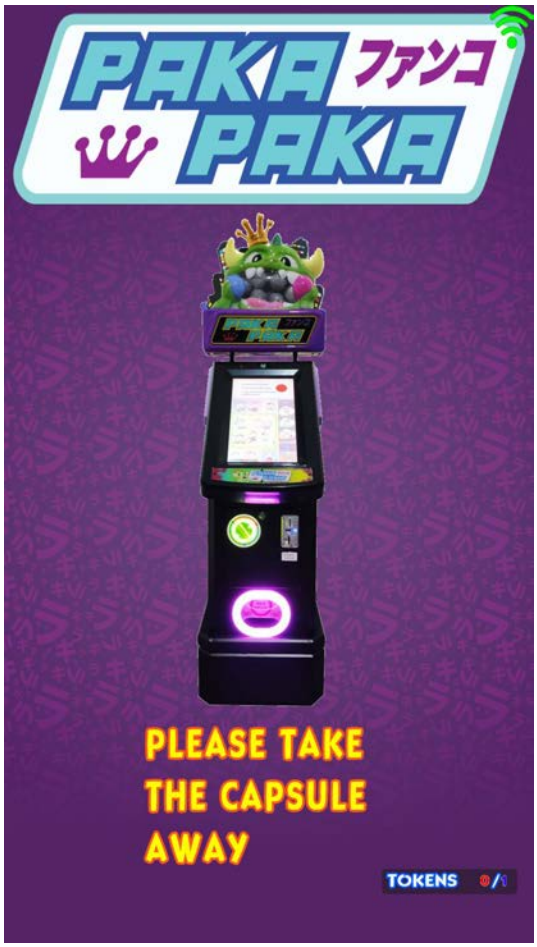

8-7 Setting interface:

Attention: Before entering the setting interface, please use the key(key type: LG1) to open the front door and press the red button to enter the setting.

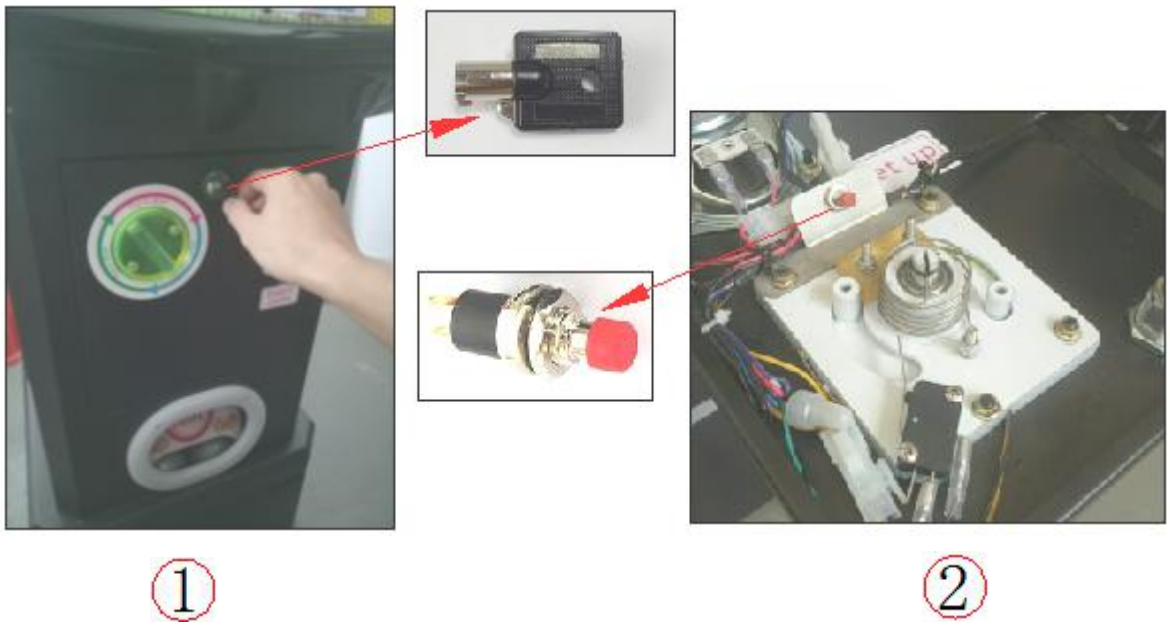

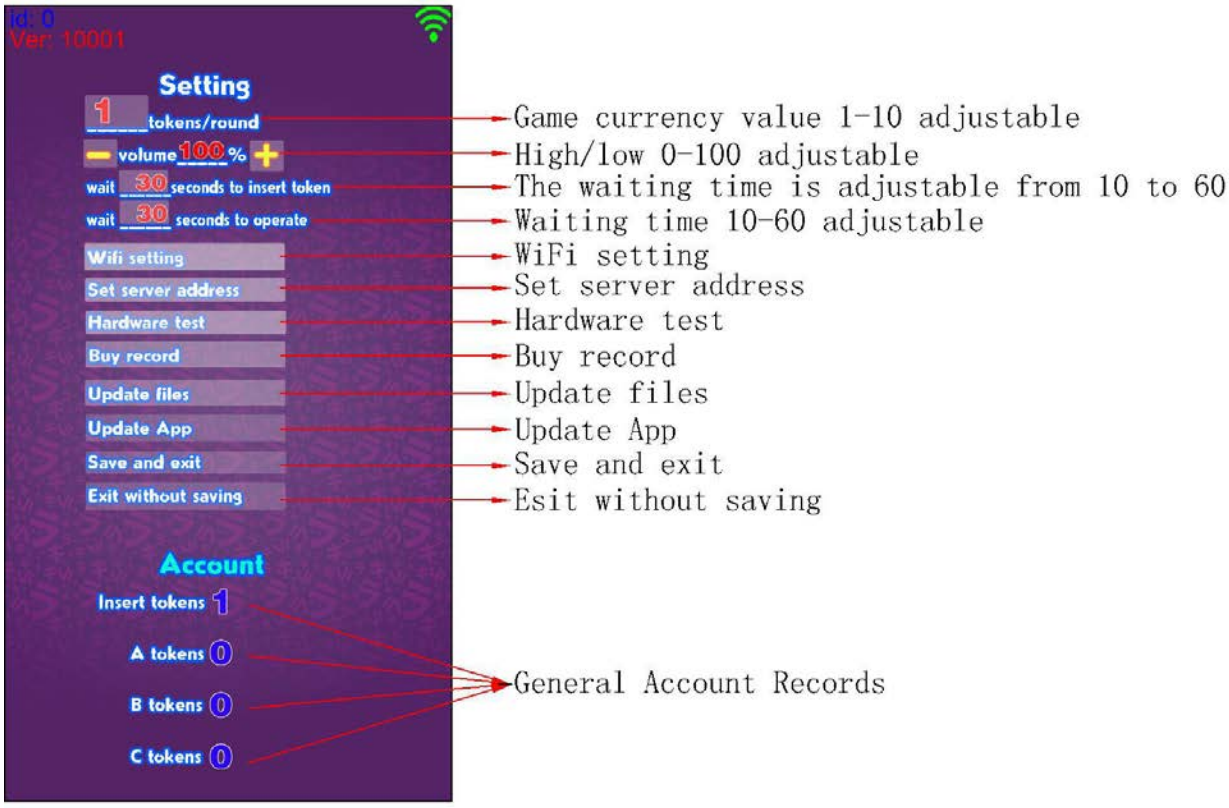

8-8 WIFI setting interface

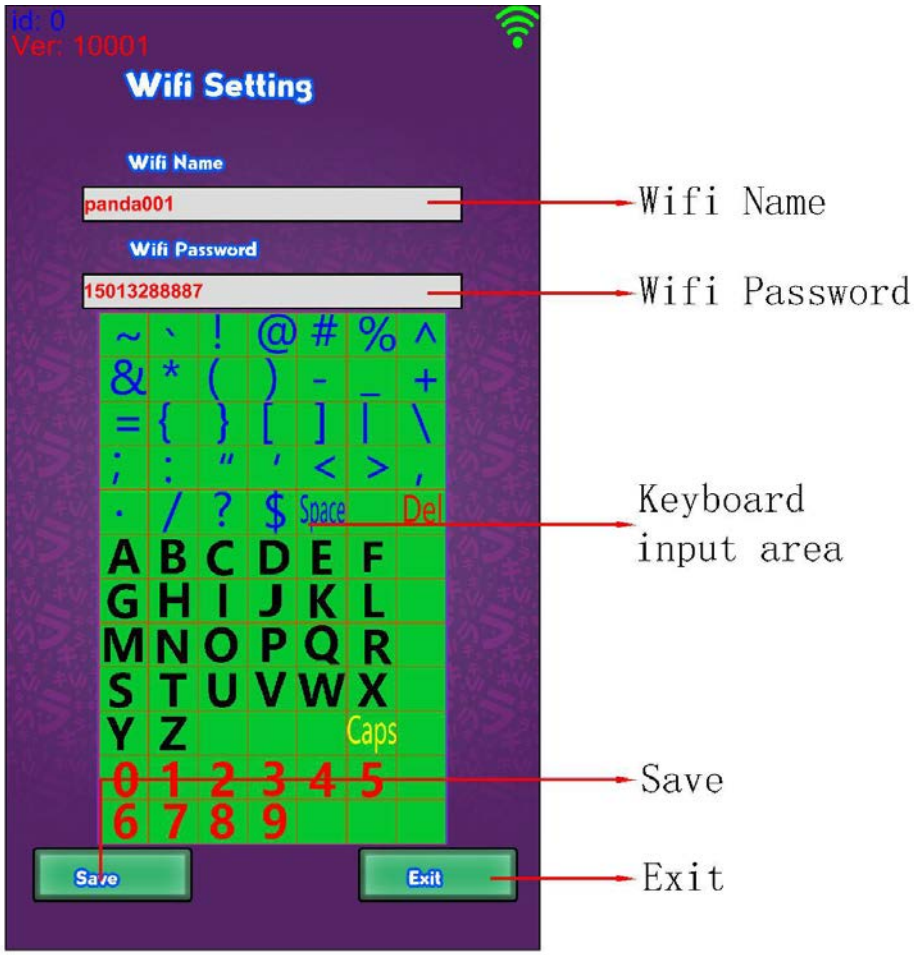

8-9 Server IP address setting interface:

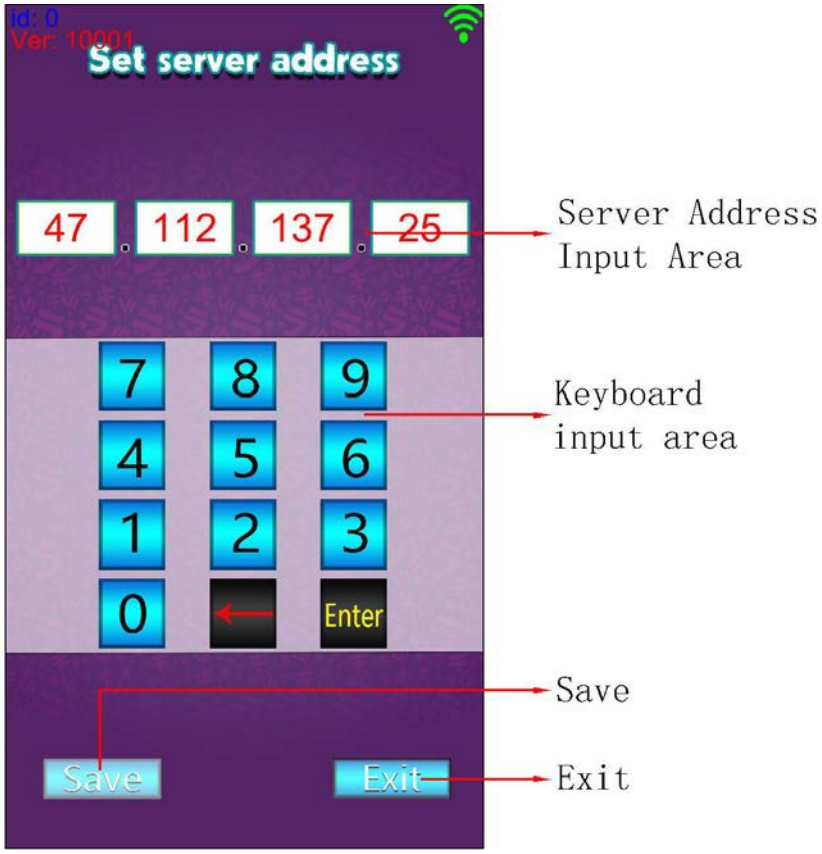

8-10 Hardware test interface

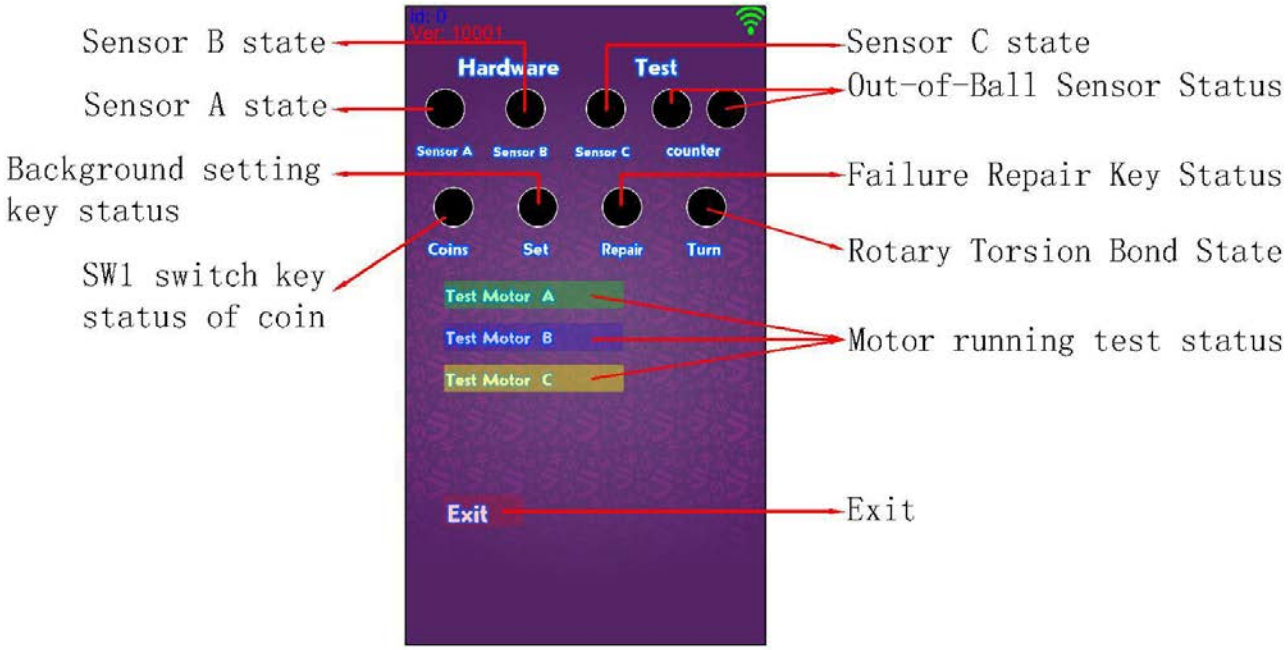

8-11 Hardware test steps and errors handling

Attention: Before entering the hardware testing interface, please follow the below steps one by one. As shown below:

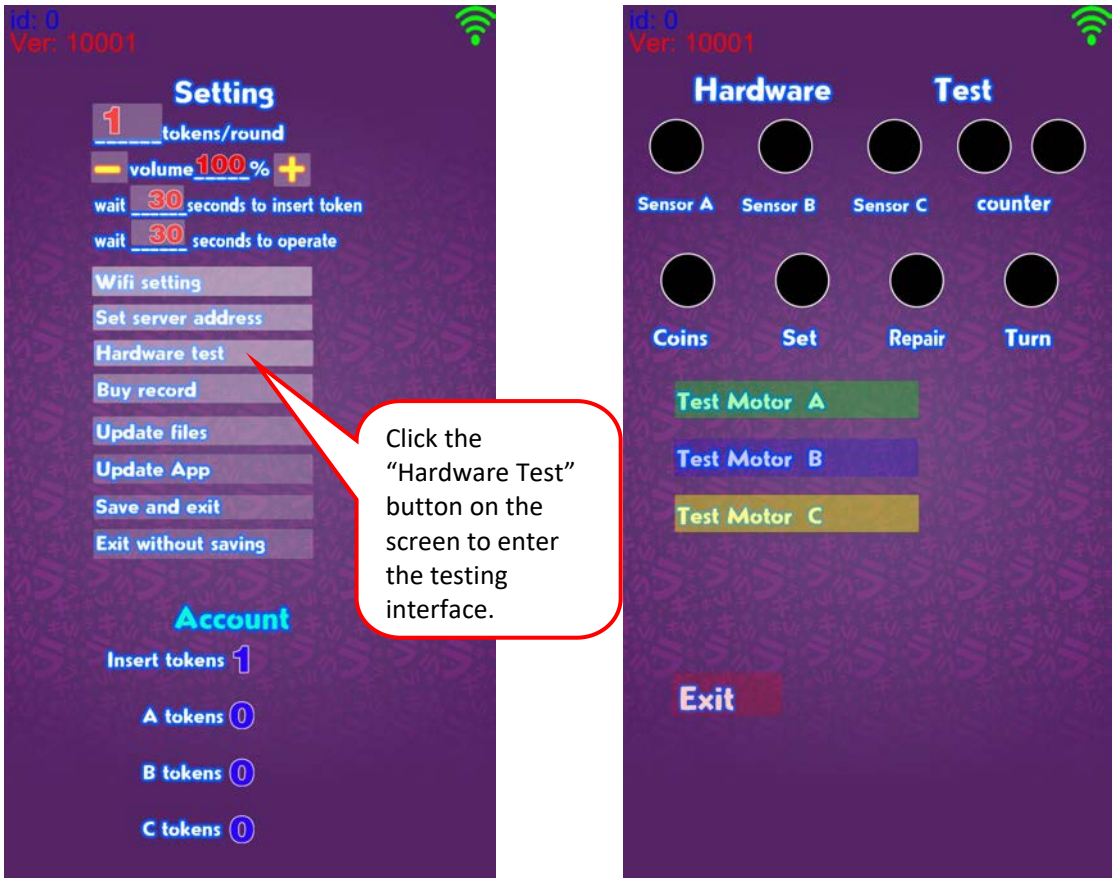

③ ④

⚠ Please don't ignore the hardware test which is the operation core of the machine. The hardware has close relation with machine broken down. So please read this instruction seriously.

The hardware test is mainly used to check whether above hardware works normally or not. The following below is to check whether each of hardware works or not.

8-12. Sensor ABC testing:

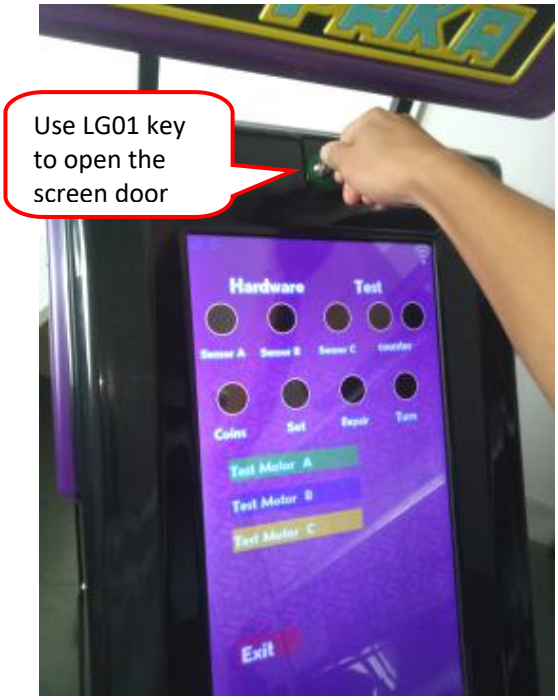

①

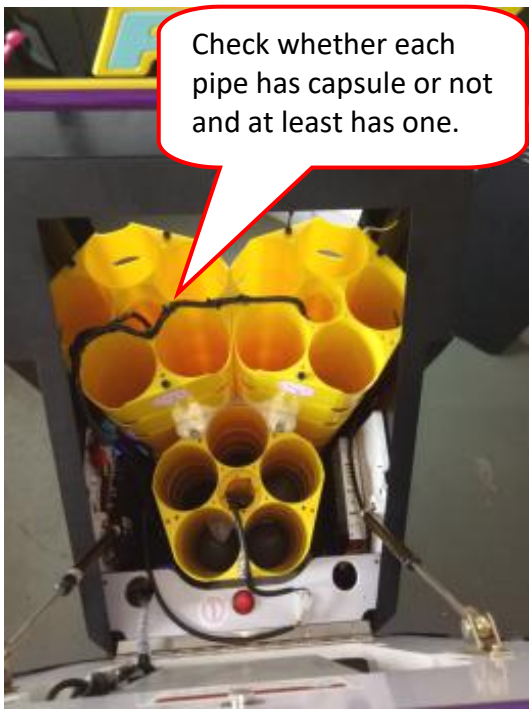

②

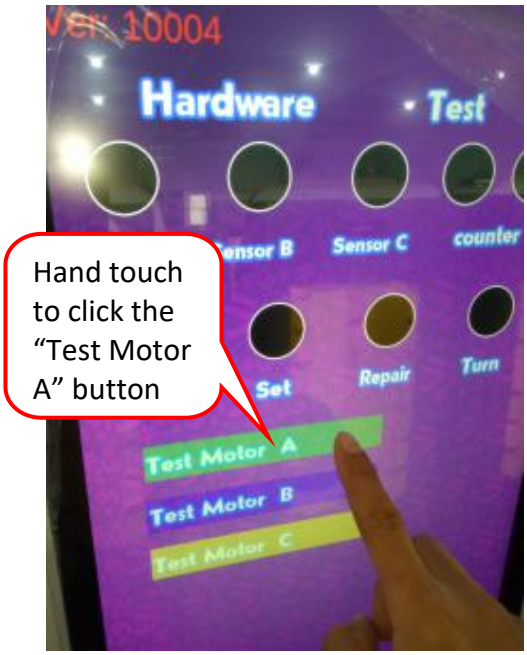

③

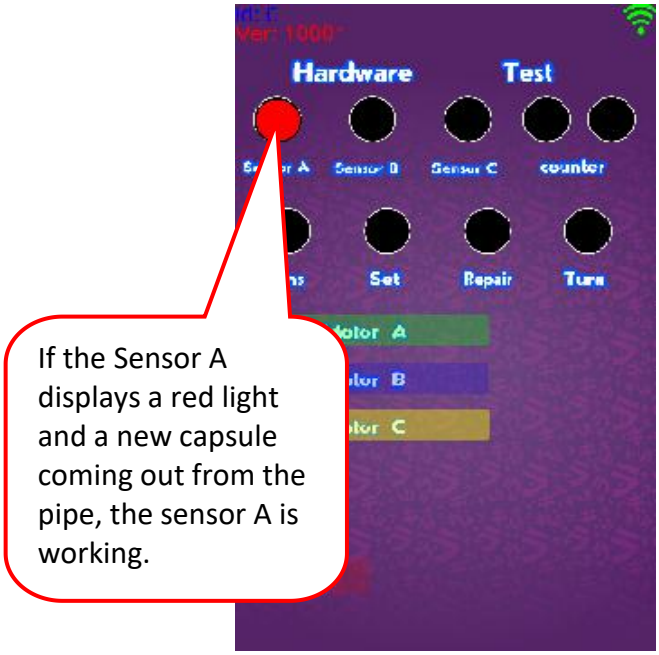

④

If the sensor A fails to run as normal, then need to replace the Senor. The replacement process is following as below:

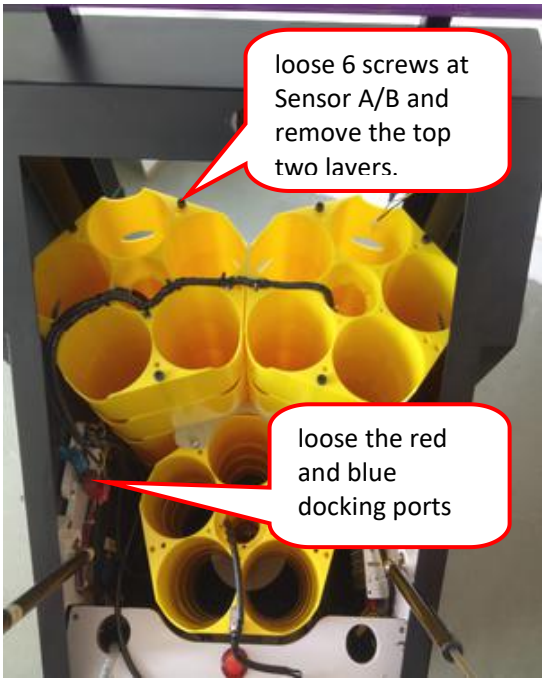
loose 6 screws at Sensor A/B and remove the top two layers.
loose the red and blue docking ports

①

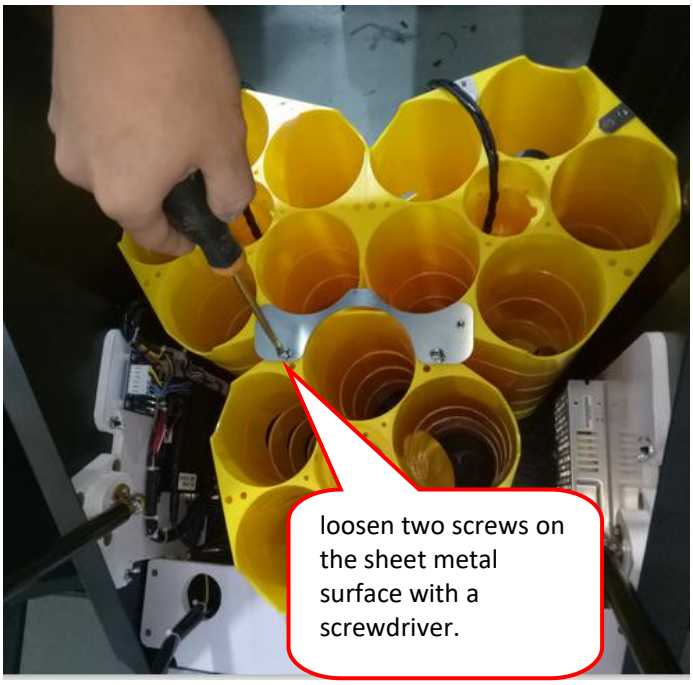
loosen two screws on the sheet metal surface with a screwdriver.

②

Slowly pull out the 5-hole cover on the 5th floor of

③

Slowly pull out the 5th hole cover on the 4th floor of Sensor A

④

Slowly pull out the 5-hole cover on the third floor of Sensor A

5

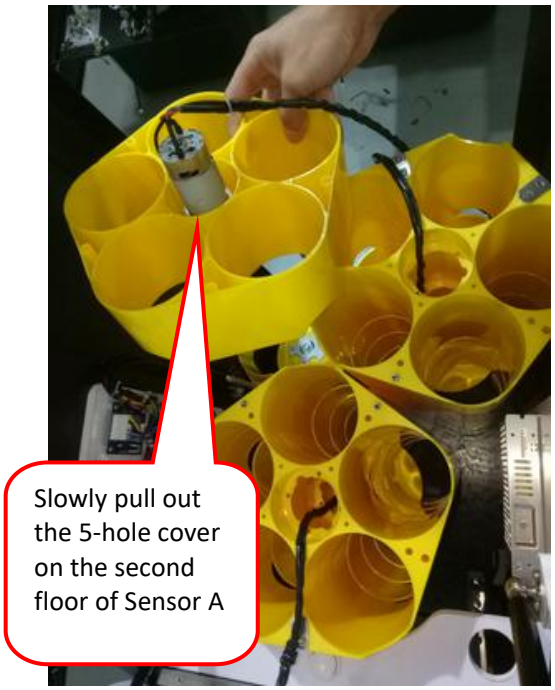
Slowly pull out the 5-hole cover on the second floor of Sensor A

6

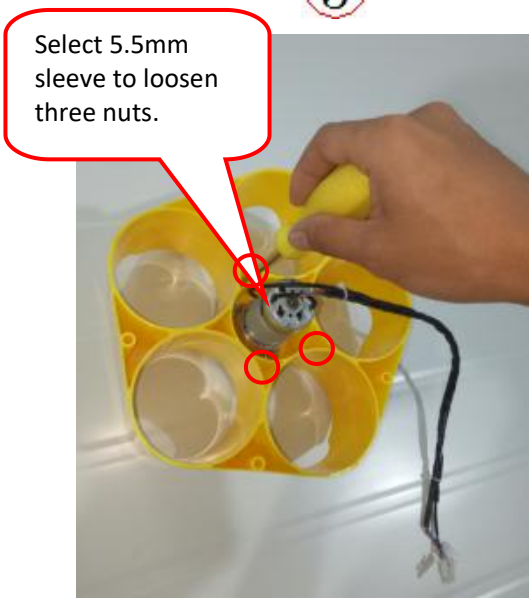
Select 5.5mm sleeve to loosen three nuts.

7

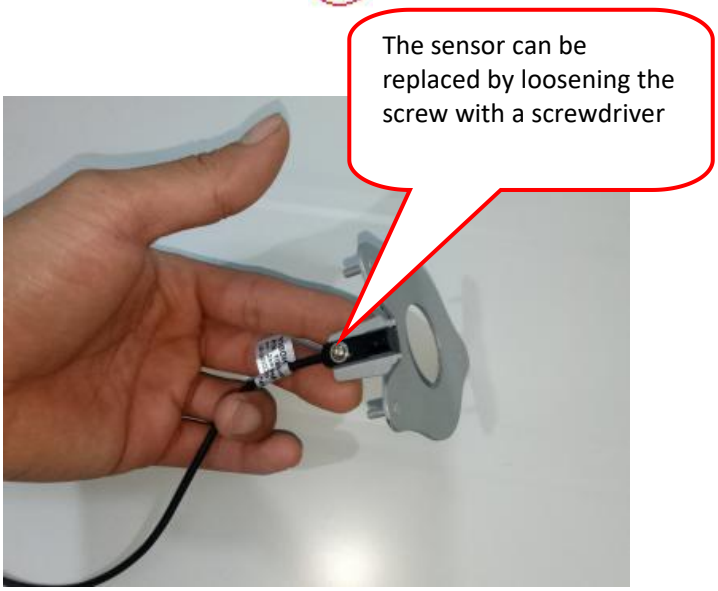
The sensor can be replaced by loosening the screw with a screwdriver

8

2. Capsule channel sensor testing:

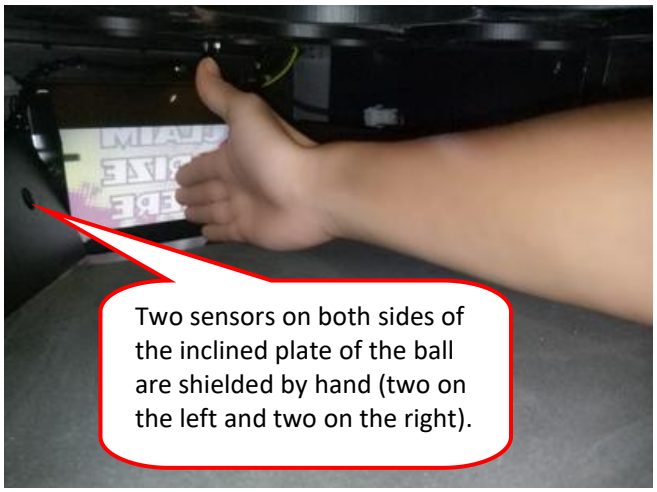

①

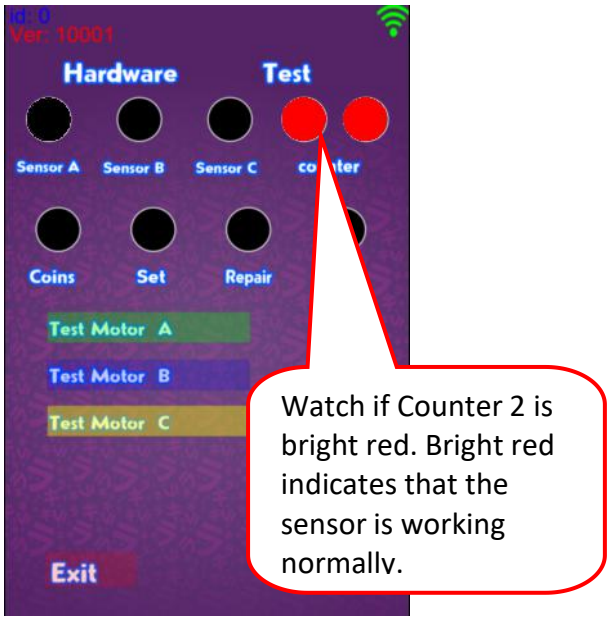

②

If the out-of-ball sensor does not work properly, a new sensor needs to be replaced. The replacement steps are as follows:

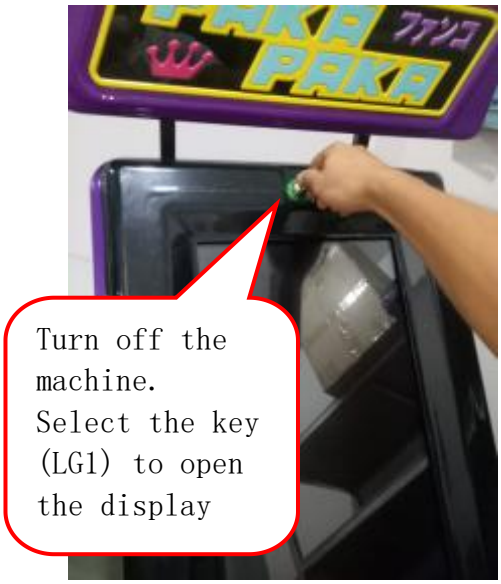

①

②

Select a 5mm wrench to loosen the top six screws and take out the top two layers.

Loosen the red and blue docking ports

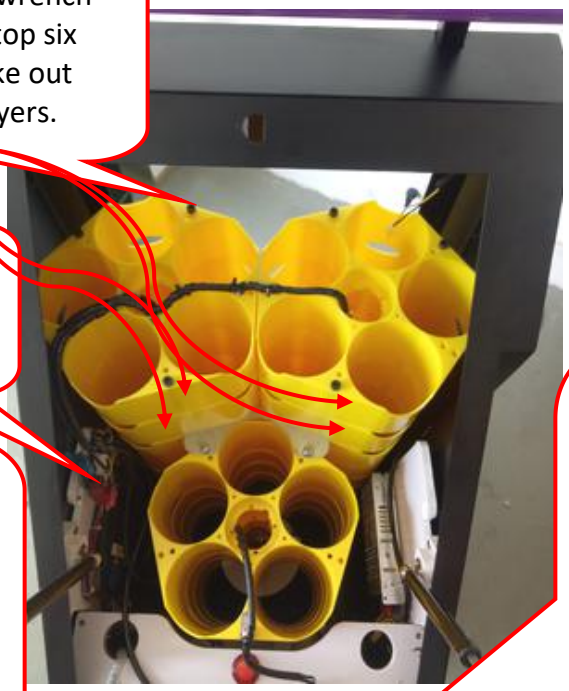

Hands will be gifts mechanism parts lifted at the same time, to both sides of the screw position, it is best to operate both front and back at the same time.

③

When the whole mechanism is lifted, it passes through three screw rods at the top, right and left, then according to this figure, move forward, and place the screw firmly in the slot clamp.

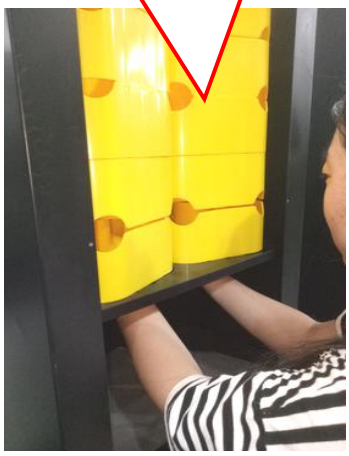

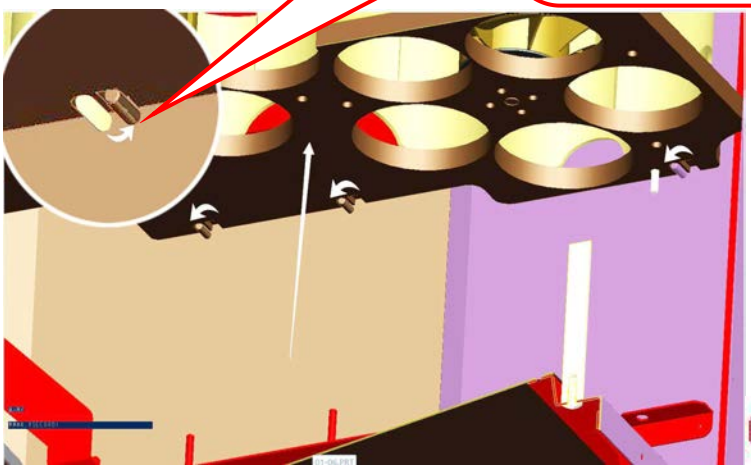

④

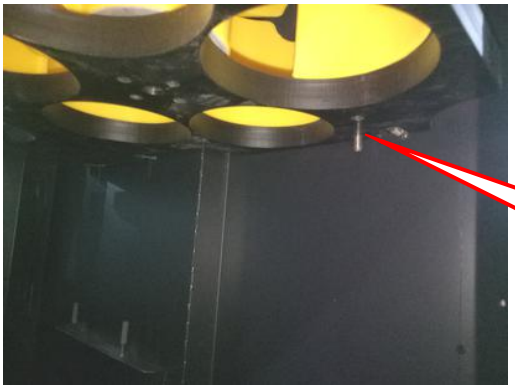

Status of Screw Support Gift

⑤

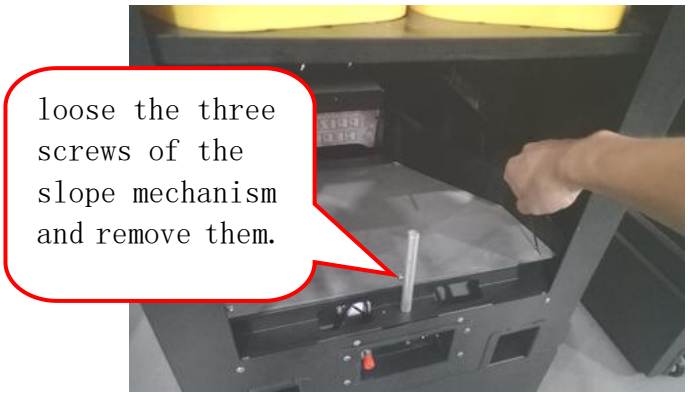

6

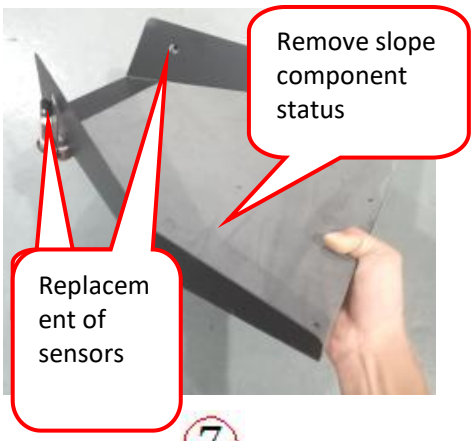

7

3. coin selector test:

1

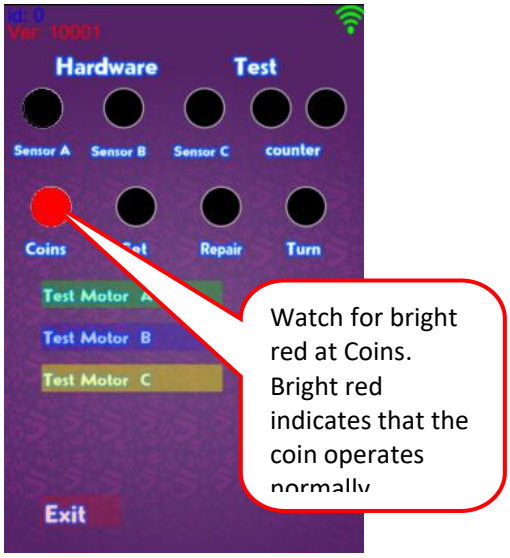

2

If the coin selector is not working properly, a new coin must be replaced. The replacement steps are as follows:

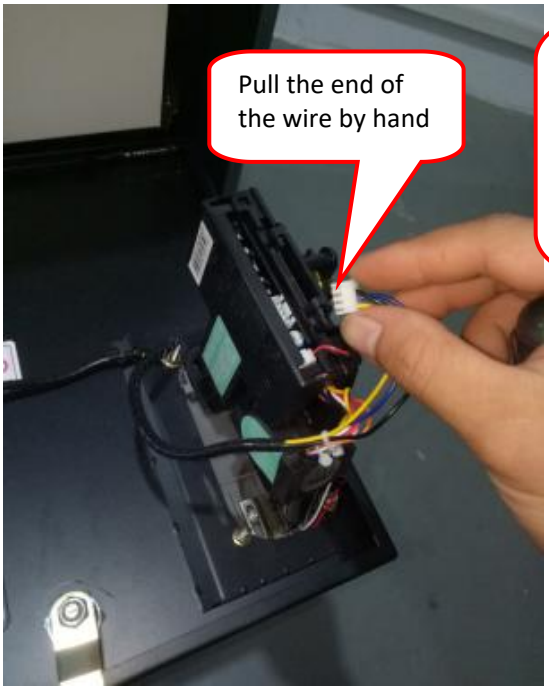

①

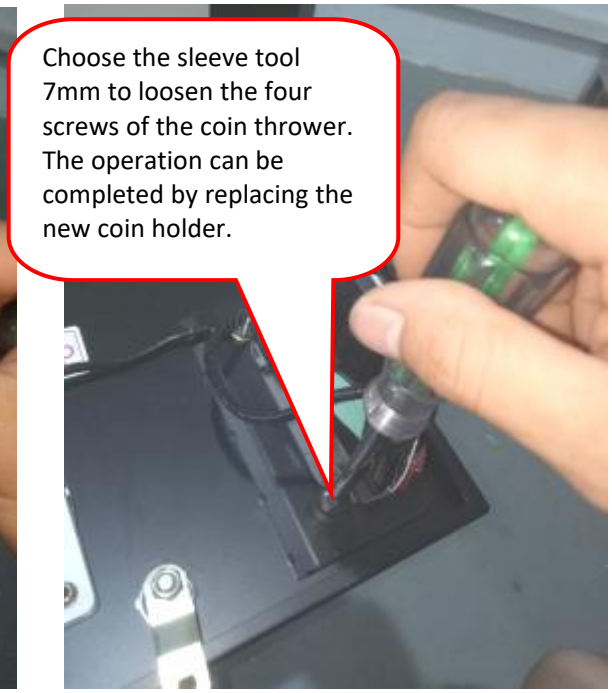

②

4. SET UP BUTTON TEST:

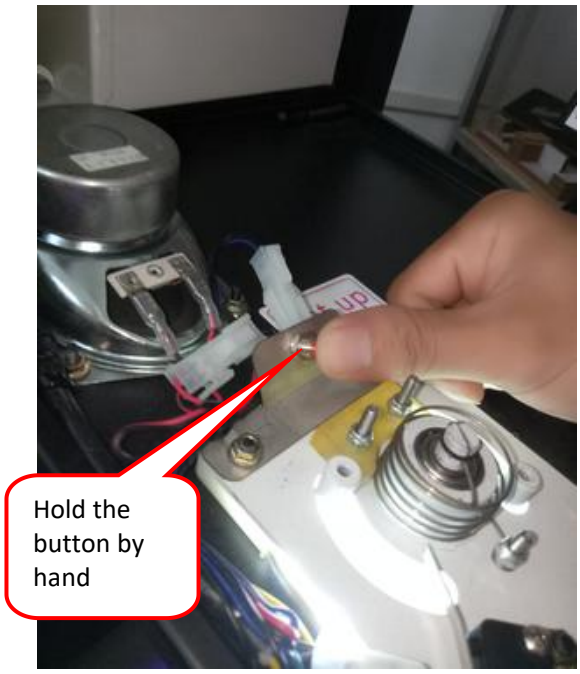

①

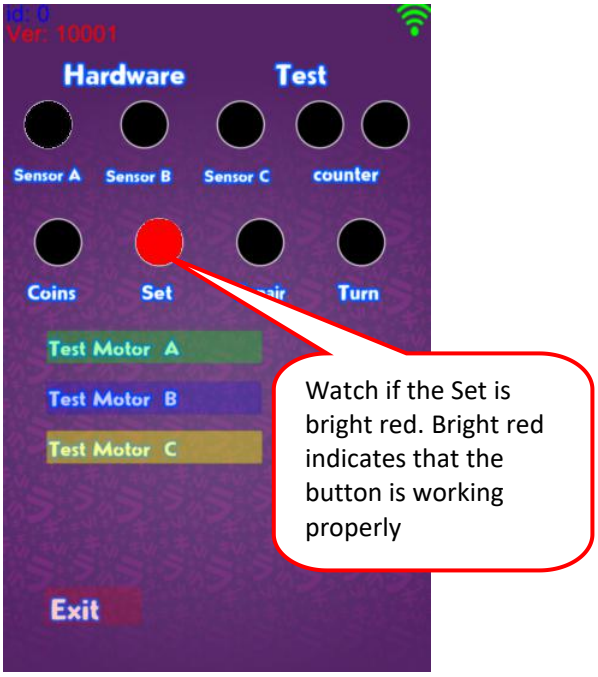

②

If the button does not work properly, a new button needs to be replaced. The replacement steps are as follows:

①

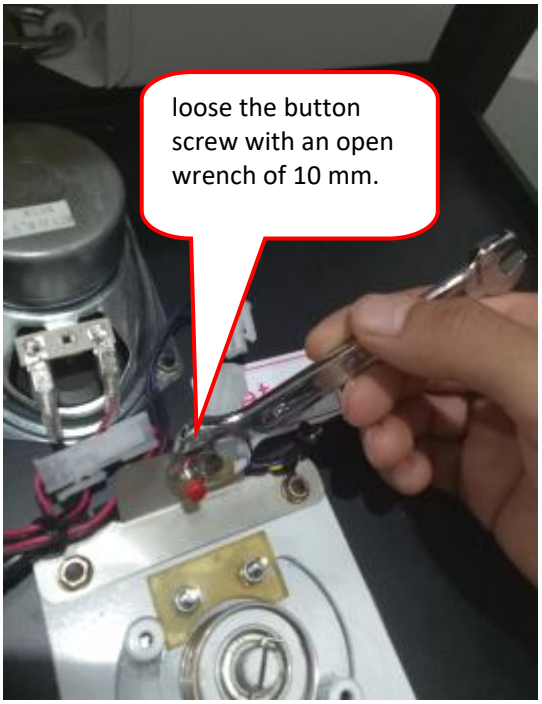

②

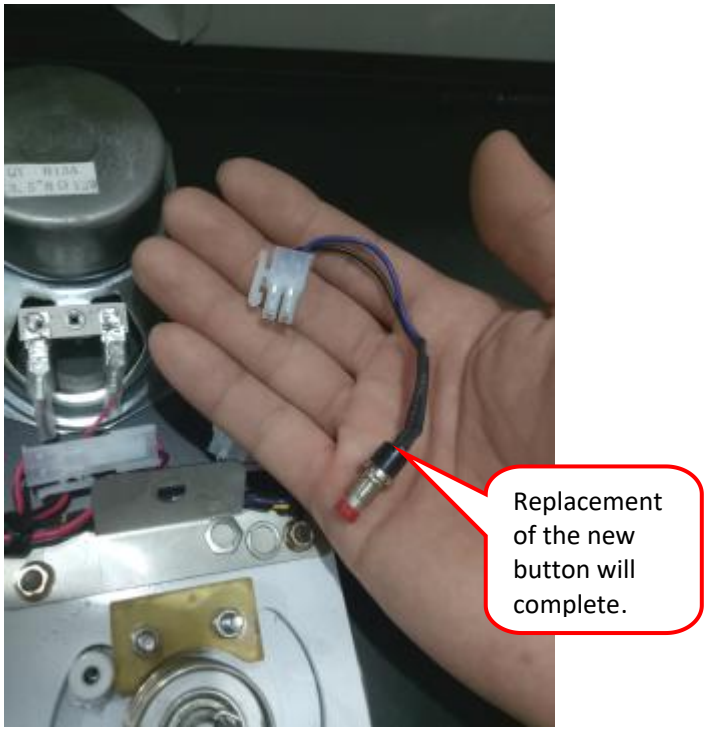

③

5. Error recover button test:

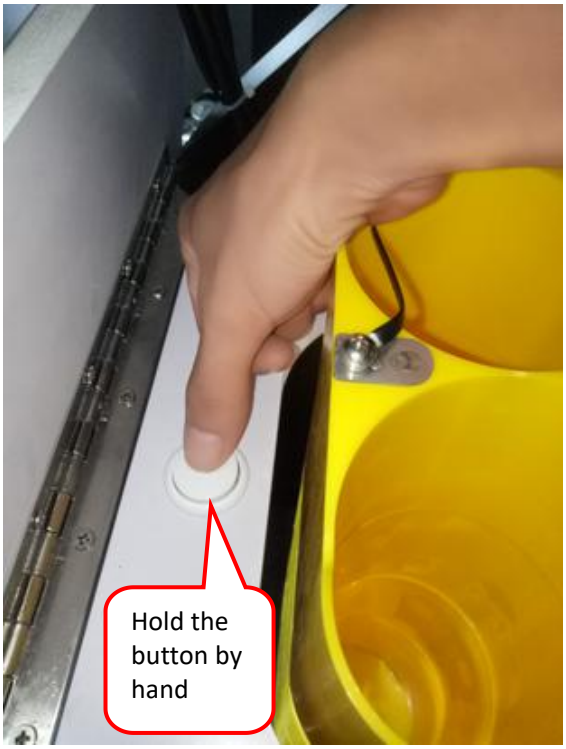

①

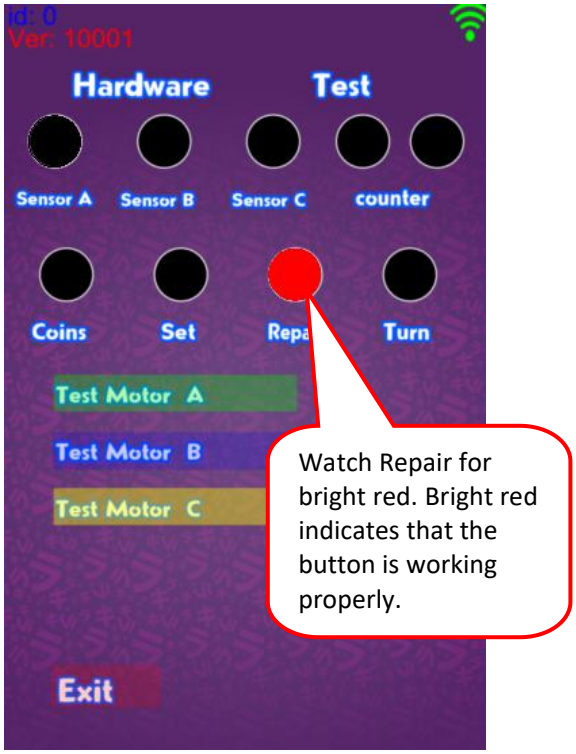

②

6. Dial test:

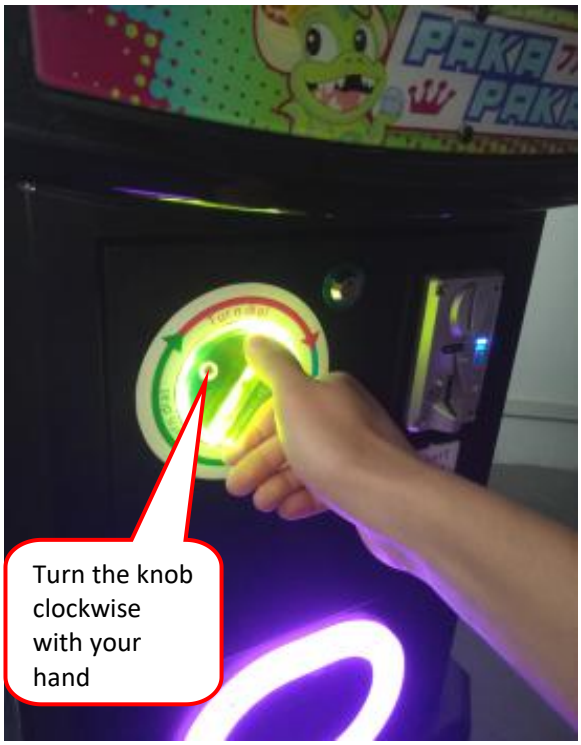

①

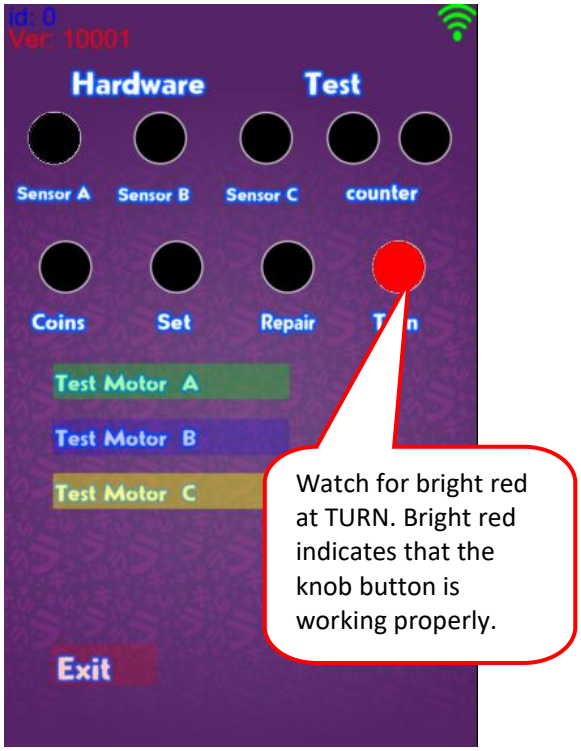

②

If the knob does not work properly, the knob switch should be replaced. The replacement steps are as follows:

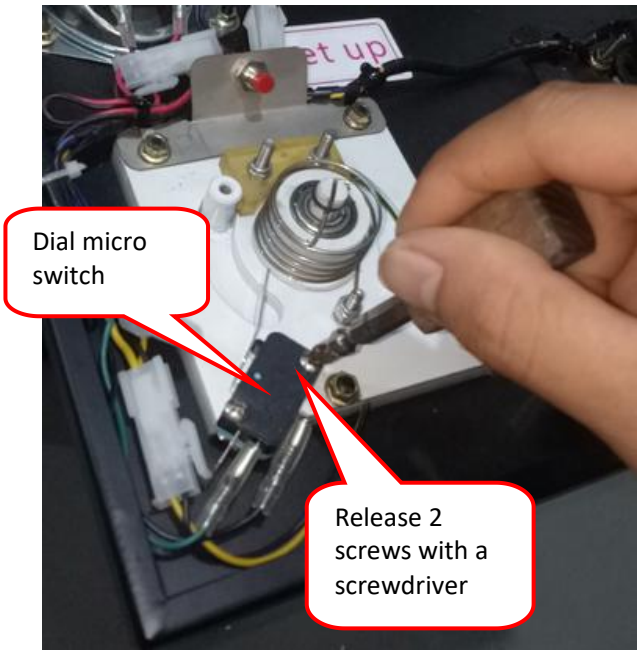

①

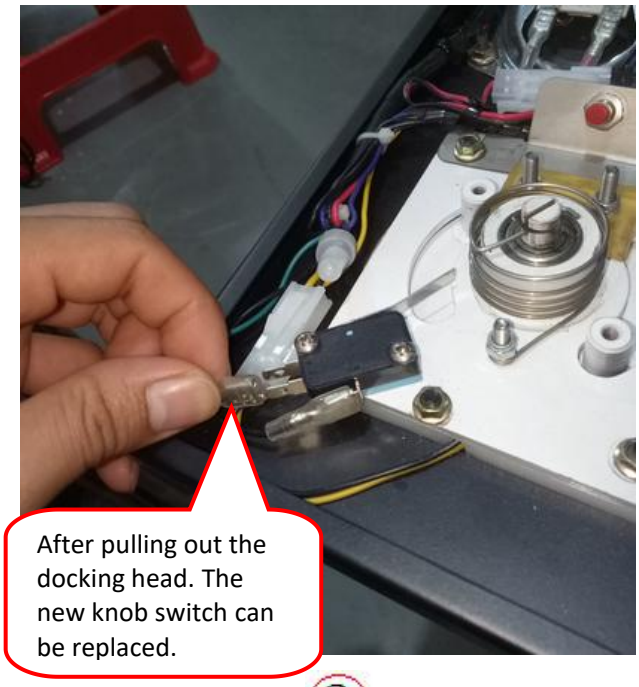

②

8-12 Purchase Record Interface:

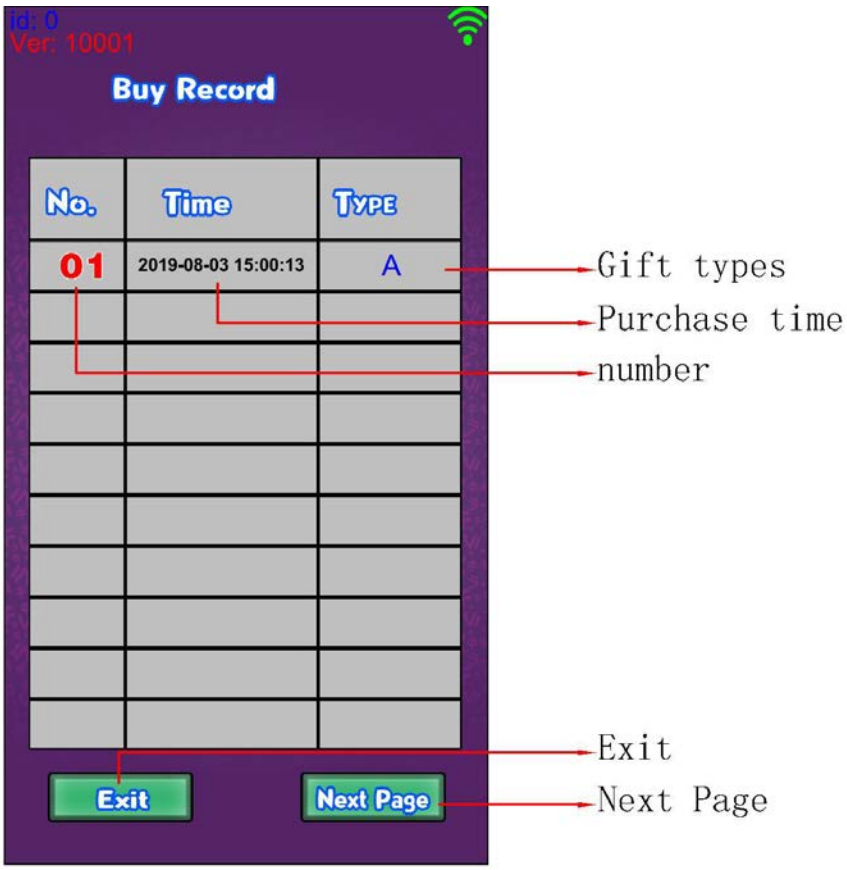

9. APP Version Updating Method and Steps:

Attention: firstly, make sure the machine power on stably; then following the below steps to update the APP version:

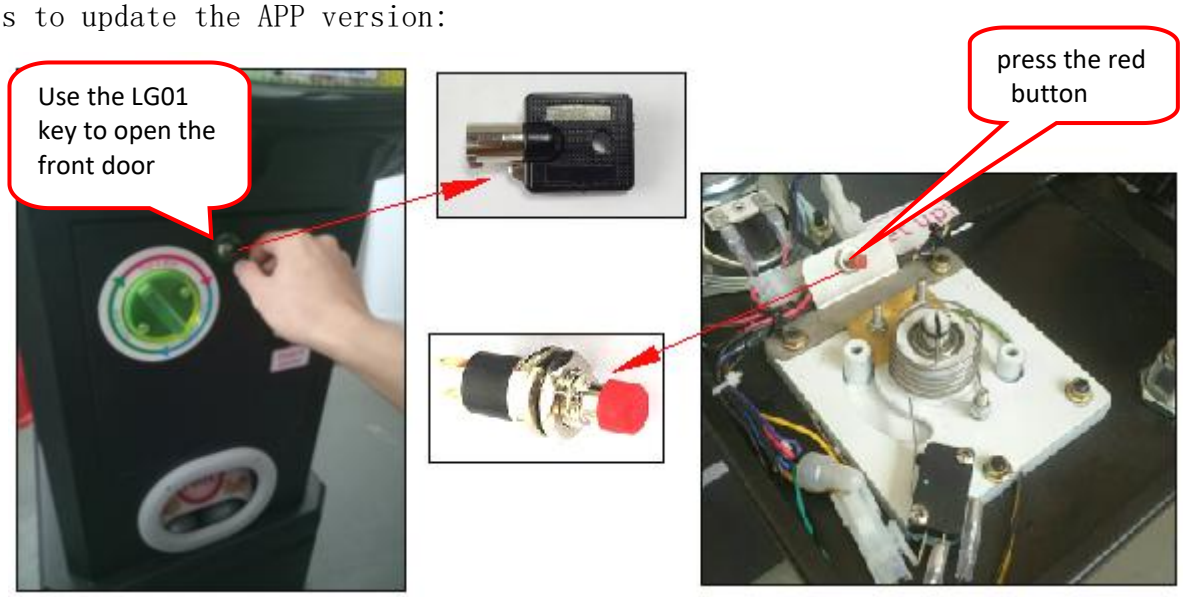

①

②

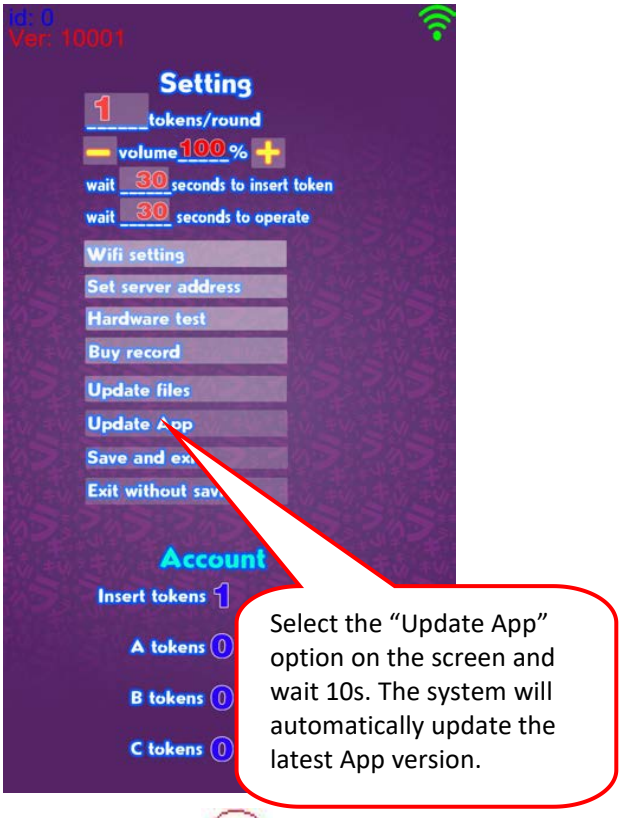

③

④

10. How to updated video

Note: First of all, ensure that the machine is in a stable power-on state. Then update it through the following steps. As shown in the following figure:

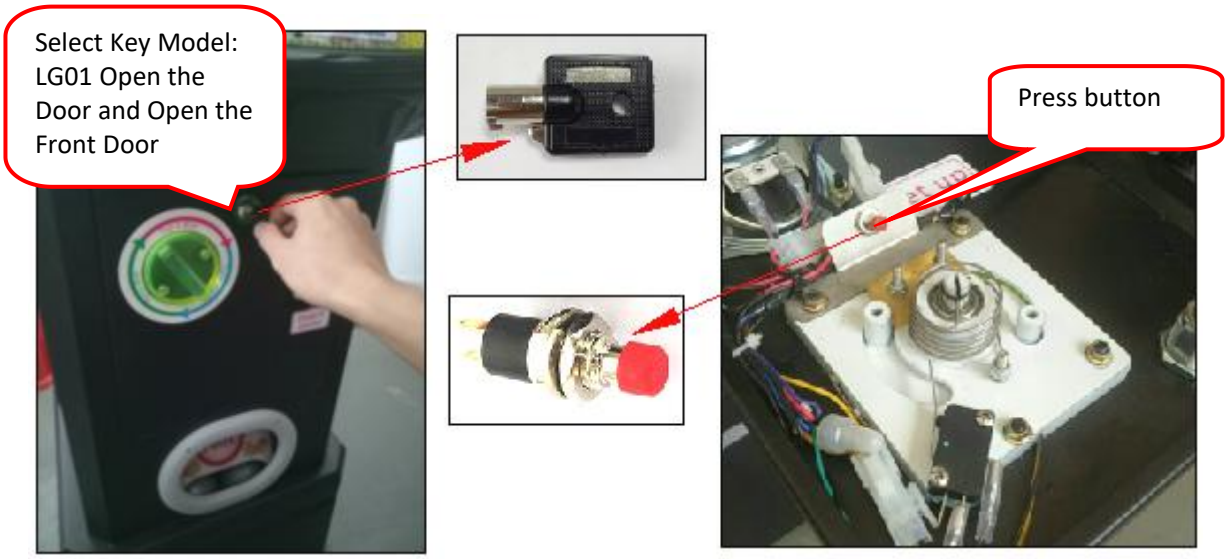

① ②

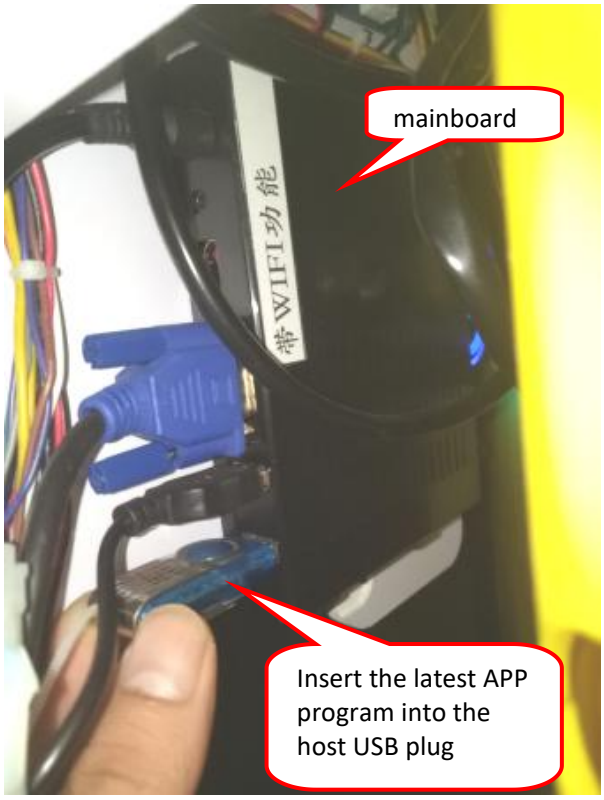

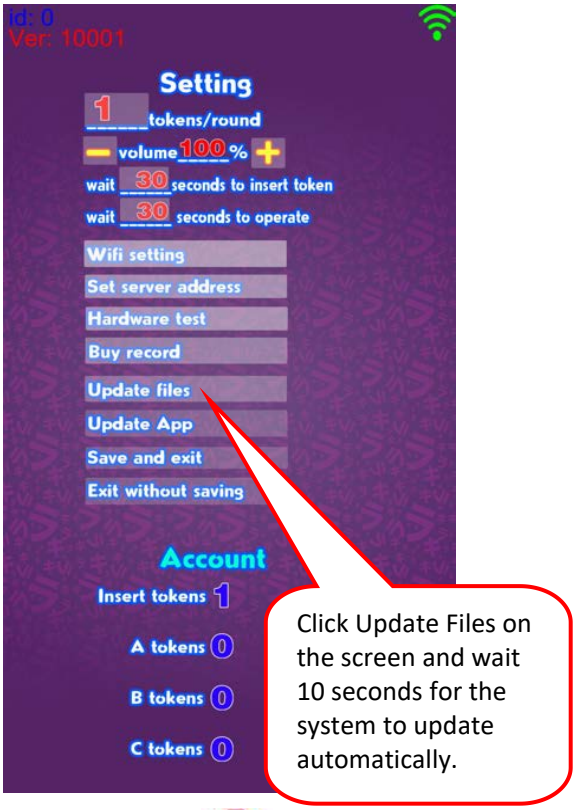

③ ④

11. How to change the Mainboard?

①

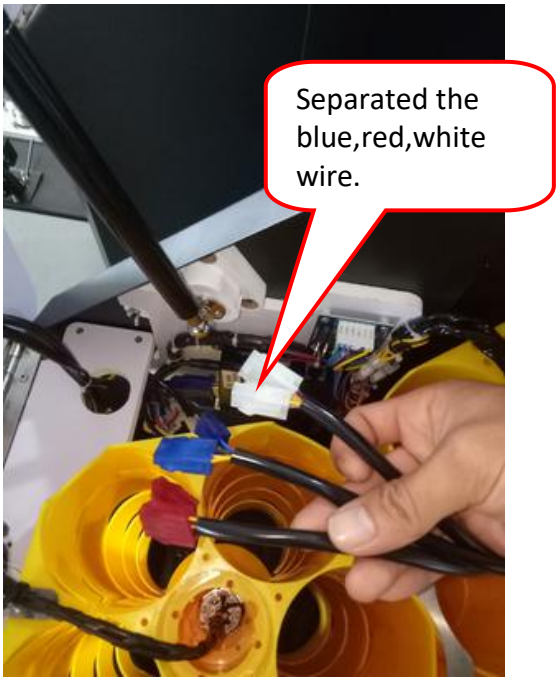

②

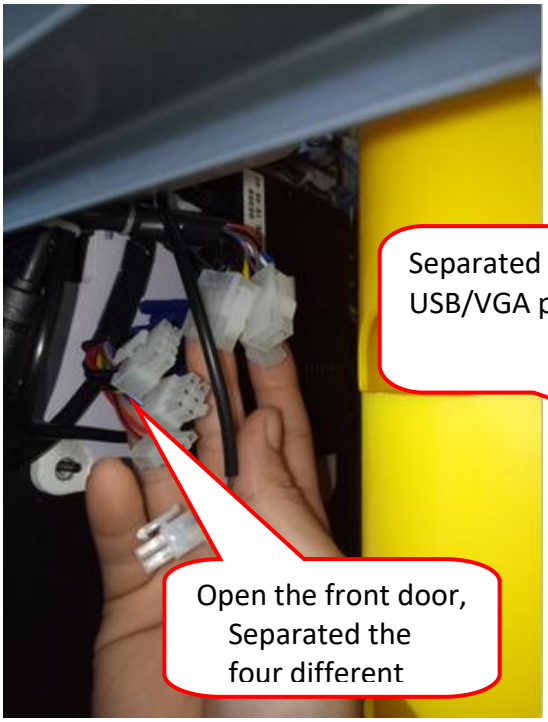

③

④

Find this four butterfly nut, loosen it !

Move out the wooden board

5

6

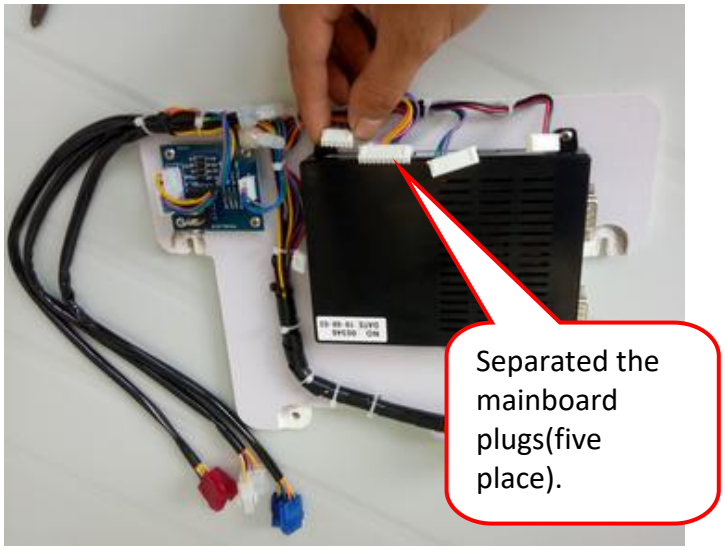
Separated the mainboard plugs(five place).

7

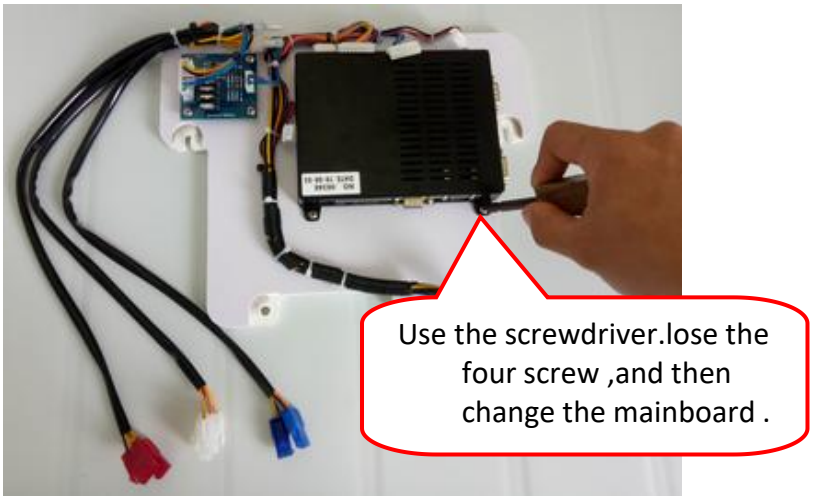
Use the screwdriver.lose the four screw ,and then change the mainboard .

12. CIRCUIT DIAGRAM

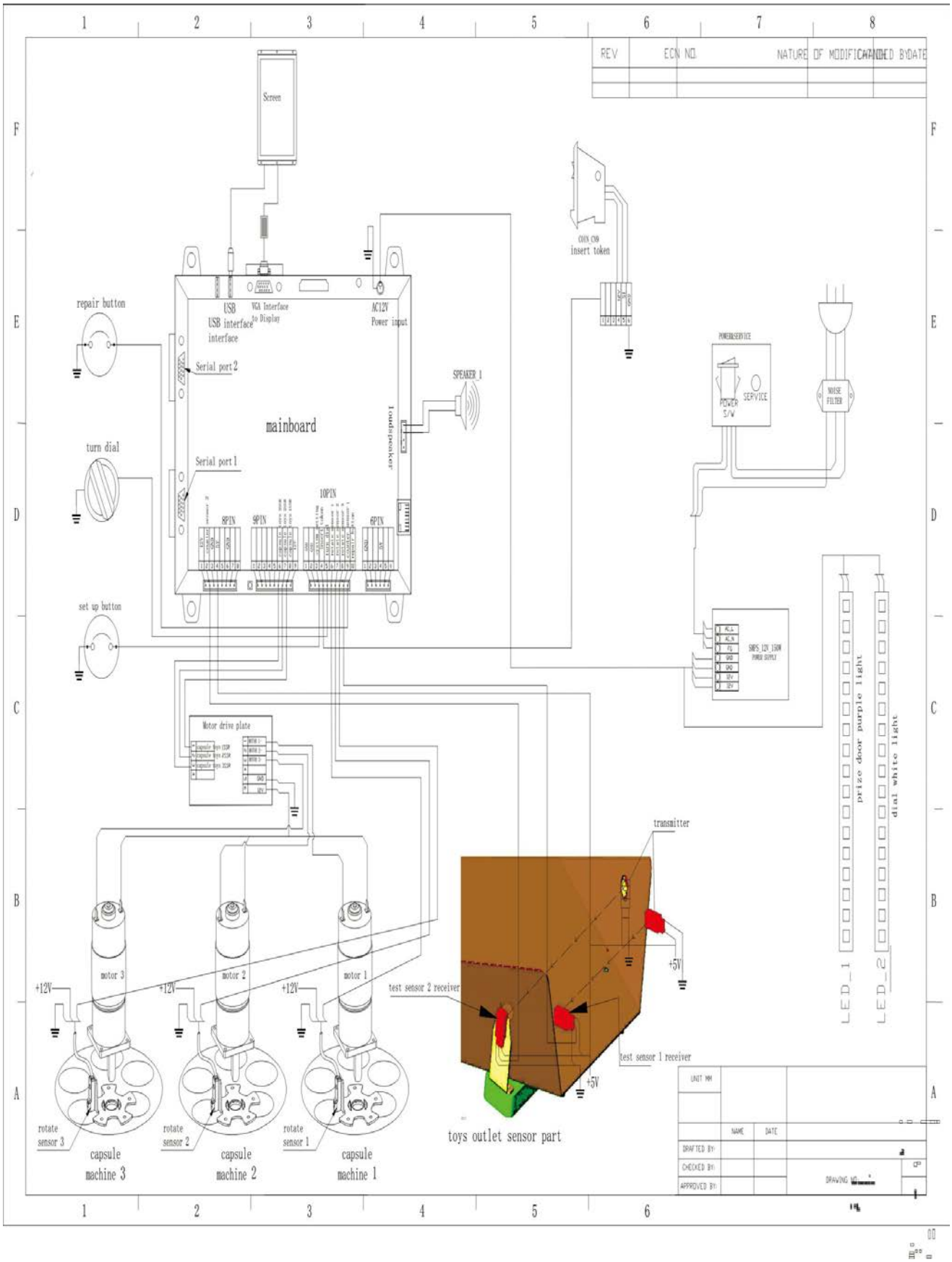

Note: If the above illustrative pictures are changed, the physical machine is the standard.

Warning: Changes or modifications to this unit not expressly approved by the party responsible for compliance could void the user's authority to operate the equipment.

NOTE: This equipment has been tested and found to comply with the limits for a Class B digital device, pursuant to Part 15 of the FCC Rules. These limits are designed to provide reasonable protection against harmful interference in a residential installation. This equipment generates, uses and can radiate radio frequency energy and, if not installed and used in accordance with the instructions, may cause harmful interference to radio communications.
However, there is no guarantee that interference will not occur in a particular installation. If this equipment does cause harmful interference to radio or television reception, which can be determined by turning the equipment off and on, the user is encouraged to try to correct the interference by one or more of the following measures:
† Reorient or relocate the receiving antenna.
† Increase the separation between the equipment and receiver.
† Connect the equipment into an outlet on a circuit different from that to which the receiver is connected.
† Consult the dealer or an experienced radio/TV technician for help.

This device complies with Part 15 of the FCC Rules. Operation is subject to the following two conditions:(1)this device may not cause harmful interference, and (2) this device must accept any interference received, including interference that may cause undesired operation.

FCC RF Radiation Exposure Statement Caution:
To maintain compliance with the FCC's RF exposure guidelines,
place the product at least 20cm from nearby persons.