MEASUREMENT REPORT

FCC PART 15.249 / RSS-210

FCC ID:	2AUBX-F4
Application:	Dongguan Solid Model Technology Co., Ltd
Application Type:	Certification
Product:	2.4GHz Radio Control System
Model No.:	F4
Serial Model No.:	S4
Brand Name:	FMS
FCC Classification:	Part 15 low power transceiver, RX verified (DXT)
FCC Rule Part(s):	Part 15.249
Test Procedure(s):	ANSI C63.10 - 2013
Test Date:	July 09 ~ August 25, 2019

Reviewed By: Sunny Sun

(Sunny Sun)

Approved By: Robin Wu

(Robin Wu)

ACCREDITED
TESTING LABORATORY
CERTIFICATE #3628.01

The test results relate only to the samples tested.

This equipment has been shown to be capable of compliance with the applicable technical standards as indicated in the measurement report and was tested in accordance with the measurement procedures specified in ANSI C63.10-2013. Test results reported herein relate only to the item(s) tested.

The test report shall not be reproduced except in full without the written approval of MRT Technology (Suzhou) Co., Ltd.

Revision History

Report No.	Version	Description	Issue Date	Note
1907RSU017-U1	Rev. 01	Initial Report	08-28-2019	Valid

CONTENTS

Description Page

1. INTRODUCTION 6

1.1. Scope 6
1.2. MRT Test Location 6

2. PRODUCT INFORMATION 7

2.1. Equipment Description 7
2.2. Operation Frequency and Channel List 8
2.3. Test Configuration 9
2.4. EMI Suppression Device(s)/Modifications 9
2.5. Labeling Requirements 9

3. DESCRIPTION OF TEST 10

3.1. Evaluation Procedure 10
3.2. AC Line Conducted Emissions 10
3.3. Radiated Emissions 11

4. ANTENNA REQUIREMENTS 12

5. TEST EQUIPMENT CALIBRATION DATE 13

6. MEASUREMENT UNCERTAINTY 15

7. TEST RESULT 16

7.1. Summary 16
7.2. Conducted Emission 17
7.2.1. Test Limit 17
7.2.2. Test Setup 17
7.2.3. Test Result 17
7.3. Radiated Emission 18
7.3.1. Test Limit 18
7.3.2. Test Setup 19
7.3.3. Test Result 20
7.4. Radiated Restricted Band Edge Measurement 25
7.4.1. Test Limit 25
7.4.2. Test Setup 26
7.4.3. Test Result 27
7.5. 20dB Spectrum Bandwidth Measurement 31
7.5.1. Test Limit 31
7.5.2. Test Procedure used 31

7.5.3. Test Setting.....31
7.5.4. Test Setup 31
7.5.5. Test Result.....32

8. CONCLUSION.....33

Appendix A - Test Setup Photograph.....34

Appendix B - EUT Photograph 35

§2.1033 General Information

Applicant:	Dongguan Solid Model Technology Co., Ltd
Applicant Address:	3/F, Building B, 3rd Industry Zone, Matigang, Dalingshan Town, Dongguan City, China 523810
Manufacturer:	Dongguan Solid Model Technology Co., Ltd
Manufacturer Address:	3/F, Building B, 3rd Industry Zone, Matigang, Dalingshan Town, Dongguan City, China 523810
Test Site:	MRT Technology (Suzhou) Co., Ltd
Test Site Address:	D8 Building, No.2 Tian'edang Rd., Wuzhong Economic Development Zone, Suzhou, China

Test Facility / Accreditations

Measurements were performed at MRT Laboratory located in Tian'edang Rd., Suzhou, China.

- **MRT facility is a FCC registered (MRT Reg. No. 893164) test facility with the site description report on file and has met all the requirements specified in ANSI C63.4-2014.**
- **MRT facility is an IC registered (MRT Reg. No. 11384A-1) test laboratory with the site description on file at Industry Canada.**
- **MRT facility is a VCCI registered (R-20025, G-20034, C-20020, T-20020) test laboratory with the site description on file at VCCI Council.**
- **MRT Lab is accredited to ISO 17025 by the American Association for Laboratory Accreditation (A2LA) under the American Association for Laboratory Accreditation Program (A2LA Cert. No. 3628.01) in EMC, Telecommunications, Radio and SAR testing.**

ilac-MRA
A2LA

Accredited Laboratory

A2LA has accredited

MRT TECHNOLOGY (SUZHOU) CO., LTD.

Suzhou, Jiangsu, People's Republic of China

for technical competence in the field of

Electrical Testing

This laboratory is accredited in accordance with the recognized International Standard ISO/IEC 17025:2017 General requirements for the competence of testing and calibration laboratories. This accreditation demonstrates technical competence for a defined scope and the operation of a laboratory quality management system (refer to joint ISO-ILAC-IAF Communiqué dated April 2017).

Presented this 24th day of July 2018.

President and CEO
For the Accreditation Council
Certificate Number 3628.01
Valid to August 31, 2020

For the tests to which this accreditation applies, please refer to the laboratory's Electrical Scope of Accreditation.

1. INTRODUCTION

1.1. Scope

Measurement and determination of electromagnetic emissions (EMC) of radio frequency devices including intentional and/or unintentional radiators for compliance with the technical rules and regulations of the Federal Communications Commission and the Industry Canada Certification and Engineering Bureau.

1.2. MRT Test Location

The map below shows the location of the MRT LABORATORY, its proximity to the Taihu Lake. These measurement tests were conducted at the MRT Technology (Suzhou) Co., Ltd. Facility located at D8 Building, No.2 Tian'edang Rd., Wuzhong Economic Development Zone, Suzhou, China. The measurement facility compliant with the test site requirements specified in ANSI C63.4-2014.

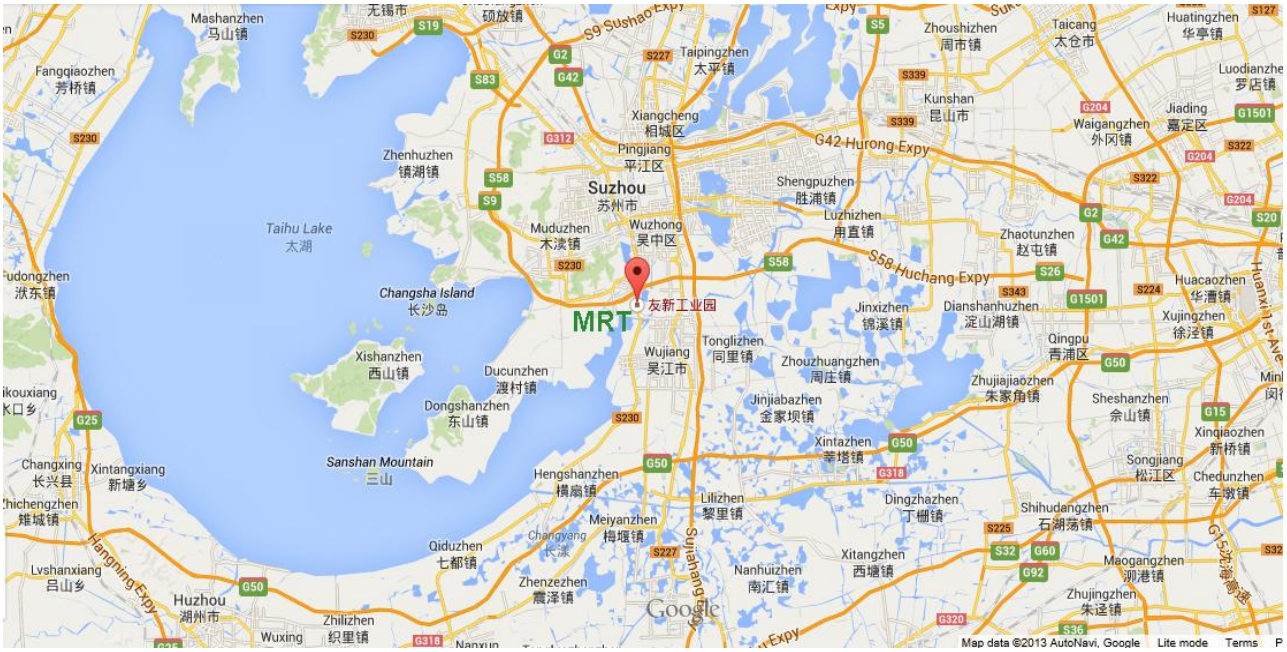

2. PRODUCT INFORMATION

2.1. Equipment Description

Product Name:	2.4GHz Radio Control System
Model No.:	F4
Serial Model No.:	S4
Brand Name:	FMS
Frequency Range:	2420 ~ 2459 MHz
Channel Number:	40
Channel Control:	Auto
Working Voltage:	4 AA Batteries
Date Rate:	250kbps
Type of Modulation:	GFSK
Antenna Gain:	2dBi

Note: The different models are only for marketing different clients, others are the same.

2.2. Operation Frequency and Channel List

Channel	Frequency	Channel	Frequency
01	2420 MHz	02	2421 MHz
03	2422 MHz	04	2423 MHz
05	2424 MHz	06	2425 MHz
07	2426 MHz	08	2427 MHz
09	2428 MHz	10	2429 MHz
11	2430 MHz	12	2431 MHz
13	2432 MHz	14	2433 MHz
15	2434 MHz	16	2435 MHz
17	2436 MHz	18	2437 MHz
19	2438 MHz	20	2439 MHz
21	2440 MHz	22	2441 MHz
23	2442 MHz	24	2443 MHz
25	2444 MHz	26	2445 MHz
27	2446 MHz	28	2447 MHz
29	2448 MHz	30	2449 MHz
31	2450 MHz	32	2451 MHz
33	2452 MHz	34	2453 MHz
35	2454 MHz	36	2455 MHz
37	2456 MHz	38	2457 MHz
39	2458 MHz	40	2459 MHz

Note: The engineer test sample was provided by the manufacturer, it was configured into fixed frequency T_X status after power on.

2.3. Test Configuration

The EUT was tested as described in this report is in compliance with the requirements limits of FCC Rules Part 15.207,15.209, 15.215 and 15.249. ANSI C63.10-2013 was used to reference the appropriate EUT setup for radiated spurious emissions testing and AC line conducted testing.

2.4. EMI Suppression Device(s)/Modifications

No EMI suppression device(s) were added and/or no modifications were made during testing.

2.5. Labeling Requirements

Per 2.1074 & 15.19; Docket 95-19

The label shall be permanently affixed at a conspicuous location on the device; instruction manual or pamphlet supplied to the user and be readily visible to the purchaser at the time of purchase. However, when the device is so small wherein placement of the label with specified statement is not practical, only the FCC ID must be displayed on the device per Section 15.19(a)(5). Please see attachment for FCC ID label and label location.

3. DESCRIPTION OF TEST

3.1. Evaluation Procedure

The measurement procedures described in the American National Standard for Testing Unlicensed Wireless Devices (ANSI C63.10-2013), and the requirements provided in FCC 15.207, 15.209, 15.215 and 15.249 were performed in the report of the EUT.

Deviation from measurement procedure…….....None

3.2. AC Line Conducted Emissions

The line-conducted facility is located inside an 8'x4'x4' shielded enclosure. A 1m x 2m wooden table 80cm high is placed 40cm away from the vertical wall and 80cm away from the sidewall of the shielded room. Two 10kHz-30MHz, 50Ω/50uH Line-Impedance Stabilization Networks (LISNs) are bonded to the shielded room floor. Power to the LISNs is filtered by external high-current high-insertion loss power line filters. These filters attenuate ambient signal noise from entering the measurement lines. These filters are also bonded to the shielded enclosure.

The EUT is powered from one LISN and the support equipment is powered from the second LISN. All interconnecting cables more than 1 meter were shortened to a 1 meter length by non-inductive bundling (serpentine fashion) and draped over the back edge of the test table. All cables were at least 40cm above the horizontal reference ground-plane. Power cables for support equipment were routed down to the second LISN while ensuring that that cables were not draped over the second LISN.

Sufficient time for the EUT, support equipment, and test equipment was allowed in order for them to warm up to their normal operating condition. The RF output of the LISN was connected to the receiver and exploratory measurements were made to determine the frequencies producing the maximum emission from the EUT. The receiver was scanned from 150 kHz to 30 MHz. The detector function was set to peak mode for exploratory measurements while the bandwidth of the analyzer was set to 9 kHz. The EUT, support equipment, and interconnecting cables were arranged and manipulated to maximize each emission. Each emission was also maximized by varying: power lines, the mode of operation or data exchange speed, or support equipment whichever determined the worst-case emission. Once the worst case emissions have been identified, the one EUT cable configuration/arrangement and mode of operation that produced these emissions are used for final measurements on the same test site. The analyzer is set to CISPR quasi-peak and average detectors with a 9 kHz resolution bandwidth for final measurements.

An extension cord was used to connect to a single LISN which powered by EUT. The extension cord was calibrated with LISN, the impedance and insertion loss are compliance with the requirements as stated in ANSI C63.10-2013.

3.3. Radiated Emissions

The radiated test facilities consisted of an indoor 3 meter semi-anechoic chamber used for final measurements and exploratory measurements, when necessary. The measurement area is contained within the semi-anechoic chamber which is shielded from any ambient interference. For measurements above 1GHz absorbers are arranged on the floor between the turn table and the antenna mast in such a way so as to maximize the reduction of reflections. For measurements below 1GHz, the absorbers are removed. A MF Model 210SS turntable is used for radiated measurement. It is a continuously rotatable, remote controlled, metallic turntable and 2 meters (6.56 ft.) in diameter. The turn table is flush with the raised floor of the chamber in order to maintain its function as a ground plane. An 80cm high PVC support structure is placed on top of the turntable.

For all measurements, the spectrum was scanned through all EUT azimuths and from 1 to 4 meter receive antenna height using a broadband antenna from 30MHz up to the upper frequency shown in 15.33(b)(1) depending on the highest frequency generated or used in the device or on which the device operates or tunes. For frequencies above 1GHz, linearly polarized double ridge horn antennas were used. For frequencies below 30MHz, a calibrated loop antenna was used. When exploratory measurements were necessary, they were performed at 1 meter test distance inside the semi-anechoic chamber using broadband antennas, broadband amplifiers, and spectrum analyzers to determine the frequencies and modes producing the maximum emissions. Sufficient time for the EUT, support equipment, and test equipment was allowed in order for them to warm up to their normal operating condition. The test set-up for frequencies below 1GHz was placed on top of the 0.8 meter high, 1 x 1.5 meter table; and test set-up for frequencies 1-25GHz was placed on top of the 1.5 meter high, 1 x 1.5 meter table. The EUT, support equipment, and interconnecting cables were arranged and manipulated to maximize each emission. Appropriate precaution was taken to ensure that all emissions from the EUT were maximized and investigated. The system configuration, clock speed, mode of operation or video resolution, if applicable, turntable azimuth, and receive antenna height was noted for each frequency found.

Final measurements were made in the semi-anechoic chamber using calibrated, linearly polarized broadband and horn antennas. The test setup was configured to the setup that produced the worst case emissions. The spectrum analyzer was set to investigate all frequencies required for testing to compare the highest radiated disturbances with respect to the specified limits. The turntable containing the EUT was rotated through 360 degrees and the height of the receive antenna was varied 1 to 4 meters and stopped at the azimuth and height producing the maximum emission. Each emission was maximized by changing the orientation of the EUT through three orthogonal planes and changing the polarity of the receive antenna, whichever produced the worst-case emissions. According to 3dB Beam-Width of horn antenna, the horn antenna should be always directed to the EUT when rising height.

4. ANTENNA REQUIREMENTS

Excerpt from §15.203 of the FCC Rules/Regulations:

"An intentional radiator antenna shall be designed to ensure that no antenna other than that furnished by the responsible party can be used with the device. The use of a permanently attached antenna or of an antenna that uses a unique coupling to the intentional radiator shall be considered sufficient to comply with the provisions of this section."

Conclusion:

This unit complies with the requirement of §15.203.

5. TEST EQUIPMENT CALIBRATION DATE

Conducted Emissions - SR2

Instrument	Manufacturer	Type No.	Asset No.	Cali. Interval	Cali. Due Date
EMI Test Receiver	R&S	ESR3	MRTSUE06185	1 year	2020/04/15
Two-Line V-Network	R&S	ENV 216	MRTSUE06002	1 year	2020/06/13
Two-Line V-Network	R&S	ENV 216	MRTSUE06003	1 year	2020/06/13
Thermohygrometer	Testo	608-H1	MRTSUE06404	1 year	2020/08/08
Shielding Room	MIX-BEP	Chamber-SR2	MRTSUE06215	N/A	N/A

Radiated Emissions - AC1

Instrument	Manufacturer	Type No.	Asset No.	Cali. Interval	Cali. Due Date
EMI Test Receiver	R&S	ESR7	MRTSUE06001	1 year	2020/08/01
PXA Signal Analyzer	Keysight	9030B	MRTSUE06395	1 year	2019/09/25
Loop Antenna	Schwarzbeck	FMZB 1519	MRTSUE06025	1 year	2019/11/09
Bilog Period Antenna	Schwarzbeck	VULB 9168	MRTSUE06172	1 year	2020/03/31
Broad Band Horn Antenna	Schwarzbeck	BBHA 9120D	MRTSUE06023	1 year	2019/10/19
Broad Band Horn Antenna	Schwarzbeck	BBHA 9170	MRTSUE06024	1 year	2019/12/17
Microwave System Amplifier	Agilent	83017A	MRTSUE06076	1 year	2019/11/16
Preamplifier	Schwarzbeck	BBV 9721	MRTSUE06121	1 year	2020/06/11
Thermohygrometer	Testo	608-H1	MRTSUE06403	1 year	2020/08/08
Anechoic Chamber	TDK	Chamber-AC1	MRTSUE06212	1 year	2020/04/30

Radiated Emission - AC2

Instrument	Manufacturer	Type No.	Asset No.	Cali. Interval	Cali. Due Date
Spectrum Analyzer	Keysight	N9038A	MRTSUE06125	1 year	2020/08/01
Loop Antenna	Schwarzbeck	FMZB 1519	MRTSUE06025	1 year	2019/11/09
Bilog Period Antenna	Schwarzbeck	VULB 9162	MRTSUE06022	1 year	2019/10/19
Horn Antenna	Schwarzbeck	BBHA9120D	MRTSUE06171	1 year	2019/11/09
Broad Band Horn Antenna	Schwarzbeck	BBHA 9170	MRTSUE06024	1 year	2019/12/17
Broadband Coaxial Preamplifier	Schwarzbeck	BBV 9718	MRTSUE06176	1 year	2019/11/16
Preamplifier	Schwarzbeck	BBV 9721	MRTSUE06121	1 year	2020/06/11
Temperature/Humidity Meter	Minggao	ETH529	MRTSUE06170	1 year	2019/12/13
Anechoic Chamber	RIKEN	Chamber-AC2	MRTSUE06213	1 year	2020/04/30

Conducted Test Equipment - TR3

Instrument	Manufacturer	Type No.	Asset No.	Cali. Interval	Cali. Due Date
EXA Signal Analyzer	Agilent	N9020A	MRTSUE06106	1 year	2020/04/15
EXA Signal Analyzer	Keysight	N9010B	MRTSUE06452	1 year	2020/07/11
Signal Analyzer	R&S	FSV40	MRTSUE06218	1 year	2020/04/15
Power Meter	Agilent	U2021XA	MRTSUE06030	1 year	2019/11/16
USB wideband power sensor	Keysight	U2021XA	MRTSUE06446	1 year	2020/06/30
USB wideband power sensor	Keysight	U2021XA	MRTSUE06447	1 year	2020/06/30
Bluetooth Test Set	Anritsu	MT8852B-042	MRTSUE06389	1 year	2020/06/13
Audio Analyzer	Agilent	U8903B	MRTSUE06143	1 year	2020/06/13
Modulation Analyzer	HP	8901A	MRTSUE06098	1 year	2019/10/18
Wideband Radio Communication Tester	R&S	CMW 500	MRTSUE06243	1 year	2019/11/16
DC Power Supply	GWINSTEK	DPS-3303C	MRTSUE06064	N/A	N/A
Temperature & Humidity Chamber	BAOYT	BYH-150CL	MRTSUE06051	1 year	2019/11/16
Thermohygrometer	testo	608-H1	MRTSUE06401	1 year	2020/08/08

Software	Version	Function
e3	V8.3.5	EMI Test Software

6. MEASUREMENT UNCERTAINTY

Where relevant, the following test uncertainty levels have been estimated for tests performed on the EUT as specified in CISPR 16-4-2. This uncertainty represents an expanded uncertainty expressed at approximately the 95% confidence level using a coverage factor of k = 2.

AC Conducted Emission Measurement - SR2
Measuring Uncertainty for a Level of Confidence of 95% (U=2Uc(y)): 150kHz~30MHz: 3.46dB
Radiated Emission Measurement - AC1
Measuring Uncertainty for a Level of Confidence of 95% (U=2Uc(y)): Horizontal: 30MHz~300MHz: 4.07dB 300MHz~1GHz: 3.63dB 1GHz~18GHz: 4.16dB Vertical: 30MHz~300MHz: 4.18dB 300MHz~1GHz: 3.60dB 1GHz~18GHz: 4.76dB
Radiated Emission Measurement - AC2
Measuring Uncertainty for a Level of Confidence of 95% (U=2Uc(y)): Horizontal: 30MHz~300MHz: 3.75dB 300MHz~1GHz: 3.53dB 1GHz~18GHz: 4.28dB Vertical: 30MHz~300MHz: 3.86dB 300MHz~1GHz: 3.53dB 1GHz~18GHz: 4.33dB

7. TEST RESULT

7.1. Summary

FCC Part Section(s)	Test Description	Test Limit	Test Condition	Test Result	Reference
15.207	AC Conducted Emissions 150kHz - 30MHz	< FCC 15.207 limits	Line Conducted	N/A	Section 7.2
15.209 15.249	General Field Strength Limits (Restricted Bands and Radiated Emission Limits)	Emissions in restricted bands must meet the radiated limits detailed in 15.209	Radiated	Pass	Section 7.3 & 7.4
15.215(c)	20dB Spectrum Bandwidth	20 dB bandwidth of the emission in the specific band	Conducted	Pass	Section 7.5
N/A	99% Occupied Bandwidth	N/A		Pass	Section 7.6

Notes:

1. All modes of operation and data rates were investigated. For radiated emission test, every axis (X, Y, Z) was also verified. The test results shown in the following sections represent the worst case emissions.
2. The analyzer plots shown in this section were all taken with a correction table loaded into the analyzer. The correction table was used to account for the losses of the cables and attenuators used as part of the system to connect the EUT to the analyzer at all frequencies of interest.
3. “N/A” means that the test item is not applicable, and the details information refer to relevant section.

7.2. Conducted Emission

7.2.1.Test Limit

FCC Part 15.207 Limits		
Frequency (MHz)	QP (dBuV)	AV (dBuV)
0.15 ~ 0.50	66 ~ 56	56 ~ 46
0.50 ~ 5.0	56	46
5.0 ~ 30	60	50
Note 1: The lower limit shall apply at the transition frequencies. Note 2: The limit decreases linearly with the logarithm of the frequency in the range 0.15MHz to 0.5MHz.		

7.2.2.Test Setup

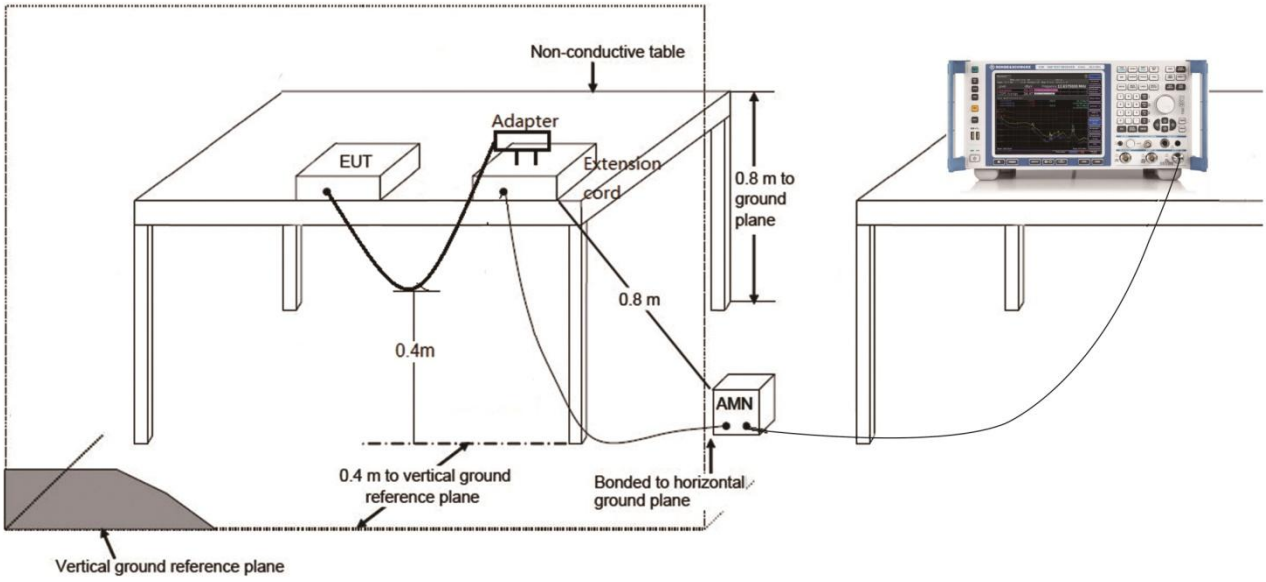

7.2.3.Test Result

The EUT is powered by batteries, so this requirement does not apply.

7.3. Radiated Emission

7.3.1.Test Limit

FCC Part 15 Subpart C Paragraph 15.249		
Fundamental Frequency (MHz)	Field Strength of Fundamental (mV/m)	Field Strength of Harmonics (uV/m)
902 ~ 908	50	500
2400 ~ 2483.5	50	500
5725 ~ 5875	50	500
24000 ~ 24250	250	2500
Note: FCC Part 15.249 (d), Emissions radiated outside of the specified frequency bands, except for harmonics, shall be attenuated by at least 50 dB below the level of the fundamental or to the general radiated emission limits in §15.209, whichever is the lesser attenuation.		

FCC Part 15 Subpart C Paragraph 15.209		
Frequency (MHz)	Field Strength (uV/m)	Measurement Distance (m)
0.009 ~ 0.490	2400/F(kHz)	300
0.490 ~ 1.705	24000/F(kHz)	30
1.705 ~ 30.0	30	30
30 ~ 88	100**	3
88 ~ 216	150**	3
216 ~ 960	200**	3
Above 960	500	3
Note 1: The lower limit shall apply at the transition frequency. Note 2: Distance refers to the distance in meters between the measuring instrument antenna and the closed point of any part of the device or system. Note 3: E field strength (dBuV/m) = 20 log E field strength (uV/m).		

7.3.2.Test Setup

30MHz ~ 1GHz Test Setup:

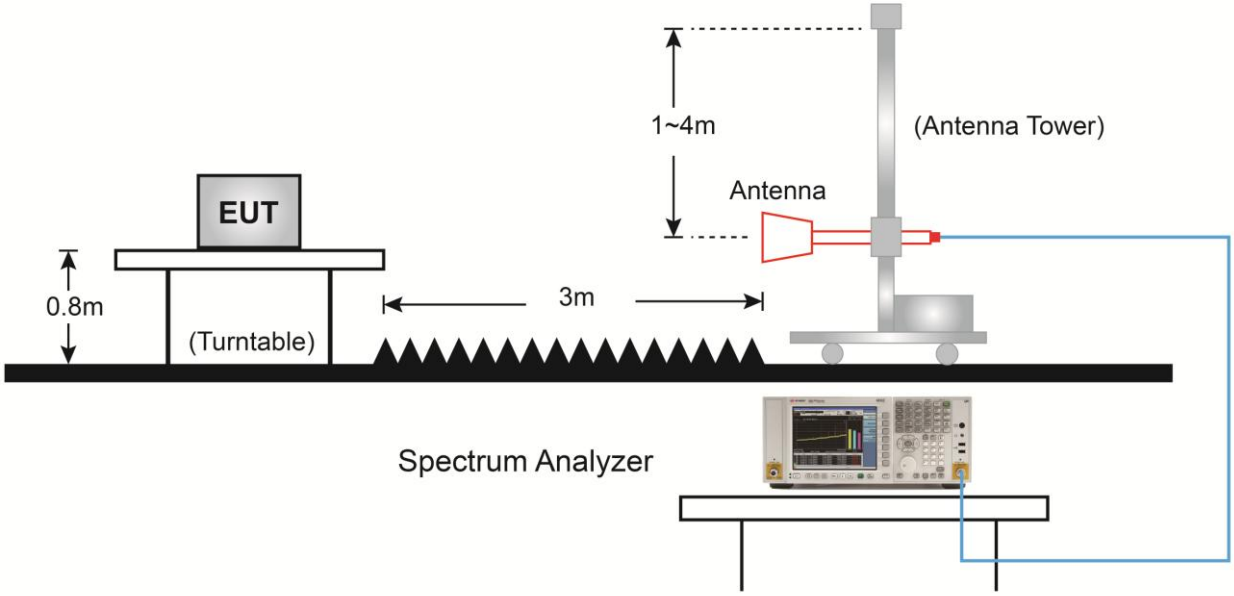

1GHz ~ 25GHz Test Setup:

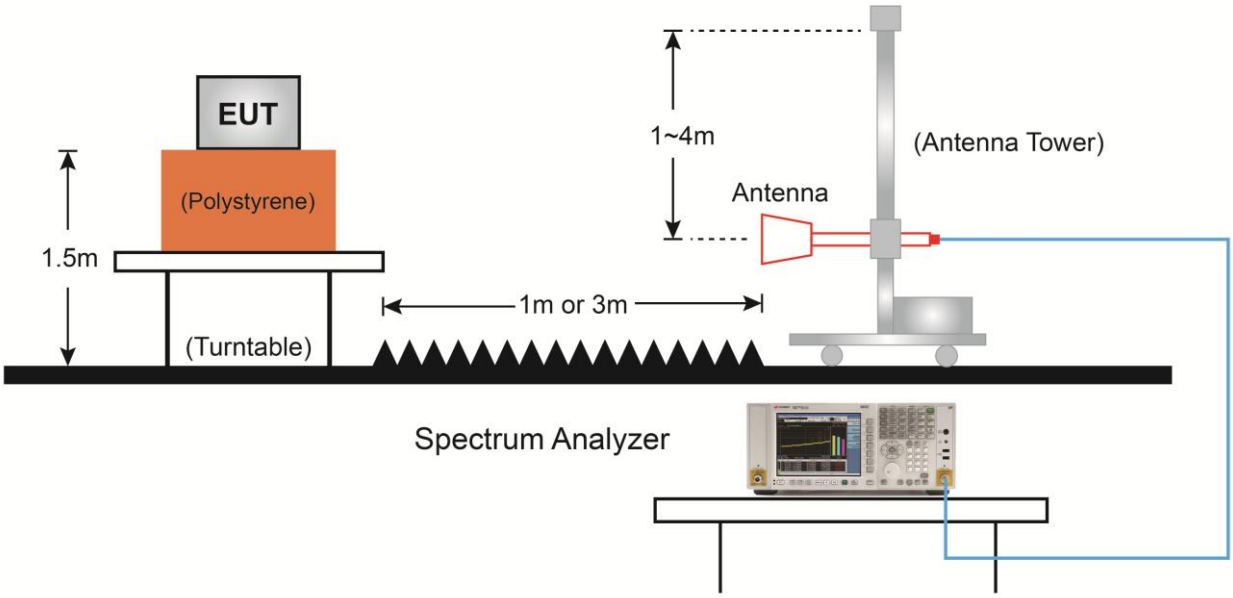

7.3.3.Test Result

Product	2.4GHz Radio Control System	Temperature	24°C
Test Engineer	Snake Ni	Relative Humidity	59%
Test Site	TR3	Test Date	2019/08/23

Time On (ms)	One Period (ms)	Duty Cycle (%)	Duty Cycle Factor (dB)
6.05	100	6.05	-24.4

Note: Duty Cycle Factor = 20*Log (Duty Cycle)

Time On = 6.05ms

Channel 2420MHz	
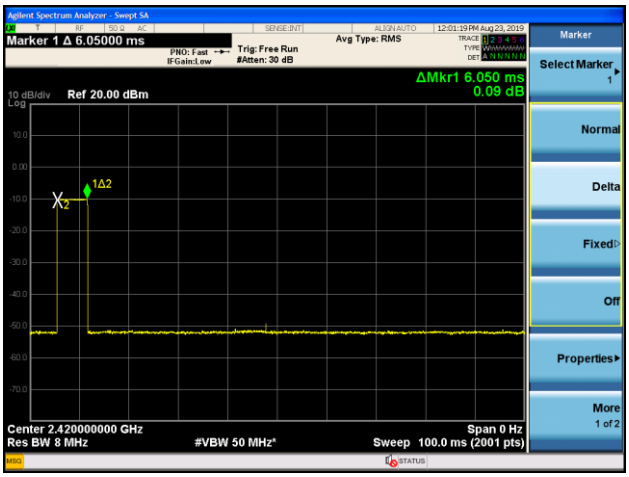	

Product	2.4GHz Radio Control System	Temperature	24°C
Test Engineer	Snake Ni	Relative Humidity	59%
Test Site	AC1	Test Date	2019/08/20
Remark	**Fundamental** Radiated Emission		

Frequency (MHz)	Reading Level (dBμV)	Factor (dB)	Duty Cycle Factor (dB)	Measure Level (dBμV/m)	Limit (dBμV/m)	Margin (dB)	Detector	Polarization
2420	75.5	32.4	N/A	107.9	114.0	-6.7	PK	Horizontal
	75.5	32.4	-24.4	83.5	94.0	-10.5	AV	Horizontal
	68.3	32.4	N/A	100.7	114.0	-13.3	PK	Vertical
	68.3	32.4	-24.4	76.3	94.0	-17.7	AV	Vertical
2442	74.9	32.3	N/A	107.2	114.0	-6.8	PK	Horizontal
	74.9	32.3	-24.4	82.8	94.0	-11.2	AV	Horizontal
	69.0	32.3	N/A	101.3	114.0	-12.7	PK	Vertical
	69.0	32.3	-24.4	76.9	94.0	-17.1	AV	Vertical
2459	77.4	32.4	N/A	109.8	114.0	-4.2	PK	Horizontal
	77.4	32.4	-24.4	85.4	94.0	-8.6	AV	Horizontal
	69.2	32.4	N/A	101.6	114.0	-12.4	PK	Vertical
	69.2	32.4	-24.4	77.2	94.0	-16.8	AV	Vertical

Note 1: Peak Measure Level (dBμV/m) = Reading Level (dBμV) + Factor (dB)

Average Measure Level = Peak Measure Level + Duty Cycle Factor

Factor (dB) = Cable Loss (dB) + Antenna Factor (dB/m)

Note 2: All readings below 1GHz are peak, above 1GHz are performed with peak and/or average measurements as necessary.

Product	2.4GHz Radio Control System	Temperature	24°C
Test Engineer	Snake Ni	Relative Humidity	59%
Test Site	AC1	Test Date	2019/08/20
Remark:	**Harmonics** Radiated Emission - 2420MHz		

Frequency (MHz)	Reading Level (dBμV)	Factor (dB)	Duty Cycle Factor (dB)	Measure Level (dBμV/m)	Limit (dBμV/m)	Margin (dB)	Detector	Polarization
303.1	18.4	14.6	N/A	33.0	46.0	-13.0	QP	Horizontal
702.2	11.4	22.5	N/A	33.8	46.0	-12.2	QP	Horizontal
546.0	10.6	19.8	N/A	30.4	46.0	-15.6	QP	Vertical
702.2	9.5	22.5	N/A	32.0	46.0	-14.0	QP	Vertical
4842.0	52.3	5.5	N/A	57.8	74.0 (Note 2)	-16.2	PK	Horizontal
4842.0	52.3	5.5	-24.4	33.4	54.0	-20.6	AV	Horizontal
6550.5	35.0	9.5	N/A	44.5	74.0 (Note 2)	-29.5	PK	Horizontal
7256.0	38.2	11.6	N/A	49.8	74.0 (Note 2)	-24.2	PK	Horizontal
8267.5	35.9	12.1	N/A	48.1	74.0 (Note 2)	-25.9	PK	Horizontal
4842.0	55.1	5.5	N/A	60.6	74.0 (Note 2)	-13.4	PK	Vertical
4842.0	55.1	5.5	-24.4	36.2	54.0	-17.8	AV	Vertical
5853.5	35.9	7.3	N/A	43.2	74.0 (Note 2)	-30.8	PK	Vertical
6584.5	34.8	9.7	N/A	44.5	74.0 (Note 2)	-29.5	PK	Vertical
7256.0	38.8	11.6	N/A	50.4	74.0 (Note 2)	-23.6	PK	Vertical

Note 1: Peak Measure Level (dBμV/m) = Reading Level (dBμV) + Factor (dB)

Average Measure Level = Peak Measure Level + Duty Cycle Factor

Factor (dB) = Cable Loss (dB) + Antenna Factor (dB/m) – Pre Amplifier Gain (dB)

Note 2: Average measurement was not performed when the peak level lower than average limit.

Note 3: The test trace is same as the ambient noise (the test frequency range: 9 kHz ~ 30 MHz and 18 GHz ~ 25 GHz), therefore no data appear in the report.

Product	2.4GHz Radio Control System	Temperature	24°C
Test Engineer	Snake Ni	Relative Humidity	59%
Test Site	AC1	Test Date	2019/06/11
Remark:	**Harmonics** Radiated Emission - 2442MHz		

Frequency (MHz)	Reading Level (dBμV)	Factor (dB)	Duty Cycle Factor (dB)	Measure Level (dBμV/m)	Limit (dBμV/m)	Margin (dB)	Detector	Polarization
311.8	18.0	14.9	N/A	32.9	46.0	-13.1	QP	Horizontal
702.2	11.4	22.5	N/A	33.8	46.0	-12.2	QP	Horizontal
546.0	10.3	19.8	N/A	30.1	46.0	-15.9	QP	Vertical
714.8	8.0	22.6	N/A	30.7	46.0	-15.3	QP	Vertical
4884.5	53.7	5.7	N/A	59.3	74.0 (Note 2)	-17.4	PK	Horizontal
4884.5	53.7	5.7	-24.4	34.9	54.0	-19.1	AV	Horizontal
6270.0	35.6	8.4	N/A	44.0	74.0 (Note 2)	-30.0	PK	Horizontal
6873.5	35.7	10.0	N/A	45.7	74.0 (Note 2)	-28.3	PK	Horizontal
7324.0	38.2	11.7	N/A	49.9	74.0 (Note 2)	-24.1	PK	Horizontal
4884.5	55.9	5.7	N/A	61.6	74.0 (Note 2)	-12.4	PK	Vertical
4884.5	55.9	5.7	-24.4	37.2	54.0	-16.8	AV	Vertical
5811.0	35.4	7.1	N/A	42.5	74.0 (Note 2)	-31.5	PK	Vertical
6661.0	35.6	9.6	N/A	45.2	74.0 (Note 2)	-28.8	PK	Vertical
7324.0	38.9	11.7	N/A	50.5	74.0 (Note 2)	-23.5	PK	Vertical

Note 1: Measure Level (dBμV/m) = Reading Level (dBμV) + Factor (dB)

Average Measure Level = Peak Measure Level + Duty Cycle Factor

Factor (dB) = Cable Loss (dB) + Antenna Factor (dB/m) – Pre Amplifier Gain (dB)

Note 2: Average measurement was not performed when the peak level lower than average limit.

Note 3: The test trace is same as the ambient noise (the test frequency range: 9 kHz ~ 30 MHz and 18 GHz ~ 25 GHz), therefore no data appear in the report.

Product	2.4GHz Radio Control System	Temperature	24°C
Test Engineer	Snake Ni	Relative Humidity	59%
Test Site	AC1	Test Date	2019/08/20
Remark:	**Harmonics** Radiated Emission - 2459MHz		

Frequency (MHz)	Reading Level (dBμV)	Factor (dB)	Duty Cycle Factor (dB)	Measure Level (dBμV/m)	Limit (dBμV/m)	Margin (dB)	Detector	Polarization
311.8	18.3	14.9	N/A	33.2	46.0	-12.8	QP	Horizontal
714.8	10.3	22.6	N/A	32.9	46.0	-13.1	QP	Horizontal
546.0	10.4	19.8	N/A	30.2	46.0	-15.8	QP	Vertical
676.0	9.1	22.1	N/A	31.3	46.0	-14.7	QP	Vertical
4918.5	54.3	5.8	N/A	60.1	74.0 (Note 2)	-13.9	PK	Horizontal
4918.5	54.3	5.8	-24.4	35.7	54.0	-18.3	AV	Horizontal
5182.0	36.8	6.6	N/A	43.4	74.0 (Note 2)	-30.6	PK	Horizontal
6627.0	36.1	9.5	N/A	45.7	74.0 (Note 2)	-28.3	PK	Horizontal
7375.0	40.0	11.7	N/A	51.7	74.0 (Note 2)	-22.3	PK	Horizontal
4918.5	54.7	5.8	N/A	60.5	74.0 (Note 2)	-13.5	PK	Vertical
4918.5	54.7	5.8	-24.4	36.1	54.0	-17.9	AV	Vertical
6525.0	34.9	9.6	N/A	44.6	74.0 (Note 2)	-29.4	PK	Vertical
7375.0	38.6	11.7	N/A	50.3	74.0 (Note 2)	-23.7	PK	Vertical
8131.5	35.1	12.6	N/A	47.7	74.0 (Note 2)	-26.3	PK	Vertical

Note 1: Measure Level (dBμV/m) = Reading Level (dBμV) + Factor (dB)

Average Measure Level = Peak Measure Level + Duty Cycle Factor

Factor (dB) = Cable Loss (dB) + Antenna Factor (dB/m) – Pre Amplifier Gain (dB)

Note 2: Average measurement was not performed when the peak level lower than average limit.

Note 3: The test trace is same as the ambient noise (the test frequency range: 9 kHz ~ 30 MHz and 18 GHz ~ 25 GHz), therefore no data appear in the report.

7.4. Radiated Restricted Band Edge Measurement

7.4.1.Test Limit

For 15.205 requirement:

Radiated emissions which fall in the restricted bands, as defined in Section 15.205(a) of FCC part 15, must also comply with the radiated emission limits specified in Section 15.209(a).

Frequency (MHz)	Frequency (MHz)	Frequency (MHz)	Frequency (GHz)
0.090 - 0.110	16.42 - 16.423	399.9 - 410	4.5 - 5.15
[1] 0.495 - 0.505	16.69475 - 16.69525	608 - 614	5.35 - 5.46
2.1735 - 2.1905	16.80425 - 16.80475	960 - 1240	7.25 - 7.75
4.125 - 4.128	25.5 - 25.67	1300 - 1427	8.025 - 8.5
4.17725 - 4.17775	37.5 - 38.25	1435 - 1626.5	9.0 - 9.2
4.20725 - 4.20775	73 - 74.6	1645.5 - 1646.5	9.3 - 9.5
6.215 - 6.218	74.8 - 75.2	1660 - 1710	10.6 - 12.7
6.26775 - 6.26825	108 - 121.94	1718.8 - 1722.2	13.25 - 13.4
6.31175 - 6.31225	123 - 138	2200 - 2300	14.47 - 14.5
8.291 - 8.294	149.9 - 150.05	2310 – 2390	15.35 - 16.2
8.362 - 8.366	156.52475 - 156.52525	2483.5 - 2500	17.7 - 21.4
8.37625 - 8.38675	156.7 - 156.9	2690 - 2900	22.01 - 23.12
8.41425 - 8.41475	162.0125 - 167.17	3260 - 3267	23.6 - 24.0
12.29 - 12.293	167.72 - 173.2	3332 - 3339	31.2 - 31.8
12.51975 - 12.52025	240 - 285	3345.8 - 3358	36.43 - 36.5
12.57675 - 12.57725	322 - 335.4	3600 - 4400	([2])
13.36 - 13.41	--	--	--

All out of band emissions appearing in a restricted band as specified in Section 15.205 of the Title 47 CFR must not exceed the limits shown in Table per Section 15.209.

FCC Part 15 Subpart C Paragraph 15.209		
Frequency [MHz]	Field Strength [uV/m]	Measured Distance [Meter]
0.009 ~ 0.490	2400/F (kHz)	300
0.490 ~ 1.705	24000/F (kHz)	30
1.705 ~ 30	30	30
30 ~ 88	100	3
88 ~ 216	150	3
216 ~ 960	200	3
Above 960	500	3

7.4.2.Test Setup

1GHz ~ 18GHz Test Setup:

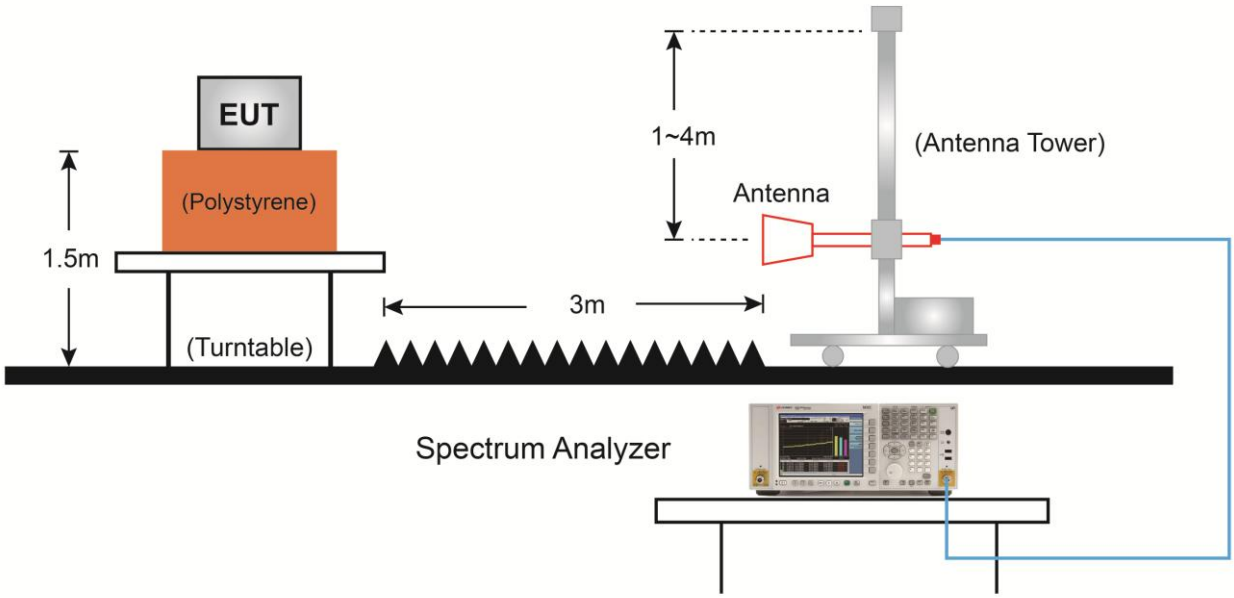

7.4.3.Test Result

Site: AC1	Time: 2019/08/25 - 11:53
Limit: FCC_Part15_Band Edge(3m)	Engineer: Cloud Guo
Probe: BBHA9120D_1-18GHz	Polarity: Horizontal
EUT: 2.4GHz Radio Control System	Power: By Battery
Test Mode: Transmit at Channel 2420MHz	

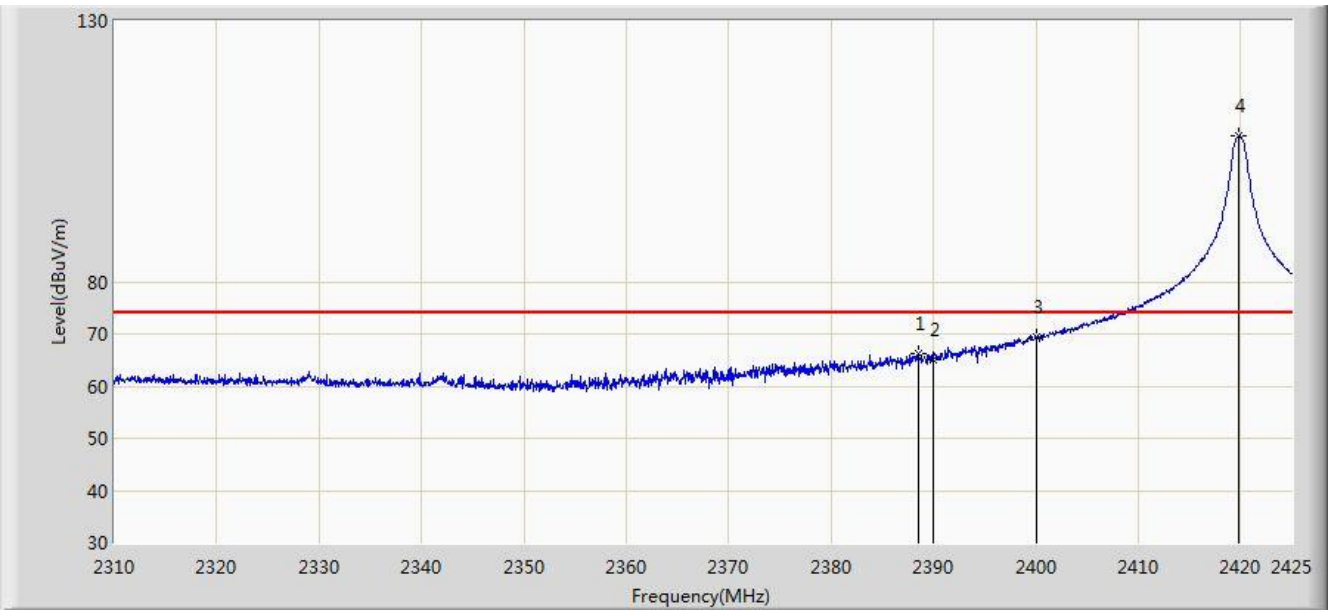

No	Flag	Mark	Frequency (MHz)	Reading Level (dBuV)	Factor (dB)	Duty Cycle Factor (dB)	Measure Level (dBuV/m)	Limit (dBuV/m)	Margin (dB)	Type
1			2388.603	33.896	32.415	N/A	66.311	74.000	-7.689	PK
			2388.603	33.896	32.415	-24.4	41.911	54.000	-12.089	AV
2			2390.000	32.673	32.413	N/A	65.086	74.000	-8.914	PK
			2390.000	32.673	32.413	-24.4	40.686	54.000	-13.314	AV
3			2400.000	36.912	32.399	N/A	69.310	74.000	-4.690	PK
			2400.000	34.153	32.399	-24.4	44.910	54.000	-9.090	AV
4		*	2419.825	75.487	32.375	N/A	107.862	N/A	N/A	PK

Note: Peak Measure Level (dBμV/m) = Reading Level (dBμV) + Factor (dB)

Average Measure Level = Peak Measure Level + Duty Cycle Factor

Factor (dB) = Cable Loss (dB) + Antenna Factor (dB/m)

Site: AC1	Time: 2019/08/25 - 12:02
Limit: FCC_Part15_Band Edge(3m)	Engineer: Cloud Guo
Probe: BBHA9120D_1-18GHz	Polarity: Vertical
EUT: 2.4GHz Radio Control System	Power: By Battery
Test Mode: Transmit at Channel 2420MHz	

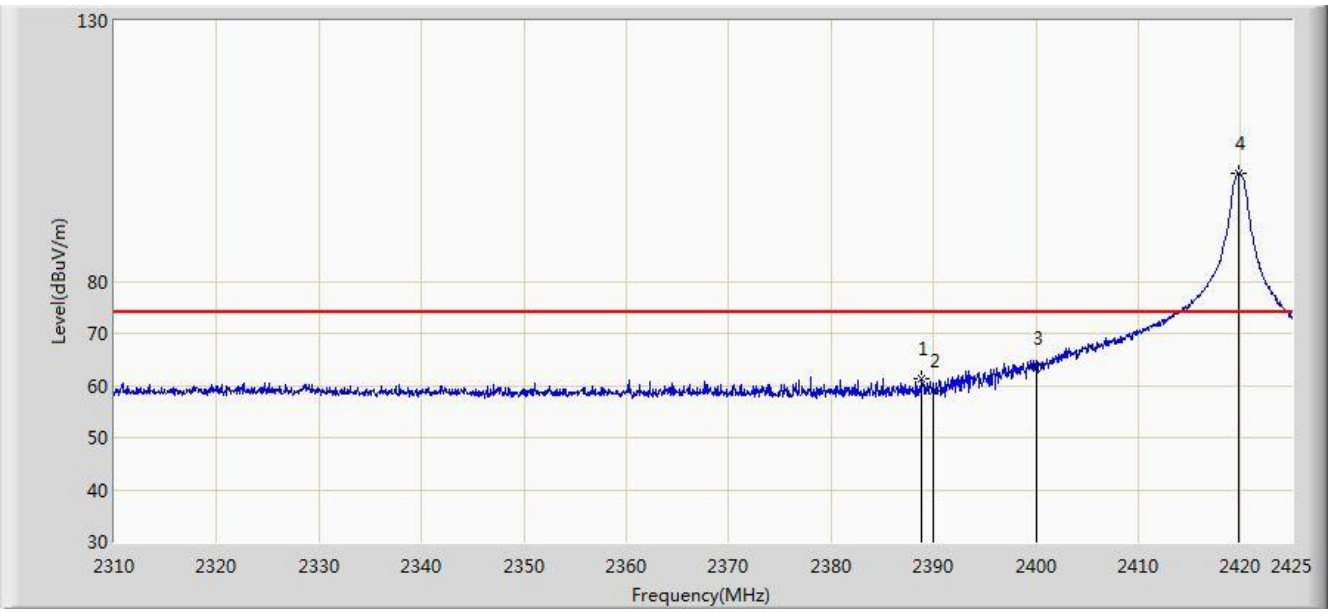

No	Flag	Mark	Frequency (MHz)	Reading Level (dBuV)	Factor (dB)	Duty Cycle Factor (dB)	Measure Level (dBuV/m)	Limit (dBuV/m)	Margin (dB)	Type
1			2388.775	28.828	32.415	N/A	61.243	74.000	-12.757	PK
			2388.775	28.828	32.415	-24.4	36.843	54.000	-17.157	AV
2			2390.000	26.618	32.413	N/A	59.031	74.000	-14.969	PK
			2390.000	26.618	32.413	-24.4	34.631	54.000	-19.369	AV
3			2400.000	30.831	32.399	N/A	63.229	74.000	-10.771	PK
			2400.000	30.831	32.399	-24.4	38.829	54.000	-15.171	AV
4		*	2419.768	68.277	32.375	N/A	100.652	N/A	N/A	PK

Note: Peak Measure Level (dBμV/m) = Reading Level (dBμV) + Factor (dB)

Average Measure Level = Peak Measure Level + Duty Cycle Factor

Factor (dB) = Cable Loss (dB) + Antenna Factor (dB/m)

Site: AC1	Time: 2019/08/25 - 12:05
Limit: FCC_Part15_Band Edge(3m)	Engineer: Cloud Guo
Probe: BBHA9120D_1-18GHz	Polarity: Horizontal
EUT: 2.4GHz Radio Control System	Power: By Battery
Test Mode: Transmit at Channel 2459MHz	

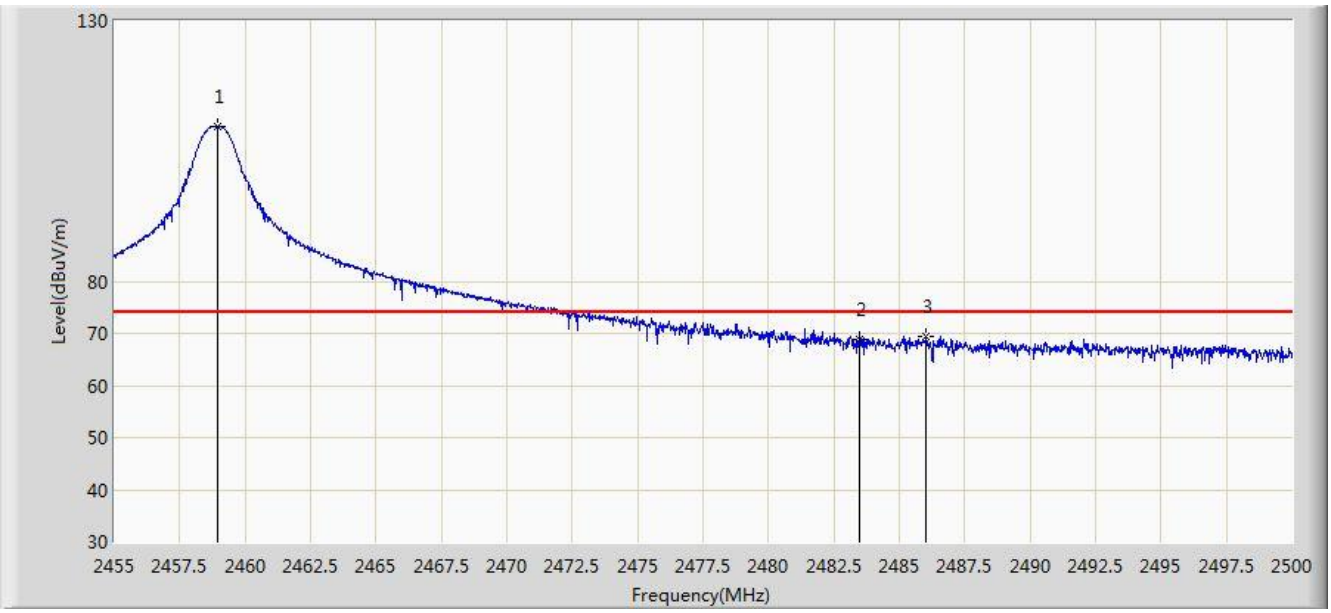

No	Flag	Mark	Frequency (MHz)	Reading Level (dBuV)	Factor (dB)	Duty Cycle Factor (dB)	Measure Level (dBuV/m)	Limit (dBuV/m)	Margin (dB)	Type
1		*	2458.960	77.365	32.361	N/A	109.726	N/A	N/A	PK
2			2483.500	36.470	32.416	N/A	68.885	74.000	-5.115	PK
			2483.500	36.470	32.416	-24.4	44.485	54.000	-9.515	AV
3			2486.028	36.984	32.420	N/A	69.404	74.000	-4.596	PK
			2486.028	36.984	32.420	-24.4	45.004	54.000	-8.996	AV

Note: Peak Measure Level (dBμV/m) = Reading Level (dBμV) + Factor (dB)

Average Measure Level = Peak Measure Level + Duty Cycle Factor

Factor (dB) = Cable Loss (dB) + Antenna Factor (dB/m)

Site: AC1	Time: 2019/08/25 - 12:07
Limit: FCC_Part15_Band Edge(3m)	Engineer: Cloud Guo
Probe: BBHA9120D_1-18GHz	Polarity: Vertical
EUT: 2.4GHz Radio Control System	Power: By Battery
Test Mode: Transmit at Channel 2459MHz	

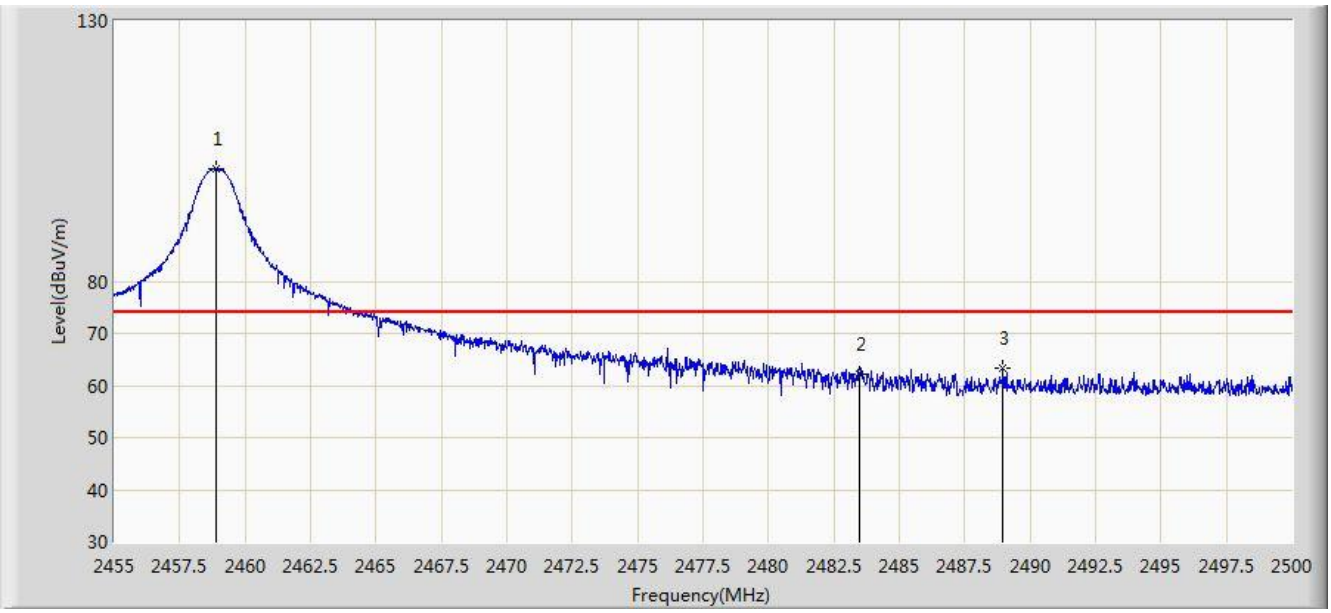

No	Flag	Mark	Frequency (MHz)	Reading Level (dBuV)	Factor (dB)	Duty Cycle Factor (dB)	Measure Level (dBuV/m)	Limit (dBuV/m)	Margin (dB)	Type
1		*	2458.870	69.154	32.361	N/A	101.514	N/A	N/A	PK
2			2483.500	29.721	32.416	N/A	62.136	74.000	-11.864	PK
			2483.500	29.721	32.416	-24.4	37.736	54.000	-16.264	AV
3			2488.952	30.782	32.426	N/A	63.208	74.000	-10.792	PK
			2488.952	30.782	32.426	-24.4	38.808	54.000	-15.192	AV

Note: Peak Measure Level (dBμV/m) = Reading Level (dBμV) + Factor (dB)

Average Measure Level = Peak Measure Level + Duty Cycle Factor

Factor (dB) = Cable Loss (dB) + Antenna Factor (dB/m)

7.5. 20dB Spectrum Bandwidth Measurement

7.5.1.Test Limit

Intentional radiators must be designed to ensure that the 20 dB bandwidth of the emission in the specific band.

7.5.2.Test Procedure used

ANSI C63.10 Clause 6.9.2

7.5.3.Test Setting

1. Set the spectrum span range to overlap the nominal center frequency
2. Set RBW = 100 kHz
3. VBW ≥ 3 × RBW
4. Detector = Peak
5. Trace mode = max hold
6. Sweep = auto couple
7. Allow the trace was allowed to stabilize and marker the highest level
8. Determine the display level (the highest level - 20dB) and place two markers, one at the lowest frequency and the other at the highest frequency

7.5.4.Test Setup

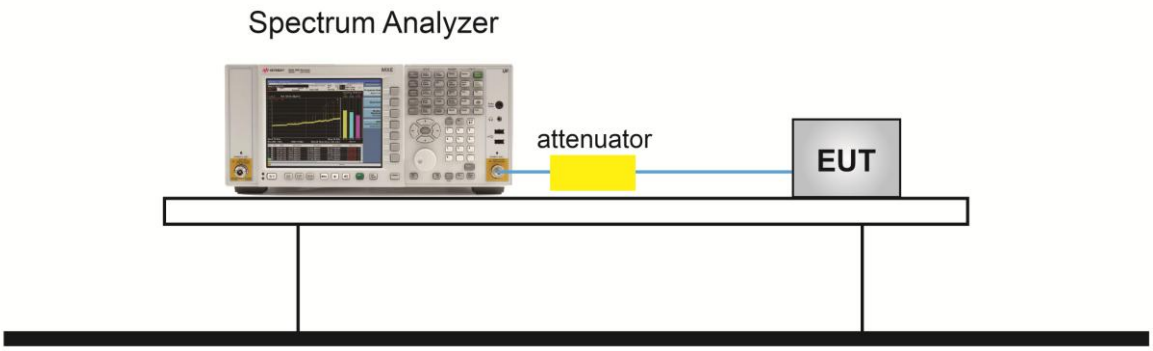

7.5.5.Test Result

Product	2.4GHz Radio Control System	Temperature	24°C
Test Engineer	Snake Ni	Relative Humidity	59%
Test Site	TR3	Test Date	2019/08/20

Frequency (MHz)	Frequency Range (MHz)	Frequency Range (MHz)	Result
2420	2419.63	--	Pass
2459	--	2459.19	Pass

20dB Spectrum Bandwidth Measurement	
2420MHz	2459 MHz
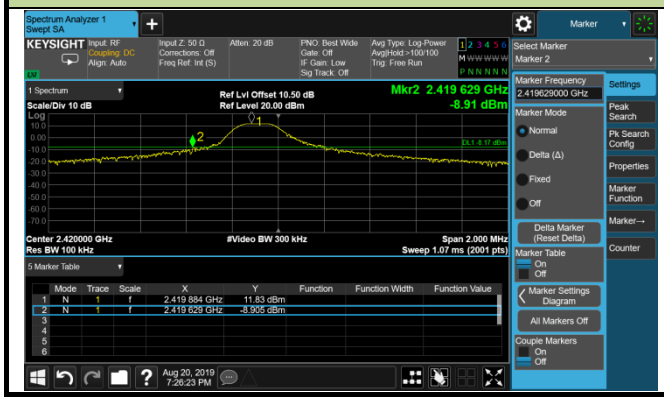	

8. CONCLUSION

The data collected relate only the item(s) tested and show that unit is in compliance with Part 15C of the FCC Rules.

The End

Appendix A - Test Setup Photograph

Refer to “1907RSU017-UT” file.

Appendix B - EUT Photograph

Refer to “1907RSU017-UE” file.