EAZYRC PATRION

INSTRUCTION MANUAL

Function

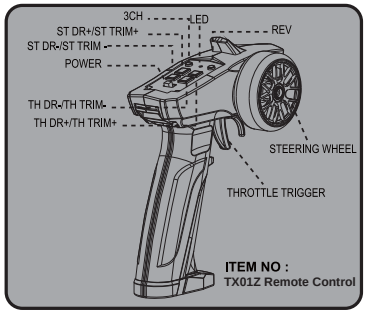

A.Throttle Trigger

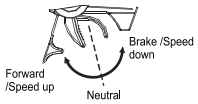

B. Steering Wheel

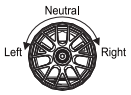

1. Push the trigger forward to slow down or brake.
2. Pull the trigger backward to accelerate.

Install the Batteries

(1) Remove the battery compartment cover.
(2) Replace the used batteries with new AAA size batteries.

Please replace batteries when the power indicator blinks or the buzzer beeps.

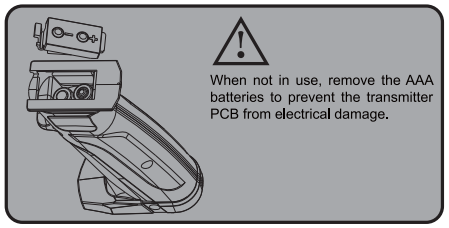

When not in use, remove the AAA batteries to prevent the transmitter PCB from electrical damage.

Keep the transmitter and receiver 40cm apart when operating.

Throttle trim: If the vehicle inches forward or backwards without throttle input, adjust the trim to set the neutral throttle position.
Steering trim: If the vehicle veers left or right without any steering input, use the steering trim to adjust the steering servo until the vehicle tracks straight.

Operating procedure

Always turn the transmitter on before turning on the vehicle.
Always disconnect the vehicle BEFORE turning off the transmitter.

This device complies with part 15 of the FCC Rules. Operation is subject to the condition that this device does not cause harmful interference (1) this device may not cause harmful interference, and (2) this device must accept any interference received, including interference that may cause undesired operation.
Any changes or modifications not expressly approved by the party responsible for compliancecould void the user's authority to operate the equipment.
NOTE: This equipment has been tested and found to comply with the limits for a Class B digital device, pursuant to Part 15 of the FCC Rules. These limits are designed to provide reasonable protection against harmful interference in a residential installation. This equipment generates, uses and can radiate radio frequency energy and, if not installed and used in accordance with the instructions, may cause harmful interference to radio communications. However, there is no guarantee that interference will not occur in a particular installation.
If this equipment does cause harmful interference to radio or television reception,
which can be determined by turning the equipment off and on, the user is encouraged to try to correct the interference by one or more of the following measures:
-- Reorient or relocate the receiving antenna.
-- Increase the separation between the equipment and receiver.
-- Connect the equipment into an outlet on a circuit different
from that to which the receiver is connected.
-- Consult the dealer or an experienced radio/TV technician for help.

The device has been evaluated to meet general RF exposure requirements. The device can be used in portable exposure conditions without restriction.
FCC ID: 2AUBX –TX01Z

CAUTION:
This product is intended for ages 14+ users under 18 years of age require parental supervision.

This product is strictly forbidden to be used in water, please do not drive on water stains.

Introduction

Thank you for purchasing the EAZYRC 1/18th Patriot.Engineered to be one of the most realistic,capable and dependable trucks in its class, the EAZYRC 1/18th series is ready to tackle any terrain right out of the box.

This manual is written to assist you in properly operating, maintaining and repairing the vehicle.As many of the components used are unique to this truck,please retain this manual as a future reference.

Composed of precision-made components, the EAZYRC 1/18th Patriot is not a toy, thus it is not suited for children under 14 years of age.Minors should be accompanied by an adult when operating.

It is the owner's responsibility to operate this product in a safe manner.EAZYRC and its distributors are not responsible in any way for any and all bodily harm and or property damage that may result from the use of this product.

Warnings

• This vehicle is not intended for those under 14 years of age without proper adult supervision. It is not a toy! Failure to operate or maintain this vehicle in a safe manner can result in bodily harm.

• Replace damaged components with original factory-parts. Pay special attention to the polarity of all vehicle wiring.

• This product is strictly forbidden to be used in water, please do not drive on water stains.

• Only use approved 2 cell lithium polymer batteries. Do not over-charge or over dis-charge the battery as doing so may cause the battery to become a fire hazard. If the battery should become hot during charging, discontinue charging immediately and disconnect the battery from the charger. Never leave the battery unattended while charging. If you are unsure of how to charge this battery, please seek the advice of experienced RC users. Never let children charge the battery without adult supervision.

• The motor will become hot during use. Allow 10-15 minutes between runs for the vehicle to cool down. Doing so will prolong the life of your vehicle.

• Use common sense when selecting the environment to operate your vehicle. Do not operate near power cables, cellular/radio towers, deep water or unstable terrain. The operator is solely responsible for their actions.

• The product is composed of precision electrical components. It is critical to keep the product away from moisture and other contaminants. If exposed to a humid environment, make sure the electronics are fully dried prior to using them again.

• Always check the radio range of the vehicle prior to operation in order to prevent radio loss or interference.

• Operate this product within your ability. If the vehicle is dangerous to retrieve, it's never worth the risk.

• Always turn on the transmitter before connecting the battery on the model. When turning off the model, always disconnect the battery first, and then turn off the model, always disconnect the battery first, and then turn off the transmitter. If this order is reversed, the model may become uncontrollable and cause serious damage.

• Never allow transmitter batteries to run low as it may cause loss of vehicle control.

• Plastics on the vehicle are susceptible to damage or deformation due to extreme heat and cold climate. Do not store the model near any source of heat such as oven or heater. Store the model indoors, in a climate-controlled, room temperature environment.

• Never shorten the receiver antenna; this may affect the transmitting range of the radio system.

Setting the Gear Mesh

The gear mesh is the clearance between the pinion and spur gears in your vehicle. If the motor or gearing components are replaced,check that the gears are not meshing too tightly as this may cause premature wear.

Charging the Battery

1.Connect the charger to a USB port then connect the battery to the charger.
2.When charging,the Green LED is flash, when charged, the Green LED is stable.
3.Do not let the battery charge unattended!
4. If the battery or charger is hot,disconnect the battery and charger immediately as this may be caused by an internal short-circuit.

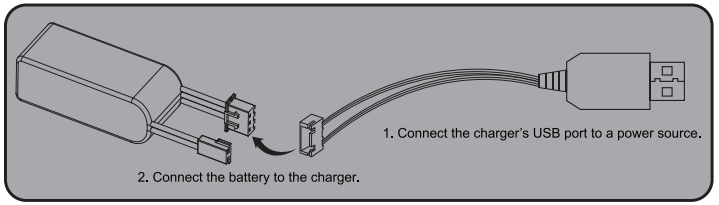

Lithium Polymer (LiPo) Battery Warning

- Never charge a lithium polymer battery with a charger designed for Nicd， NIMH, or any other type of battery chemistry.Use ONLY charger designed for LiPo battery.
- Do not leave LiPo battery unattended during charging.
- Do not overcharge the battery.
- Always charge LiPo batteries on non-flammable, heat-resistant surfaces.
- Always use a LiPo-safe bag or container while charging. Do not allow LiPo cells to overheat at any time.Cells which reach greater than 140 Fahrenheit(60°C) will usually become damaged and will catch fire.
- Do not charge the LiPo pack while it is still in the model. Never charge or store battery packs in a vehicle.
- Do not discharge LiPo; doing so will damage the battery.
- Do not expose LiPo cell to water or moisture at any time.
- Do not store battery near open flame or heater.
- Do not assemble LiPo cells or pre-assembled packs together with other LiPo cells or packs.
- Always store LiPo battery in a secure location away from children.
- Always remove the LiPo battery if model is involved in any kind of crash.
- Carefully inspect the battery and connectors for even the smallest damage.
- CAUTION:Cells may become hot after usage.Allow the pack to cool to room temperature prior to recharging.
- Do not allow the electrolyte to get into eyes or on skin.Wash affected areas immediately if they if they come into contact with electrolyte.Do not alter or modifv connectors or wires of a LiPo battery pack.
- Always inspect the condition of the battery before charging and operating.
- Do not short circuit the LiPo battery.
- Do not have contact with a leaky/damaged battery directly.
- Do not charge battery out of recommended temperature range(O°C-45°C).

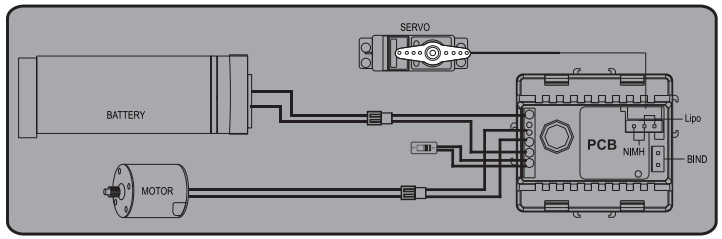

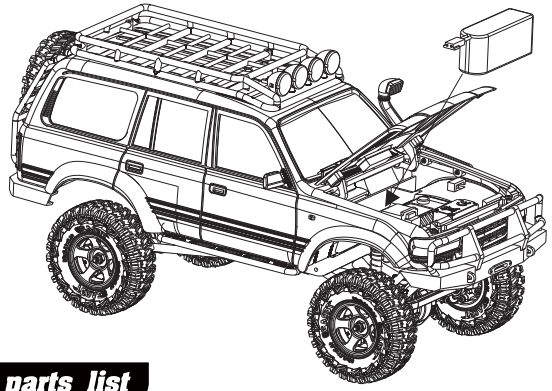

Spare parts list

Transmitter COMBO Part No:WRC0001	7.4V 380mAh LIPO Battery Part No:WRC0002	USB Charger Part No:WRC0003
Shock absorption Set Part No:WRC0004	Transmission Gear Box & Axle Set Part No:WRC0005	Wheel Set Part No:WRC0006