UID	Rev	Communication System Name	Group	PAR (dB)	Unc[E] k = 2
10829	AAF	5G NR (CP-OFDM, 100% RB, 100 MHz, QPSK, 30 kHz)	5G NR FR1 TDD	8.40	±9.6
10830	AAE	5G NR (CP-OFDM, 1 RB, 10 MHz, QPSK, 60 kHz)	5G NR FR1 TDD	7.63	±9.6
10831	AAD	5G NR (CP-OFDM, 1 RB, 15 MHz, QPSK, 60 kHz)	5G NR FR1 TDD	7.73	±9.6
10832	AAE	5G NR (CP-OFDM, 1 RB, 20 MHz, QPSK, 60 kHz)	5G NR FR1 TDD	7.74	±9.6
10833	AAD	5G NR (CP-OFDM, 1 RB, 25 MHz, QPSK, 60 kHz)	5G NR FR1 TDD	7.70	±9.6
10834	AAE	5G NR (CP-OFDM, 1 RB, 30 MHz, QPSK, 60 kHz)	5G NR FR1 TDD	7.75	±9.6
10835	AAF	5G NR (CP-OFDM, 1 RB, 40 MHz, QPSK, 60 kHz)	5G NR FR1 TDD	7.70	±9.6
10836	AAE	5G NR (CP-OFDM, 1 RB, 50 MHz, QPSK, 60 kHz)	5G NR FR1 TDD	7.66	±9.6
10837	AAF	5G NR (CP-OFDM, 1 RB, 60 MHz, QPSK, 60 kHz)	5G NR FR1 TDD	7.68	±9.6
10839	AAF	5G NR (CP-OFDM, 1 RB, 80 MHz, QPSK, 60 kHz)	5G NR FR1 TDD	7.70	±9.6
10840	AAE	5G NR (CP-OFDM, 1 RB, 90 MHz, QPSK, 60 kHz)	5G NR FR1 TDD	7.67	±9.6
10841	AAF	5G NR (CP-OFDM, 1 RB, 100 MHz, QPSK, 60 kHz)	5G NR FR1 TDD	7.71	±9.6
10843	AAD	5G NR (CP-OFDM, 50% RB, 15 MHz, QPSK, 60 kHz)	5G NR FR1 TDD	8.49	±9.6
10844	AAE	5G NR (CP-OFDM, 50% RB, 20 MHz, QPSK, 60 kHz)	5G NR FR1 TDD	8.34	±9.6
10846	AAE	5G NR (CP-OFDM, 50% RB, 30 MHz, QPSK, 60 kHz)	5G NR FR1 TDD	8.41	±9.6
10854	AAE	5G NR (CP-OFDM, 100% RB, 10 MHz, QPSK, 60 kHz)	5G NR FR1 TDD	8.34	±9.6
10855	AAD	5G NR (CP-OFDM, 100% RB, 15 MHz, QPSK, 60 kHz)	5G NR FR1 TDD	8.36	±9.6
10856	AAE	5G NR (CP-OFDM, 100% RB, 20 MHz, QPSK, 60 kHz)	5G NR FR1 TDD	8.37	±9.6
10857	AAD	5G NR (CP-OFDM, 100% RB, 25 MHz, QPSK, 60 kHz)	5G NR FR1 TDD	8.35	±9.6
10858	AAE	5G NR (CP-OFDM, 100% RB, 30 MHz, QPSK, 60 kHz)	5G NR FR1 TDD	8.36	±9.6
10859	AAF	5G NR (CP-OFDM, 100% RB, 40 MHz, QPSK, 60 kHz)	5G NR FR1 TDD	8.34	±9.6
10860	AAE	5G NR (CP-OFDM, 100% RB, 50 MHz, QPSK, 60 kHz)	5G NR FR1 TDD	8.41	±9.6
10861	AAF	5G NR (CP-OFDM, 100% RB, 60 MHz, QPSK, 60 kHz)	5G NR FR1 TDD	8.40	±9.6
10863	AAF	5G NR (CP-OFDM, 100% RB, 80 MHz, QPSK, 60 kHz)	5G NR FR1 TDD	8.41	±9.6
10864	AAE	5G NR (CP-OFDM, 100% RB, 90 MHz, QPSK, 60 kHz)	5G NR FR1 TDD	8.37	±9.6
10865	AAF	5G NR (CP-OFDM, 100% RB, 100 MHz, QPSK, 60 kHz)	5G NR FR1 TDD	8.41	±9.6
10866	AAF	5G NR (DFT-s-OFDM, 1 RB, 100 MHz, QPSK, 30 kHz)	5G NR FR1 TDD	5.68	±9.6
10868	AAF	5G NR (DFT-s-OFDM, 100% RB, 100 MHz, QPSK, 30 kHz)	5G NR FR1 TDD	5.89	±9.6
10869	AAE	5G NR (DFT-s-OFDM, 1 RB, 100 MHz, QPSK, 120 kHz)	5G NR FR2 TDD	5.75	±9.6
10870	AAE	5G NR (DFT-s-OFDM, 100% RB, 100 MHz, QPSK, 120 kHz)	5G NR FR2 TDD	5.86	±9.6
10871	AAE	5G NR (DFT-s-OFDM, 1 RB, 100 MHz, 16QAM, 120 kHz)	5G NR FR2 TDD	5.75	±9.6
10872	AAE	5G NR (DFT-s-OFDM, 100% RB, 100 MHz, 16QAM, 120 kHz)	5G NR FR2 TDD	6.52	±9.6
10873	AAE	5G NR (DFT-s-OFDM, 1 RB, 100 MHz, 64QAM, 120 kHz)	5G NR FR2 TDD	6.61	±9.6
10874	AAE	5G NR (DFT-s-OFDM, 100% RB, 100 MHz, 64QAM, 120 kHz)	5G NR FR2 TDD	6.65	±9.6
10875	AAE	5G NR (CP-OFDM, 1 RB, 100 MHz, QPSK, 120 kHz)	5G NR FR2 TDD	7.78	±9.6
10876	AAE	5G NR (CP-OFDM, 100% RB, 100 MHz, QPSK, 120 kHz)	5G NR FR2 TDD	8.39	±9.6
10877	AAE	5G NR (CP-OFDM, 1 RB, 100 MHz, 16QAM, 120 kHz)	5G NR FR2 TDD	7.95	±9.6
10878	AAE	5G NR (CP-OFDM, 100% RB, 100 MHz, 16QAM, 120 kHz)	5G NR FR2 TDD	8.41	±9.6
10879	AAE	5G NR (CP-OFDM, 1 RB, 100 MHz, 64QAM, 120 kHz)	5G NR FR2 TDD	8.12	±9.6
10880	AAE	5G NR (CP-OFDM, 100% RB, 100 MHz, 64QAM, 120 kHz)	5G NR FR2 TDD	8.38	±9.6
10881	AAE	5G NR (DFT-s-OFDM, 1 RB, 50 MHz, QPSK, 120 kHz)	5G NR FR2 TDD	5.75	±9.6
10882	AAE	5G NR (DFT-s-OFDM, 100% RB, 50 MHz, QPSK, 120 kHz)	5G NR FR2 TDD	5.96	±9.6
10883	AAE	5G NR (DFT-s-OFDM, 1 RB, 50 MHz, 16QAM, 120 kHz)	5G NR FR2 TDD	6.57	±9.6
10884	AAE	5G NR (DFT-s-OFDM, 100% RB, 50 MHz, 16QAM, 120 kHz)	5G NR FR2 TDD	6.53	±9.6
10885	AAE	5G NR (DFT-s-OFDM, 1 RB, 50 MHz, 64QAM, 120 kHz)	5G NR FR2 TDD	6.61	±9.6
10886	AAE	5G NR (DFT-s-OFDM, 100% RB, 50 MHz, 64QAM, 120 kHz)	5G NR FR2 TDD	6.65	±9.6
10887	AAE	5G NR (CP-OFDM, 1 RB, 50 MHz, QPSK, 120 kHz)	5G NR FR2 TDD	7.78	±9.6
10888	AAE	5G NR (CP-OFDM, 100% RB, 50 MHz, QPSK, 120 kHz)	5G NR FR2 TDD	8.35	±9.6
10889	AAE	5G NR (CP-OFDM, 1 RB, 50 MHz, 16QAM, 120 kHz)	5G NR FR2 TDD	8.02	±9.6
10890	AAE	5G NR (CP-OFDM, 100% RB, 50 MHz, 16QAM, 120 kHz)	5G NR FR2 TDD	8.40	±9.6
10891	AAE	5G NR (CP-OFDM, 1 RB, 50 MHz, 64QAM, 120 kHz)	5G NR FR2 TDD	8.13	±9.6
10892	AAF	5G NR (CP-OFDM, 100% RB, 50 MHz, 64QAM, 120 kHz)	5G NR FR2 TDD	8.41	±9.6
10897	AAE	5G NR (DFT-s-OFDM, 1 RB, 5 MHz, QPSK, 30 kHz)	5G NR FR1 TDD	5.66	±9.6
10898	AAC	5G NR (DFT-s-OFDM, 1 RB, 10 MHz, QPSK, 30 kHz)	5G NR FR1 TDD	5.67	±9.6
10899	AAB	5G NR (DFT-s-OFDM, 1 RB, 15 MHz, QPSK, 30 kHz)	5G NR FR1 TDD	5.67	±9.6
10900	AAC	5G NR (DFT-s-OFDM, 1 RB, 20 MHz, QPSK, 30 kHz)	5G NR FR1 TDD	5.68	±9.6
10901	AAB	5G NR (DFT-s-OFDM, 1 RB, 25 MHz, QPSK, 30 kHz)	5G NR FR1 TDD	5.68	±9.6
10902	AAC	5G NR (DFT-s-OFDM, 1 RB, 30 MHz, QPSK, 30 kHz)	5G NR FR1 TDD	5.68	±9.6
10903	AAD	5G NR (DFT-s-OFDM, 1 RB, 40 MHz, QPSK, 30 kHz)	5G NR FR1 TDD	5.68	±9.6
10904	AAC	5G NR (DFT-s-OFDM, 1 RB, 50 MHz, QPSK, 30 kHz)	5G NR FR1 TDD	5.68	±9.6
10905	AAD	5G NR (DFT-s-OFDM, 1 RB, 60 MHz, QPSK, 30 kHz)	5G NR FR1 TDD	5.68	±9.6
10906	AAD	5G NR (DFT-s-OFDM, 1 RB, 80 MHz, QPSK, 30 kHz)	5G NR FR1 TDD	5.68	±9.6
10907	AAE	5G NR (DFT-s-OFDM, 50% RB, 5 MHz, QPSK, 30 kHz)	5G NR FR1 TDD	5.78	±9.6
10908	AAC	5G NR (DFT-s-OFDM, 50% RB, 10 MHz, QPSK, 30 kHz)	5G NR FR1 TDD	5.93	±9.6
10909	AAB	5G NR (DFT-s-OFDM, 50% RB, 15 MHz, QPSK, 30 kHz)	5G NR FR1 TDD	5.96	±9.6
10910	AAC	5G NR (DFT-s-OFDM, 50% RB, 20 MHz, QPSK, 30 kHz)	5G NR FR1 TDD	5.83	±9.6

EX3DV4 - SN:7893 September 05, 2024

UID	Rev	Communication System Name	Group	PAR (dB)	Unc^E $k = 2$
10911	AAB	5G NR (DFT-s-OFDM, 50% RB, 25 MHz, QPSK, 30 kHz)	5G NR FR1 TDD	5.93	±9.6
10912	AAC	5G NR (DFT-s-OFDM, 50% RB, 30 MHz, QPSK, 30 kHz)	5G NR FR1 TDD	5.84	±9.6
10913	AAD	5G NR (DFT-s-OFDM, 50% RB, 40 MHz, QPSK, 30 kHz)	5G NR FR1 TDD	5.84	±9.6
10914	AAC	5G NR (DFT-s-OFDM, 50% RB, 50 MHz, QPSK, 30 kHz)	5G NR FR1 TDD	5.85	±9.6
10915	AAD	5G NR (DFT-s-OFDM, 50% RB, 60 MHz, QPSK, 30 kHz)	5G NR FR1 TDD	5.83	±9.6
10916	AAD	5G NR (DFT-s-OFDM, 50% RB, 80 MHz, QPSK, 30 kHz)	5G NR FR1 TDD	5.87	±9.6
10917	AAD	5G NR (DFT-s-OFDM, 50% RB, 100 MHz, QPSK, 30 kHz)	5G NR FR1 TDD	5.84	±9.6
10918	AAE	5G NR (DFT-s-OFDM, 100% RB, 5 MHz, QPSK, 30 kHz)	5G NR FR1 TDD	5.86	±9.6
10919	AAC	5G NR (DFT-s-OFDM, 100% RB, 10 MHz, QPSK, 30 kHz)	5G NR FR1 TDD	5.86	±9.6
10920	AAB	5G NR (DFT-s-OFDM, 100% RB, 15 MHz, QPSK, 30 kHz)	5G NR FR1 TDD	5.87	±9.6
10921	AAC	5G NR (DFT-s-OFDM, 100% RB, 20 MHz, QPSK, 30 kHz)	5G NR FR1 TDD	5.84	±9.6
10922	AAB	5G NR (DFT-s-OFDM, 100% RB, 25 MHz, QPSK, 30 kHz)	5G NR FR1 TDD	5.82	±9.6
10923	AAC	5G NR (DFT-s-OFDM, 100% RB, 30 MHz, QPSK, 30 kHz)	5G NR FR1 TDD	5.84	±9.6
10924	AAD	5G NR (DFT-s-OFDM, 100% RB, 40 MHz, QPSK, 30 kHz)	5G NR FR1 TDD	5.84	±9.6
10925	AAC	5G NR (DFT-s-OFDM, 100% RB, 50 MHz, QPSK, 30 kHz)	5G NR FR1 TDD	5.95	±9.6
10926	AAD	5G NR (DFT-s-OFDM, 100% RB, 60 MHz, QPSK, 30 kHz)	5G NR FR1 TDD	5.84	±9.6
10927	AAD	5G NR (DFT-s-OFDM, 100% RB, 80 MHz, QPSK, 30 kHz)	5G NR FR1 TDD	5.94	±9.6
10928	AAD	5G NR (DFT-s-OFDM, 1 RB, 5 MHz, QPSK, 15 kHz)	5G NR FR1 FDD	5.52	±9.6
10929	AAD	5G NR (DFT-s-OFDM, 1 RB, 10 MHz, QPSK, 15 kHz)	5G NR FR1 FDD	5.52	±9.6
10930	AAC	5G NR (DFT-s-OFDM, 1 RB, 15 MHz, QPSK, 15 kHz)	5G NR FR1 FDD	5.52	±9.6
10931	AAC	5G NR (DFT-s-OFDM, 1 RB, 20 MHz, QPSK, 15 kHz)	5G NR FR1 FDD	5.51	±9.6
10932	AAC	5G NR (DFT-s-OFDM, 1 RB, 25 MHz, QPSK, 15 kHz)	5G NR FR1 FDD	5.51	±9.6
10933	AAC	5G NR (DFT-s-OFDM, 1 RB, 30 MHz, QPSK, 15 kHz)	5G NR FR1 FDD	5.51	±9.6
10934	AAC	5G NR (DFT-s-OFDM, 1 RB, 40 MHz, QPSK, 15 kHz)	5G NR FR1 FDD	5.51	±9.6
10935	AAD	5G NR (DFT-s-OFDM, 1 RB, 50 MHz, QPSK, 15 kHz)	5G NR FR1 FDD	5.51	±9.6
10936	AAD	5G NR (DFT-s-OFDM, 50% RB, 5 MHz, QPSK, 15 kHz)	5G NR FR1 FDD	5.90	±9.6
10937	AAD	5G NR (DFT-s-OFDM, 50% RB, 10 MHz, QPSK, 15 kHz)	5G NR FR1 FDD	5.77	±9.6
10938	AAC	5G NR (DFT-s-OFDM, 50% RB, 15 MHz, QPSK, 15 kHz)	5G NR FR1 FDD	5.90	±9.6
10939	AAC	5G NR (DFT-s-OFDM, 50% RB, 20 MHz, QPSK, 15 kHz)	5G NR FR1 FDD	5.82	±9.6
10940	AAC	5G NR (DFT-s-OFDM, 50% RB, 25 MHz, QPSK, 15 kHz)	5G NR FR1 FDD	5.89	±9.6
10941	AAC	5G NR (DFT-s-OFDM, 50% RB, 30 MHz, QPSK, 15 kHz)	5G NR FR1 FDD	5.83	±9.6
10942	AAC	5G NR (DFT-s-OFDM, 50% RB, 40 MHz, QPSK, 15 kHz)	5G NR FR1 FDD	5.85	±9.6
10943	AAD	5G NR (DFT-s-OFDM, 50% RB, 50 MHz, QPSK, 15 kHz)	5G NR FR1 FDD	5.95	±9.6
10944	AAD	5G NR (DFT-s-OFDM, 100% RB, 5 MHz, QPSK, 15 kHz)	5G NR FR1 FDD	5.81	±9.6
10945	AAD	5G NR (DFT-s-OFDM, 100% RB, 10 MHz, QPSK, 15 kHz)	5G NR FR1 FDD	5.85	±9.6
10946	AAC	5G NR (DFT-s-OFDM, 100% RB, 15 MHz, QPSK, 15 kHz)	5G NR FR1 FDD	5.83	±9.6
10947	AAC	5G NR (DFT-s-OFDM, 100% RB, 20 MHz, QPSK, 15 kHz)	5G NR FR1 FDD	5.87	±9.6
10948	AAC	5G NR (DFT-s-OFDM, 100% RB, 25 MHz, QPSK, 15 kHz)	5G NR FR1 FDD	5.94	±9.6
10949	AAC	5G NR (DFT-s-OFDM, 100% RB, 30 MHz, QPSK, 15 kHz)	5G NR FR1 FDD	5.87	±9.6
10950	AAC	5G NR (DFT-s-OFDM, 100% RB, 40 MHz, QPSK, 15 kHz)	5G NR FR1 FDD	5.94	±9.6
10951	AAD	5G NR (DFT-s-OFDM, 100% RB, 50 MHz, QPSK, 15 kHz)	5G NR FR1 FDD	5.92	±9.6
10952	AAA	5G NR DL (CP-OFDM, TM 3.1, 5 MHz, 64-QAM, 15 kHz)	5G NR FR1 FDD	8.25	±9.6
10953	AAA	5G NR DL (CP-OFDM, TM 3.1, 10 MHz, 64-QAM, 15 kHz)	5G NR FR1 FDD	8.15	±9.6
10954	AAA	5G NR DL (CP-OFDM, TM 3.1, 15 MHz, 64-QAM, 15 kHz)	5G NR FR1 FDD	8.23	±9.6
10955	AAA	5G NR DL (CP-OFDM, TM 3.1, 20 MHz, 64-QAM, 15 kHz)	5G NR FR1 FDD	8.42	±9.6
10956	AAA	5G NR DL (CP-OFDM, TM 3.1, 5 MHz, 64-QAM, 30 kHz)	5G NR FR1 FDD	8.14	±9.6
10957	AAA	5G NR DL (CP-OFDM, TM 3.1, 10 MHz, 64-QAM, 30 kHz)	5G NR FR1 FDD	8.31	±9.6
10958	AAA	5G NR DL (CP-OFDM, TM 3.1, 15 MHz, 64-QAM, 30 kHz)	5G NR FR1 FDD	8.61	±9.6
10959	AAA	5G NR DL (CP-OFDM, TM 3.1, 20 MHz, 64-QAM, 30 kHz)	5G NR FR1 FDD	8.33	±9.6
10960	AAE	5G NR DL (CP-OFDM, TM 3.1, 5 MHz, 64-QAM, 15 kHz)	5G NR FR1 TDD	9.32	±9.6
10961	AAC	5G NR DL (CP-OFDM, TM 3.1, 10 MHz, 64-QAM, 15 kHz)	5G NR FR1 TDD	9.36	±9.6
10962	AAB	5G NR DL (CP-OFDM, TM 3.1, 15 MHz, 64-QAM, 15 kHz)	5G NR FR1 TDD	9.40	±9.6
10963	AAC	5G NR DL (CP-OFDM, TM 3.1, 20 MHz, 64-QAM, 15 kHz)	5G NR FR1 TDD	9.55	±9.6
10964	AAE	5G NR DL (CP-OFDM, TM 3.1, 5 MHz, 64-QAM, 30 kHz)	5G NR FR1 TDD	9.29	±9.6
10965	AAC	5G NR DL (CP-OFDM, TM 3.1, 10 MHz, 64-QAM, 30 kHz)	5G NR FR1 TDD	9.37	±9.6
10966	AAB	5G NR DL (CP-OFDM, TM 3.1, 15 MHz, 64-QAM, 30 kHz)	5G NR FR1 TDD	9.55	±9.6
10967	AAC	5G NR DL (CP-OFDM, TM 3.1, 20 MHz, 64-QAM, 30 kHz)	5G NR FR1 TDD	9.42	±9.6
10968	AAD	5G NR DL (CP-OFDM, TM 3.1, 100 MHz, 64-QAM, 30 kHz)	5G NR FR1 TDD	9.49	±9.6
10972	AAC	5G NR (CP-OFDM, 1 RB, 20 MHz, QPSK, 15 kHz)	5G NR FR1 TDD	11.59	±9.6
10973	AAD	5G NR (DFT-s-OFDM, 1 RB, 100 MHz, QPSK, 30 kHz)	5G NR FR1 TDD	9.06	±9.6
10974	AAD	5G NR (CP-OFDM, 100% RB, 100 MHz, 256-QAM, 30 kHz)	5G NR FR1 TDD	10.28	±9.6
10978	AAA	ULLA BDR	ULLA	1.16	±9.6
10979	AAA	ULLA HDR4	ULLA	8.58	±9.6
10980	AAA	ULLA HDR8	ULLA	10.32	±9.6
10981	AAA	ULLA HDRp4	ULLA	3.19	±9.6
10982	AAA	ULLA HDRp8	ULLA	3.43	±9.6

Certificate No: EX-7893_Sep24 Page 21 of 22

UID	Rev	Communication System Name	Group	PAR (dB)	Unc[E] k = 2
10983	AAC	5G NR DL (CP-OFDM, TM 3.1, 40 MHz, 64-QAM, 15 kHz)	5G NR FR1 TDD	9.31	±9.6
10984	AAB	5G NR DL (CP-OFDM, TM 3.1, 50 MHz, 64-QAM, 15 kHz)	5G NR FR1 TDD	9.42	±9.6
10985	AAC	5G NR DL (CP-OFDM, TM 3.1, 40 MHz, 64-QAM, 30 kHz)	5G NR FR1 TDD	9.54	±9.6
10986	AAB	5G NR DL (CP-OFDM, TM 3.1, 50 MHz, 64-QAM, 30 kHz)	5G NR FR1 TDD	9.50	±9.6
10987	AAC	5G NR DL (CP-OFDM, TM 3.1, 60 MHz, 64-QAM, 30 kHz)	5G NR FR1 TDD	9.53	±9.6
10988	AAB	5G NR DL (CP-OFDM, TM 3.1, 70 MHz, 64-QAM, 30 kHz)	5G NR FR1 TDD	9.38	±9.6
10989	AAC	5G NR DL (CP-OFDM, TM 3.1, 80 MHz, 64-QAM, 30 kHz)	5G NR FR1 TDD	9.33	±9.6
10990	AAB	5G NR DL (CP-OFDM, TM 3.1, 90 MHz, 64-QAM, 30 kHz)	5G NR FR1 TDD	9.52	±9.6
11003	AAA	5G NR DL (CP-OFDM, TM 3.1, 30 MHz, 64-QAM, 15 kHz)	5G NR FR1 TDD	10.24	±9.6
11004	AAA	5G NR DL (CP-OFDM, TM 3.1, 30 MHz, 64-QAM, 30 kHz)	5G NR FR1 TDD	10.73	±9.6
11005	AAA	5G NR DL (CP-OFDM, TM 3.1, 25 MHz, 64-QAM, 15 kHz)	5G NR FR1 FDD	8.70	±9.6
11006	AAA	5G NR DL (CP-OFDM, TM 3.1, 30 MHz, 64-QAM, 15 kHz)	5G NR FR1 FDD	8.55	±9.6
11007	AAA	5G NR DL (CP-OFDM, TM 3.1, 40 MHz, 64-QAM, 15 kHz)	5G NR FR1 FDD	8.46	±9.6
11008	AAA	5G NR DL (CP-OFDM, TM 3.1, 50 MHz, 64-QAM, 15 kHz)	5G NR FR1 FDD	8.51	±9.6
11009	AAA	5G NR DL (CP-OFDM, TM 3.1, 25 MHz, 64-QAM, 30 kHz)	5G NR FR1 FDD	8.76	±9.6
11010	AAA	5G NR DL (CP-OFDM, TM 3.1, 30 MHz, 64-QAM, 30 kHz)	5G NR FR1 FDD	8.95	±9.6
11011	AAA	5G NR DL (CP-OFDM, TM 3.1, 40 MHz, 64-QAM, 30 kHz)	5G NR FR1 FDD	8.96	±9.6
11012	AAA	5G NR DL (CP-OFDM, TM 3.1, 50 MHz, 64-QAM, 30 kHz)	5G NR FR1 FDD	8.68	±9.6
11013	AAB	IEEE 802.11be (320 MHz, MCS1, 99pc duty cycle)	WLAN	8.47	±9.6
11014	AAB	IEEE 802.11be (320 MHz, MCS2, 99pc duty cycle)	WLAN	8.45	±9.6
11015	AAB	IEEE 802.11be (320 MHz, MCS3, 99pc duty cycle)	WLAN	8.44	±9.6
11016	AAB	IEEE 802.11be (320 MHz, MCS4, 99pc duty cycle)	WLAN	8.44	±9.6
11017	AAB	IEEE 802.11be (320 MHz, MCS5, 99pc duty cycle)	WLAN	8.41	±9.6
11018	AAB	IEEE 802.11be (320 MHz, MCS6, 99pc duty cycle)	WLAN	8.40	±9.6
11019	AAB	IEEE 802.11be (320 MHz, MCS7, 99pc duty cycle)	WLAN	8.29	±9.6
11020	AAB	IEEE 802.11be (320 MHz, MCS8, 99pc duty cycle)	WLAN	8.27	±9.6
11021	AAB	IEEE 802.11be (320 MHz, MCS9, 99pc duty cycle)	WLAN	8.46	±9.6
11022	AAB	IEEE 802.11be (320 MHz, MCS10, 99pc duty cycle)	WLAN	8.36	±9.6
11023	AAB	IEEE 802.11be (320 MHz, MCS11, 99pc duty cycle)	WLAN	8.09	±9.6
11024	AAB	IEEE 802.11be (320 MHz, MCS12, 99pc duty cycle)	WLAN	8.42	±9.6
11025	AAB	IEEE 802.11be (320 MHz, MCS13, 99pc duty cycle)	WLAN	8.37	±9.6
11026	AAB	IEEE 802.11be (320 MHz, MCS0, 99pc duty cycle)	WLAN	8.39	±9.6

[E] Uncertainty is determined using the max. deviation from linear response applying rectangular distribution and is expressed for the square of the field value.

F.4 Data Acquisition Electronics (DAE4 - SN:1711)

In Collaboration with
CTTL speag
CALIBRATION LABORATORY

Add: No.52 HuaYuanBei Road, Haidian District, Beijing, 100191, China
Tel: +86-10-62304633-2117
E-mail: emf@caict.ac.cn http://www.caict.ac.cn

ilac-MRA CNAS 中国认可 国际互认 校准 CALIBRATION CNAS L0570 CAICT

Client : baluntek

Certificate No: 24J02Z000100

CALIBRATION CERTIFICATE

Object	DAE4 - SN: 1711
Calibration Procedure(s)	FF-Z11-002-01 Calibration Procedure for the Data Acquisition Electronics (DAEx)
Calibration date:	March 18, 2024

This calibration Certificate documents the traceability to national standards, which realize the physical units of measurements(SI). The measurements and the uncertainties with confidence probability are given on the following pages and are part of the certificate.

All calibrations have been conducted in the closed laboratory facility: environment temperature(22±3)℃ and humidity<70%.

Calibration Equipment used (M&TE critical for calibration)

Primary Standards	ID #	Cal Date(Calibrated by, Certificate No.)	Scheduled Calibration
Process Calibrator 753	1971018	12-Jun-23 (CTTL, No.J23X05436)	Jun-24

	Name	Function	Signature
Calibrated by:	Yu Zongying	SAR Test Engineer	
Reviewed by:	Lin Jun	SAR Test Engineer	
Approved by:	Qi Dianyuan	SAR Project Leader	

Issued: March 20, 2024

This calibration certificate shall not be reproduced except in full without written approval of the laboratory.

Certificate No: 24J02Z000100 Page 1 of 3

In Collaboration with
s p e a g
CALIBRATION LABORATORY

CAICT

Add: No.52 HuaYuanBei Road, Haidian District, Beijing, 100191, China
Tel: +86-10-62304633-2117
E-mail: emf@caict.ac.cn http://www.caict.ac.cn

Glossary:

DAE	data acquisition electronics
Connector angle	information used in DASY system to align probe sensor X to the robot coordinate system.

Methods Applied and Interpretation of Parameters:

- *DC Voltage Measurement*: Calibration Factor assessed for use in DASY system by comparison with a calibrated instrument traceable to national standards. The figure given corresponds to the full scale range of the voltmeter in the respective range.
- *Connector angle*: The angle of the connector is assessed measuring the angle mechanically by a tool inserted. Uncertainty is not required.
- The report provide only calibration results for DAE, it does not contain other performance test results.

In Collaboration with
s p e a g
CALIBRATION LABORATORY

CAICT

Add: No.52 HuaYuanBei Road, Haidian District, Beijing, 100191, China
Tel: +86-10-62304633-2117
E-mail: emf@caict.ac.cn http://www.caict.ac.cn

DC Voltage Measurement

A/D - Converter Resolution nominal

High Range: 1LSB = 6.1μV , full range = -100...+300 mV
Low Range: 1LSB = 61nV , full range = -1.....+3mV

DASY measurement parameters: Auto Zero Time: 3 sec; Measuring time: 3 sec

Calibration Factors	X	Y	Z
High Range	404.486 ± 0.15% (k=2)	404.701 ± 0.15% (k=2)	404.373 ± 0.15% (k=2)
Low Range	3.99686 ± 0.7% (k=2)	4.00367 ± 0.7% (k=2)	3.98307 ± 0.7% (k=2)

Connector Angle

Connector Angle to be used in DASY system	44° ± 1 °

F.5 Data Acquisition Electronics (DAE4 - SN:540)

In Collaboration with
CTTL s p e a g
CALIBRATION LABORATORY

Add: No.52 HuaYuanBei Road, Haidian District, Beijing, 100191, China
Tel: +86-10-62304633-2117
E-mail: emf@caict.ac.cn http://www.caict.ac.cn

ilac-MRA CNAS 中国认可 国际互认 校准 CALIBRATION CNAS L0570 CAICT

Client : Quality Supervision and Testing Center for Data Communication Product, P.R.C

Certificate No: 24J02Z000041

CALIBRATION CERTIFICATE

Object	DAE4 - SN: 540
Calibration Procedure(s)	FF-Z11-002-01 Calibration Procedure for the Data Acquisition Electronics (DAEx)
Calibration date:	February 22, 2024

This calibration Certificate documents the traceability to national standards, which realize the physical units of measurements(SI). The measurements and the uncertainties with confidence probability are given on the following pages and are part of the certificate.

All calibrations have been conducted in the closed laboratory facility: environment temperature (22±3)℃ and humidity<70%.

Calibration Equipment used (M&TE critical for calibration)

Primary Standards	ID #	Cal Date(Calibrated by, Certificate No.)	Scheduled Calibration
Process Calibrator 753	1971018	12-Jun-23 (CTTL, No.J23X05436)	Jun-24

	Name	Function	Signature
Calibrated by:	Yu Zongying	SAR Test Engineer	
Reviewed by:	Lin Jun	SAR Test Engineer	
Approved by:	Qi Dianyuan	SAR Project Leader	

Issued: February 26, 2024

This calibration certificate shall not be reproduced except in full without written approval of the laboratory.

Certificate No: 24J02Z000041 Page 1 of 3

In Collaboration with
s p e a g
CALIBRATION LABORATORY

CAICT

Add: No.52 HuaYuanBei Road, Haidian District, Beijing, 100191, China
Tel: +86-10-62304633-2117
E-mail: emf@caict.ac.cn http://www.caict.ac.cn

Glossary:

DAE	data acquisition electronics
Connector angle	information used in DASY system to align probe sensor X to the robot coordinate system.

Methods Applied and Interpretation of Parameters:

- *DC Voltage Measurement*: Calibration Factor assessed for use in DASY system by comparison with a calibrated instrument traceable to national standards. The figure given corresponds to the full scale range of the voltmeter in the respective range.
- *Connector angle*: The angle of the connector is assessed measuring the angle mechanically by a tool inserted. Uncertainty is not required.
- The report provide only calibration results for DAE, it does not contain other performance test results.

In Collaboration with
s p e a g
CALIBRATION LABORATORY

CAICT

Add: No.52 HuaYuanBei Road, Haidian District, Beijing, 100191, China
Tel: +86-10-62304633-2117
E-mail: emf@caict.ac.cn http://www.caict.ac.cn

DC Voltage Measurement

A/D - Converter Resolution nominal

High Range: 1LSB = 6.1μV , full range = -100...+300 mV
Low Range: 1LSB = 61nV , full range = -1.....+3mV

DASY measurement parameters: Auto Zero Time: 3 sec; Measuring time: 3 sec

Calibration Factors	X	Y	Z
High Range	403.438 ± 0.15% (k=2)	403.318 ± 0.15% (k=2)	403.692 ± 0.15% (k=2)
Low Range	3.94051 ± 0.7% (k=2)	3.96783 ± 0.7% (k=2)	3.93970 ± 0.7% (k=2)

Connector Angle

Connector Angle to be used in DASY system	214.5° ± 1°

F.6 Data Acquisition Electronics (DAE4 - SN:905)

In Collaboration with
CTTL speag
CALIBRATION LABORATORY

Add: No.52 HuaYuanBei Road, Haidian District, Beijing, 100191, China
Tel: +86-10-62304633-2117
E-mail: emf@caict.ac.cn http://www.caict.ac.cn

ilac-MRA CNAS 中国认可 国际互认 校准 CALIBRATION CNAS L0570 CAICT

Client : Auden

Certificate No: 24J02Z000343

CALIBRATION CERTIFICATE

Object	DAE4 - SN: 905
Calibration Procedure(s)	FF-Z11-002-01 Calibration Procedure for the Data Acquisition Electronics (DAEx)
Calibration date:	June 28, 2024

This calibration Certificate documents the traceability to national standards, which realize the physical units of measurements(SI). The measurements and the uncertainties with confidence probability are given on the following pages and are part of the certificate.

All calibrations have been conducted in the closed laboratory facility: environment temperature(22±3)℃ and humidity<70%.

Calibration Equipment used (M&TE critical for calibration)

Primary Standards	ID #	Cal Date(Calibrated by, Certificate No.)	Scheduled Calibration
Process Calibrator 753	1971018	11-Jun-24 (CTTL, No.24J02X005147)	Jun-25

	Name	Function	Signature
Calibrated by:	Yu Zongying	SAR Test Engineer	
Reviewed by:	Lin Jun	SAR Test Engineer	
Approved by:	Qi Dianyuan	SAR Project Leader	

Issued: July 03, 2024

This calibration certificate shall not be reproduced except in full without written approval of the laboratory.

Certificate No: 24J02Z000343 Page 1 of 3

In Collaboration with
s p e a g
CALIBRATION LABORATORY

CAICT

Add: No.52 HuaYuanBei Road, Haidian District, Beijing, 100191, China
Tel: +86-10-62304633-2117
E-mail: emf@caict.ac.cn http://www.caict.ac.cn

Glossary:

DAE	data acquisition electronics
Connector angle	information used in DASY system to align probe sensor X to the robot coordinate system.

Methods Applied and Interpretation of Parameters:

- *DC Voltage Measurement*: Calibration Factor assessed for use in DASY system by comparison with a calibrated instrument traceable to national standards. The figure given corresponds to the full scale range of the voltmeter in the respective range.
- *Connector angle*: The angle of the connector is assessed measuring the angle mechanically by a tool inserted. Uncertainty is not required.
- The report provide only calibration results for DAE, it does not contain other performance test results.

In Collaboration with
s p e a g
CALIBRATION LABORATORY

Add: No.52 HuaYuanBei Road, Haidian District, Beijing, 100191, China
Tel: +86-10-62304633-2117
E-mail: emf@caict.ac.cn http://www.caict.ac.cn

DC Voltage Measurement

A/D - Converter Resolution nominal

High Range: 1LSB = 6.1μV , full range = -100...+300 mV
Low Range: 1LSB = 61nV , full range = -1.....+3mV

DASY measurement parameters: Auto Zero Time: 3 sec; Measuring time: 3 sec

Calibration Factors	X	Y	Z
High Range	404.676 ± 0.15% (k=2)	405.227 ± 0.15% (k=2)	404.809 ± 0.15% (k=2)
Low Range	3.97816 ± 0.7% (k=2)	4.00125 ± 0.7% (k=2)	3.99596 ± 0.7% (k=2)

Connector Angle

Connector Angle to be used in DASY system	357° ± 1 °

F.7 750MHz Dipole

In Collaboration with
s p e a g
CALIBRATION LABORATORY

Add: No.52 HuaYuanBei Road, Haidian District, Beijing, 100191
Tel: +86-10-62304633-2117
E-mail: emf@caict.ac.cn http://www.caict.ac.cn

中国认可
国际互认
校准
CALIBRATION
CNAS L0570

Client: **baluntek** **Certificate No: 24J02Z000457**

CALIBRATION CERTIFICATE

Object	D750V3 - SN: 1208
Calibration Procedure(s)	FF-Z11-003-01 Calibration Procedures for dipole validation kits
Calibration date:	August 19, 2024

This calibration Certificate documents the traceability to national standards, which realize the physical units of measurements (SI). The measurements and the uncertainties with confidence probability are given on the following pages and are part of the certificate.

All calibrations have been conducted in the closed laboratory facility: environment temperature (22±3)°C and humidity<70%.

Calibration Equipment used (M&TE critical for calibration)

Primary Standards	ID #	Cal Date (Calibrated by, Certificate No.)	Scheduled Calibration
Power Meter NRP2	106276	17-May-24 (CTTL, No. J24X04107)	May-25
Power sensor NRP6A	101369	17-May-24 (CTTL, No. J24X04107)	May-25
Reference Probe EX3DV4	SN 7464	22-Jan-24(SPEAG, No. EX-7464_Jan24)	Jan-25
DAE4	SN 1556	03-Jan-24(CTTL-SPEAG, No.24J02Z80002)	Jan-25
Secondary Standards	**ID #**	**Cal Date (Calibrated by, Certificate No.)**	**Scheduled Calibration**
Signal Generator E4438C	MY49071430	25-Dec-23 (CTTL, No. J23X13426)	Dec-24
NetworkAnalyzer E5071C	MY46110673	25-Dec-23 (CTTL, No. J23X13425)	Dec-24
OCP DAK-3.5(weighted)	1040	22-Jan-24(SPEAG, No.OCP-DAK3.5-1040_Jan24)	Jan-25

	Name	Function	Signature
Calibrated by:	Zhao Jing	SAR Test Engineer	
Reviewed by:	Lin Jun	SAR Test Engineer	
Approved by:	Qi Dianyuan	SAR Project Leader	

Issued: August 30, 2024

This calibration certificate shall not be reproduced except in full without written approval of the laboratory.

Certificate No: 24J02Z000457 Page 1 of 6

In Collaboration with
s p e a g
CALIBRATION LABORATORY

CAICT

Add: No.52 HuaYuanBei Road, Haidian District, Beijing, 100191, China
Tel: +86-10-62304633-2117
E-mail: emf@caict.ac.cn http://www.caict.ac.cn

Glossary:

TSL	tissue simulating liquid
ConvF	sensitivity in TSL / NORMx,y,z
N/A	not applicable or not measured

Calibration is Performed According to the Following Standards:

a) IEC/IEEE 62209-1528, "Measurement Procedure for The Assessment of Specific Absorption Rate of Human Exposure to Radio Frequency Fields from Hand-held and Body-mounted Wireless Communication Devices- Part 1528: Human Models, Instrumentation and Procedures (Frequency range of 4 MHz to 10 GHz)", October 2020

b) KDB 865664, "SAR Measurement Requirements for 100 MHz to 6 GHz"

Additional Documentation:

c) DASY4/5 System Handbook

Methods Applied and Interpretation of Parameters:

- *Measurement Conditions:* Further details are available from the Validation Report at the end of the certificate. All figures stated in the certificate are valid at the frequency indicated.
- *Antenna Parameters with TSL:* The dipole is mounted with the spacer to position its feed point exactly below the center marking of the flat phantom section, with the arms oriented parallel to the body axis.
- *Feed Point Impedance and Return Loss:* These parameters are measured with the dipole positioned under the liquid filled phantom. The impedance stated is transformed from the measurement at the SMA connector to the feed point. The Return Loss ensures low reflected power. No uncertainty required.
- *Electrical Delay:* One-way delay between the SMA connector and the antenna feed point. No uncertainty required.
- *SAR measured:* SAR measured at the stated antenna input power.
- *SAR normalized:* SAR as measured, normalized to an input power of 1 W at the antenna connector.
- *SAR for nominal TSL parameters:* The measured TSL parameters are used to calculate the nominal SAR result.

The reported uncertainty of measurement is stated as the standard uncertainty of Measurement multiplied by the coverage factor k=2, which for a normal distribution Corresponds to a coverage probability of approximately 95%.

In Collaboration with
s p e a g
CALIBRATION LABORATORY

CAICT

Add: No.52 HuaYuanBei Road, Haidian District, Beijing, 100191, China
Tel: +86-10-62304633-2117
E-mail: emf@caict.ac.cn http://www.caict.ac.cn

Measurement Conditions

DASY system configuration, as far as not given on page 1.

DASY Version	DASY52	V52.10.4
Extrapolation	Advanced Extrapolation	
Phantom	Triple Flat Phantom 5.1C	
Distance Dipole Center - TSL	15 mm	with Spacer
Zoom Scan Resolution	dx, dy, dz = 5 mm	
Frequency	750 MHz ± 1 MHz	

Head TSL parameters

The following parameters and calculations were applied.

	Temperature	**Permittivity**	**Conductivity**
Nominal Head TSL parameters	22.0 °C	41.9	0.89 mho/m
Measured Head TSL parameters	(22.0 ± 0.2) °C	41.3 ± 6 %	0.91 mho/m ± 6 %
Head TSL temperature change during test	<1.0 °C	----	----

SAR result with Head TSL

SAR averaged over 1 cm^3 (1 g) of Head TSL	Condition	
SAR measured	250 mW input power	2.16 W/kg
SAR for nominal Head TSL parameters	normalized to 1W	**8.46 W/kg ± 18.8 % (*k*=2)**
SAR averaged over 10 cm^3 (10 g) of Head TSL	Condition	
SAR measured	250 mW input power	1.45 W/kg
SAR for nominal Head TSL parameters	normalized to 1W	**5.70 W/kg ± 18.7 % (*k*=2)**

In Collaboration with
s p e a g
CALIBRATION LABORATORY

CAICT

Add: No.52 HuaYuanBei Road, Haidian District, Beijing, 100191, China
Tel: +86-10-62304633-2117
E-mail: emf@caict.ac.cn http://www.caict.ac.cn

Appendix (Additional assessments outside the scope of CNAS L0570)

Antenna Parameters with Head TSL

Impedance, transformed to feed point	50.1Ω- 1.96jΩ
Return Loss	- 34.2dB

General Antenna Parameters and Design

Electrical Delay (one direction)	0.938 ns

After long term use with 100W radiated power, only a slight warming of the dipole near the feed-point can be measured.

The dipole is made of standard semirigid coaxial cable. The center conductor of the feeding line is directly connected to the second arm of the dipole. The antenna is therefore short-circuited for DC-signals. On some of the dipoles, small end caps are added to the dipole arms in order to improve matching when loaded according to the position as explained in the "Measurement Conditions" paragraph. The SAR data are not affected by this change. The overall dipole length is still according to the Standard.
No excessive force must be applied to the dipole arms, because they might bend or the soldered connections near the feed-point may be damaged.

Additional EUT Data

Manufactured by	SPEAG

In Collaboration with
s p e a g
CALIBRATION LABORATORY

CAICT

Add: No.52 HuaYuanBei Road, Haidian District, Beijing, 100191, China
Tel: +86-10-62304633-2117
E-mail: emf@caict.ac.cn http://www.caict.ac.cn

DASY5 Validation Report for Head TSL Date: 2024-08-19

Test Laboratory: CTTL, Beijing, China

DUT: Dipole 750 MHz; Type: D750V3; Serial: D750V3 - SN: 1208

Communication System: UID 0, CW; Frequency: 750 MHz

Medium parameters used: f = 750 MHz; σ = 0.911 S/m; ε_r = 41.27; ρ = 1000 kg/m^3

Phantom section: Right Section

Measurement Standard: DASY5 (IEEE/IEC/ANSI C63.19-2007)

DASY5 Configuration:

- Probe: EX3DV4 - SN7464; ConvF(9.09, 9.18, 9.51) @ 750 MHz; Calibrated: 2024-01-22
- Sensor-Surface: 1.4mm (Mechanical Surface Detection)
- Electronics: DAE4 Sn1556; Calibrated: 2024-01-03
- Phantom: MFP_V5.1C (20deg probe tilt); Type: QD 000 P51 Cx; Serial: 1062
- DASY52 52.10.4(1535); SEMCAD X 14.6.14(7501)

Dipole Calibration/Zoom Scan (7x7x7) (7x7x7)/Cube 0: Measurement grid: dx=5mm, dy=5mm, dz=5mm

Reference Value = 54.63 V/m; Power Drift = -0.04 dB

Peak SAR (extrapolated) = 3.12 W/kg

SAR(1 g) = 2.16 W/kg; SAR(10 g) = 1.45 W/kg

Smallest distance from peaks to all points 3 dB below = 17.5 mm

Ratio of SAR at M2 to SAR at M1 = 69.2%

Maximum value of SAR (measured) = 2.83 W/kg

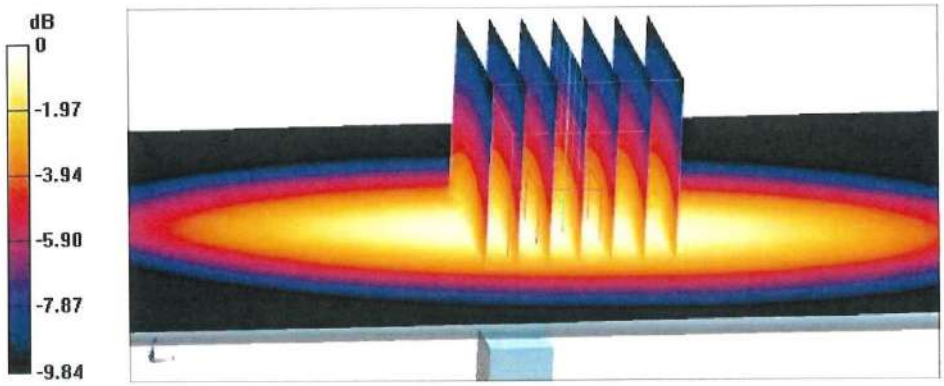

0 dB = 2.83 W/kg = 4.52 dBW/kg

In Collaboration with
s p e a g
CALIBRATION LABORATORY

CAICT

Add: No.52 HuaYuanBei Road, Haidian District, Beijing, 100191, China
Tel: +86-10-62304633-2117
E-mail: emf@caict.ac.cn http://www.caict.ac.cn

Impedance Measurement Plot for Head TSL

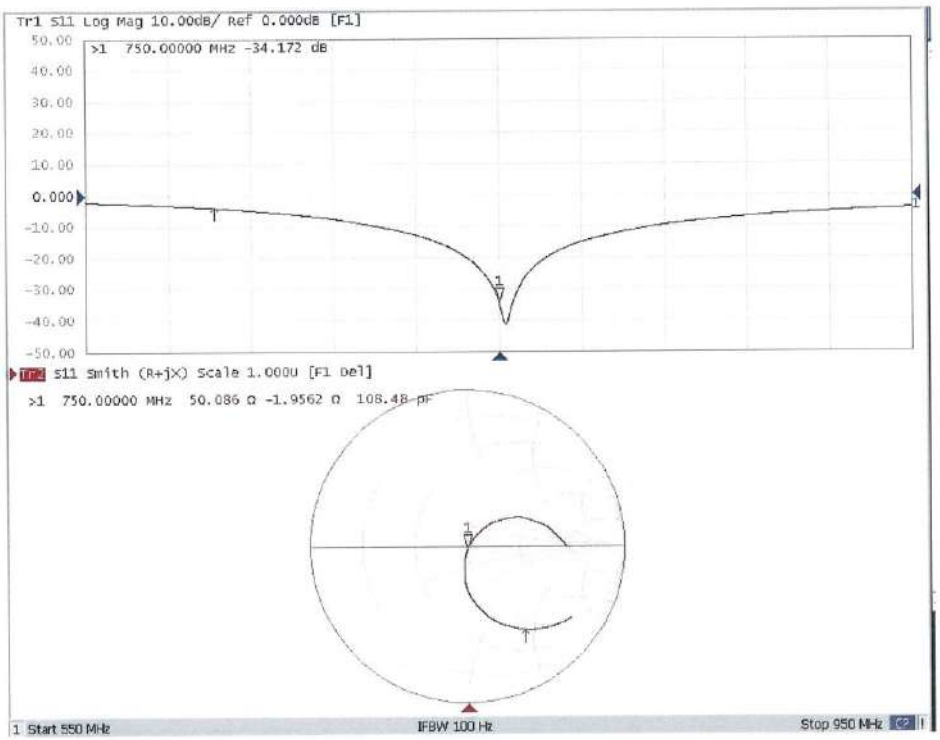

Certificate No: 24J02Z000457 Page 6 of 6

F.8 835 MHz Dipole

In Collaboration with
CTTL speag CALIBRATION LABORATORY
Add: No.52 HuaYuanBei Road, Haidian District, Beijing, 100191
Tel: +86-10-62304633-2117
E-mail: emf@caict.ac.cn http://www.caict.ac.cn

ilac-MRA CNAS 中国认可 国际互认 校准 CALIBRATION CNAS L0570 CAICT

Client **Baluntek** **Certificate No: 24J02Z000387**

CALIBRATION CERTIFICATE

Object	D835V2 - SN: 4d187
Calibration Procedure(s)	FF-Z11-003-01 Calibration Procedures for dipole validation kits
Calibration date:	May 8, 2024

This calibration Certificate documents the traceability to national standards, which realize the physical units of measurements (SI). The measurements and the uncertainties with confidence probability are given on the following pages and are part of the certificate.

All calibrations have been conducted in the closed laboratory facility: environment temperature (22±3)°C and humidity<70%.

Calibration Equipment used (M&TE critical for calibration)

Primary Standards	ID #	Cal Date (Calibrated by, Certificate No.)	Scheduled Calibration
Power Meter NRP2	106276	15-May-23 (CTTL, No.J23X04183)	May-24
Power sensor NRP6A	101369	15-May-23 (CTTL, No.J23X04183)	May-24
ReferenceProbe EX3DV4	SN 3846	31-May-23(SPEAG,No.EX-3846_May23)	May-24
DAE4	SN 1556	03-Jan-24(CTTL-SPEAG,No.24J02Z80002)	Jan-25
Secondary Standards	**ID #**	**Cal Date (Calibrated by, Certificate No.)**	**Scheduled Calibration**
Signal Generator E4438C	MY49071430	25-Dec-23 (CTTL, No. J23X13426)	Dec-24
NetworkAnalyzer E5071C	MY46110673	25-Dec-23 (CTTL, No. J23X13425)	Dec-24
OCP DAK-3.5(weighted)	1040	22-Jan-24(SPEAG, No.OCP-DAK3.5-1040_Jan24)	Jan-25

	Name	Function	Signature
Calibrated by:	Zhao Jing	SAR Test Engineer	
Reviewed by:	Lin Jun	SAR Test Engineer	
Approved by:	Qi Dianyuan	SAR Project Leader	

Issued: May 13, 2024

This calibration certificate shall not be reproduced except in full without written approval of the laboratory.

Certificate No: 24J02Z000387 Page 1 of 6

In Collaboration with
s p e a g
CALIBRATION LABORATORY

CAICT

Add: No.52 HuaYuanBei Road, Haidian District, Beijing, 100191, China
Tel: +86-10-62304633-2117
E-mail: emf@caict.ac.cn http://www.caict.ac.cn

Glossary:

TSL	tissue simulating liquid
ConvF	sensitivity in TSL / NORMx,y,z
N/A	not applicable or not measured

Calibration is Performed According to the Following Standards:

a) IEC/IEEE 62209-1528, "Measurement Procedure for The Assessment of Specific Absorption Rate of Human Exposure to Radio Frequency Fields from Hand-held and Body-mounted Wireless Communication Devices- Part 1528: Human Models, Instrumentation and Procedures (Frequency range of 4 MHz to 10 GHz)", October 2020

b) KDB 865664, "SAR Measurement Requirements for 100 MHz to 6 GHz"

Additional Documentation:

c) DASY4/5 System Handbook

Methods Applied and Interpretation of Parameters:

- *Measurement Conditions:* Further details are available from the Validation Report at the end of the certificate. All figures stated in the certificate are valid at the frequency indicated.
- *Antenna Parameters with TSL:* The dipole is mounted with the spacer to position its feed point exactly below the center marking of the flat phantom section, with the arms oriented parallel to the body axis.
- *Feed Point Impedance and Return Loss:* These parameters are measured with the dipole positioned under the liquid filled phantom. The impedance stated is transformed from the measurement at the SMA connector to the feed point. The Return Loss ensures low reflected power. No uncertainty required.
- *Electrical Delay:* One-way delay between the SMA connector and the antenna feed point. No uncertainty required.
- *SAR measured:* SAR measured at the stated antenna input power.
- *SAR normalized:* SAR as measured, normalized to an input power of 1 W at the antenna connector.
- *SAR for nominal TSL parameters:* The measured TSL parameters are used to calculate the nominal SAR result.

The reported uncertainty of measurement is stated as the standard uncertainty of Measurement multiplied by the coverage factor k=2, which for a normal distribution Corresponds to a coverage probability of approximately 95%.

In Collaboration with
s p e a g
CALIBRATION LABORATORY

CAICT

Add: No.52 HuaYuanBei Road, Haidian District, Beijing, 100191, China
Tel: +86-10-62304633-2117
E-mail: emf@caict.ac.cn http://www.caict.ac.cn

Measurement Conditions

DASY system configuration, as far as not given on page 1.

DASY Version	DASY52	V52.10.4
Extrapolation	Advanced Extrapolation	
Phantom	Triple Flat Phantom 5.1C	
Distance Dipole Center - TSL	15 mm	with Spacer
Zoom Scan Resolution	dx, dy, dz = 5 mm	
Frequency	835 MHz ± 1 MHz	

Head TSL parameters

The following parameters and calculations were applied.

	Temperature	**Permittivity**	**Conductivity**
Nominal Head TSL parameters	22.0 °C	41.5	0.90 mho/m
Measured Head TSL parameters	(22.0 ± 0.2) °C	42.3 ± 6 %	0.92 mho/m ± 6 %
Head TSL temperature change during test	<1.0 °C	----	----

SAR result with Head TSL

SAR averaged over 1 cm^3 (1 g) of Head TSL	Condition	
SAR measured	250 mW input power	2.46 W/kg
SAR for nominal Head TSL parameters	normalized to 1W	**9.74 W/kg ± 18.8 % (*k*=2)**
SAR averaged over 10 cm^3 (10 g) of Head TSL	Condition	
SAR measured	250 mW input power	1.62 W/kg
SAR for nominal Head TSL parameters	normalized to 1W	**6.43 W/kg ± 18.7 % (*k*=2)**

In Collaboration with
s p e a g
CALIBRATION LABORATORY

CAICT

Add: No.52 HuaYuanBei Road, Haidian District, Beijing, 100191, China
Tel: +86-10-62304633-2117
E-mail: emf@caict.ac.cn http://www.caict.ac.cn

Appendix (Additional assessments outside the scope of CNAS L0570)

Antenna Parameters with Head TSL

Impedance, transformed to feed point	49.8Ω- 3.20jΩ
Return Loss	- 29.9dB

General Antenna Parameters and Design

Electrical Delay (one direction)	1.300 ns

After long term use with 100W radiated power, only a slight warming of the dipole near the feed-point can be measured.

The dipole is made of standard semirigid coaxial cable. The center conductor of the feeding line is directly connected to the second arm of the dipole. The antenna is therefore short-circuited for DC-signals. On some of the dipoles, small end caps are added to the dipole arms in order to improve matching when loaded according to the position as explained in the "Measurement Conditions" paragraph. The SAR data are not affected by this change. The overall dipole length is still according to the Standard.
No excessive force must be applied to the dipole arms, because they might bend or the soldered connections near the feed-point may be damaged.

Additional EUT Data

Manufactured by	SPEAG

In Collaboration with
s p e a g
CALIBRATION LABORATORY

CAICT

Add: No.52 HuaYuanBei Road, Haidian District, Beijing, 100191, China
Tel: +86-10-62304633-2117
E-mail: emf@caict.ac.cn http://www.caict.ac.cn

DASY5 Validation Report for Head TSL Date: 2024-05-08

Test Laboratory: CTTL, Beijing, China

DUT: Dipole 835 MHz; Type: D835V2; Serial: D835V2 - SN: 4d187

Communication System: UID 0, CW; Frequency: 835 MHz

Medium parameters used: f = 835 MHz; σ = 0.917 S/m; ε_r = 42.31; ρ = 1000 kg/m^3

Phantom section: Right Section

Measurement Standard: DASY5 (IEEE/IEC/ANSI C63.19-2007)

DASY5 Configuration:

- Probe: EX3DV4 - SN3846; ConvF(8.5, 9.01, 9.47) @ 835 MHz; Calibrated: 2023-05-31
- Sensor-Surface: 1.4mm (Mechanical Surface Detection)
- Electronics: DAE4 Sn1556; Calibrated: 2024-01-03
- Phantom: MFP_V5.1C (20deg probe tilt); Type: QD 000 P51 Cx; Serial: 1062
- DASY52 52.10.4(1535); SEMCAD X 14.6.14(7501)

Dipole Calibration/Zoom Scan (7x7x7) (7x7x7)/Cube 0: Measurement grid: dx=5mm, dy=5mm, dz=5mm

Reference Value = 59.10 V/m; Power Drift = 0.00 dB

Peak SAR (extrapolated) = 3.51 W/kg

SAR(1 g) = 2.46 W/kg; SAR(10 g) = 1.62 W/kg

Smallest distance from peaks to all points 3 dB below = 16.2 mm

Ratio of SAR at M2 to SAR at M1 = 70%

Maximum value of SAR (measured) = 3.20 W/kg

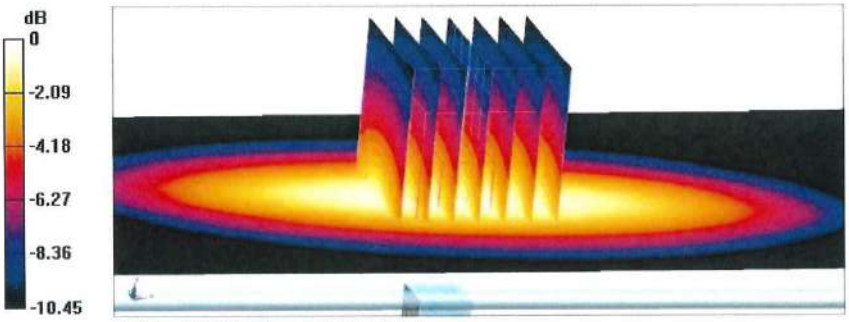

0 dB = 3.20 W/kg = 5.05 dBW/kg

In Collaboration with
s p e a g
CALIBRATION LABORATORY

CAICT

Add: No.52 HuaYuanBei Road, Haidian District, Beijing, 100191, China
Tel: +86-10-62304633-2117
E-mail: emf@caict.ac.cn http://www.caict.ac.cn

Impedance Measurement Plot for Head TSL

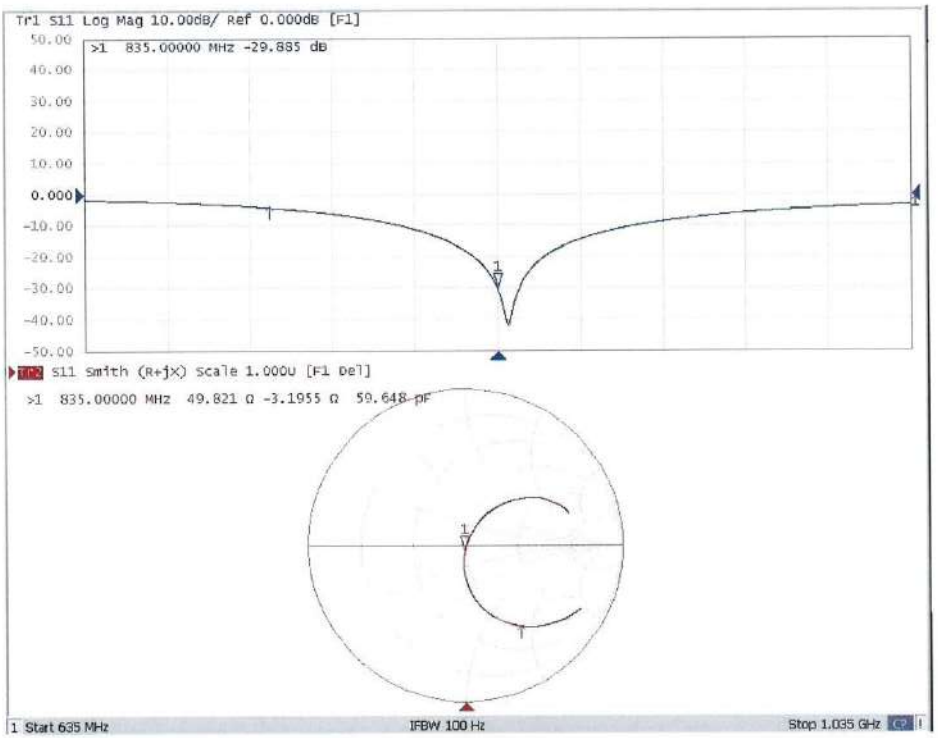

Certificate No: 24J02Z000387 Page 6 of 6

F.9 1750 MHz Dipole

In Collaboration with
TTL speag CALIBRATION LABORATORY

Add: No.52 HuaYuanBei Road, Haidian District, Beijing, 100191
Tel: +86-10-62304633-2117
E-mail: emf@caict.ac.cn http://www.caict.ac.cn

ilac-MRA CNAS 中国认可 国际互认 校准 CALIBRATION CNAS L0570 CAICT

Client Baluntek Certificate No: 24J02Z000388

CALIBRATION CERTIFICATE

Object	D1750V2 - SN: 1130
Calibration Procedure(s)	FF-Z11-003-01 Calibration Procedures for dipole validation kits
Calibration date:	May 8, 2024

This calibration Certificate documents the traceability to national standards, which realize the physical units of measurements (SI). The measurements and the uncertainties with confidence probability are given on the following pages and are part of the certificate.

All calibrations have been conducted in the closed laboratory facility: environment temperature (22±3)℃ and humidity<70%.

Calibration Equipment used (M&TE critical for calibration)

Primary Standards	ID #	Cal Date (Calibrated by, Certificate No.)	Scheduled Calibration
Power Meter NRP2	106276	15-May-23 (CTTL, No.J23X04183)	May-24
Power sensor NRP6A	101369	15-May-23 (CTTL, No.J23X04183)	May-24
ReferenceProbe EX3DV4	SN 3846	31-May-23(SPEAG,No.EX-3846_May23)	May-24
DAE4	SN 1556	03-Jan-24(CTTL-SPEAG,No.24J02Z80002)	Jan-25
Secondary Standards	**ID #**	**Cal Date (Calibrated by, Certificate No.)**	**Scheduled Calibration**
Signal Generator E4438C	MY49071430	25-Dec-23 (CTTL, No. J23X13426)	Dec-24
NetworkAnalyzer E5071C	MY46110673	25-Dec-23 (CTTL, No. J23X13425)	Dec-24
OCP DAK-3.5(weighted)	1040	22-Jan-24(SPEAG, No.OCP-DAK3.5-1040_Jan24)	Jan-25

	Name	Function	Signature
Calibrated by:	Zhao Jing	SAR Test Engineer	
Reviewed by:	Lin Jun	SAR Test Engineer	
Approved by:	Qi Dianyuan	SAR Project Leader	

Issued: May 13, 2024

This calibration certificate shall not be reproduced except in full without written approval of the laboratory.

Certificate No: 24J02Z000388 Page 1 of 6

In Collaboration with
s p e a g
CALIBRATION LABORATORY

CAICT

Add: No.52 HuaYuanBei Road, Haidian District, Beijing, 100191, China
Tel: +86-10-62304633-2117
E-mail: emf@caict.ac.cn http://www.caict.ac.cn

Glossary:

TSL	tissue simulating liquid
ConvF	sensitivity in TSL / NORMx,y,z
N/A	not applicable or not measured

Calibration is Performed According to the Following Standards:

a) IEC/IEEE 62209-1528, "Measurement Procedure for The Assessment of Specific Absorption Rate of Human Exposure to Radio Frequency Fields from Hand-held and Body-mounted Wireless Communication Devices- Part 1528: Human Models, Instrumentation and Procedures (Frequency range of 4 MHz to 10 GHz)", October 2020

b) KDB 865664, "SAR Measurement Requirements for 100 MHz to 6 GHz"

Additional Documentation:

c) DASY4/5 System Handbook

Methods Applied and Interpretation of Parameters:

- *Measurement Conditions:* Further details are available from the Validation Report at the end of the certificate. All figures stated in the certificate are valid at the frequency indicated.
- *Antenna Parameters with TSL:* The dipole is mounted with the spacer to position its feed point exactly below the center marking of the flat phantom section, with the arms oriented parallel to the body axis.
- *Feed Point Impedance and Return Loss:* These parameters are measured with the dipole positioned under the liquid filled phantom. The impedance stated is transformed from the measurement at the SMA connector to the feed point. The Return Loss ensures low reflected power. No uncertainty required.
- *Electrical Delay:* One-way delay between the SMA connector and the antenna feed point. No uncertainty required.
- *SAR measured:* SAR measured at the stated antenna input power.
- *SAR normalized:* SAR as measured, normalized to an input power of 1 W at the antenna connector.
- *SAR for nominal TSL parameters:* The measured TSL parameters are used to calculate the nominal SAR result.

The reported uncertainty of measurement is stated as the standard uncertainty of Measurement multiplied by the coverage factor k=2, which for a normal distribution Corresponds to a coverage probability of approximately 95%.

In Collaboration with
s p e a g
CALIBRATION LABORATORY

CAICT

Add: No.52 HuaYuanBei Road, Haidian District, Beijing, 100191, China
Tel: +86-10-62304633-2117
E-mail: emf@caict.ac.cn http://www.caict.ac.cn

Measurement Conditions

DASY system configuration, as far as not given on page 1.

DASY Version	DASY52	52.10.4
Extrapolation	Advanced Extrapolation	
Phantom	Triple Flat Phantom 5.1C	
Distance Dipole Center - TSL	10 mm	with Spacer
Zoom Scan Resolution	dx, dy, dz = 5 mm	
Frequency	1750 MHz ± 1 MHz	

Head TSL parameters

The following parameters and calculations were applied.

	Temperature	**Permittivity**	**Conductivity**
Nominal Head TSL parameters	22.0 °C	40.1	1.37 mho/m
Measured Head TSL parameters	(22.0 ± 0.2) °C	40.0 ± 6 %	1.35 mho/m ± 6 %
Head TSL temperature change during test	<1.0 °C	----	----

SAR result with Head TSL

SAR averaged over 1 cm^3 (1 g) of Head TSL	Condition	
SAR measured	250 mW input power	9.15 W/kg
SAR for nominal Head TSL parameters	normalized to 1W	**37.0 W/kg ± 18.8 % (k=2)**
SAR averaged over 10 cm^3 (10 g) of Head TSL	Condition	
SAR measured	250 mW input power	4.90 W/kg
SAR for nominal Head TSL parameters	normalized to 1W	**19.7 W/kg ± 18.7 % (k=2)**

In Collaboration with
s p e a g
CALIBRATION LABORATORY

CAICT

Add: No.52 HuaYuanBei Road, Haidian District, Beijing, 100191, China
Tel: +86-10-62304633-2117
E-mail: emf@caict.ac.cn http://www.caict.ac.cn

Measurement Conditions

DASY system configuration, as far as not given on page 1.

DASY Version	DASY52	52.10.4
Extrapolation	Advanced Extrapolation	
Phantom	Triple Flat Phantom 5.1C	
Distance Dipole Center - TSL	10 mm	with Spacer
Zoom Scan Resolution	dx, dy, dz = 5 mm	
Frequency	1750 MHz ± 1 MHz	

Head TSL parameters

The following parameters and calculations were applied.

	Temperature	**Permittivity**	**Conductivity**
Nominal Head TSL parameters	22.0 °C	40.1	1.37 mho/m
Measured Head TSL parameters	(22.0 ± 0.2) °C	40.0 ± 6 %	1.35 mho/m ± 6 %
Head TSL temperature change during test	<1.0 °C	----	----

SAR result with Head TSL

SAR averaged over 1 cm^3 (1 g) of Head TSL	Condition	
SAR measured	250 mW input power	9.15 W/kg
SAR for nominal Head TSL parameters	normalized to 1W	**37.0 W/kg ± 18.8 % (k=2)**
SAR averaged over 10 cm^3 (10 g) of Head TSL	Condition	
SAR measured	250 mW input power	4.90 W/kg
SAR for nominal Head TSL parameters	normalized to 1W	**19.7 W/kg ± 18.7 % (k=2)**

In Collaboration with
s p e a g
CALIBRATION LABORATORY

CAICT

Add: No.52 HuaYuanBei Road, Haidian District, Beijing, 100191, China
Tel: +86-10-62304633-2117
E-mail: emf@caict.ac.cn http://www.caict.ac.cn

Appendix (Additional assessments outside the scope of CNAS L0570)

Antenna Parameters with Head TSL

Impedance, transformed to feed point	47.8Ω- 0.53jΩ
Return Loss	- 32.7dB

General Antenna Parameters and Design

Electrical Delay (one direction)	1.128 ns

After long term use with 100W radiated power, only a slight warming of the dipole near the feed-point can be measured.

The dipole is made of standard semirigid coaxial cable. The center conductor of the feeding line is directly connected to the second arm of the dipole. The antenna is therefore short-circuited for DC-signals. On some of the dipoles, small end caps are added to the dipole arms in order to improve matching when loaded according to the position as explained in the "Measurement Conditions" paragraph. The SAR data are not affected by this change. The overall dipole length is still according to the Standard.
No excessive force must be applied to the dipole arms, because they might bend or the soldered connections near the feed-point may be damaged.

Additional EUT Data

Manufactured by	SPEAG

In Collaboration with
s p e a g
CALIBRATION LABORATORY

CAICT

Add: No.52 HuaYuanBei Road, Haidian District, Beijing, 100191, China
Tel: +86-10-62304633-2117
E-mail: emf@caict.ac.cn http://www.caict.ac.cn

DASY5 Validation Report for Head TSL Date: 2024-05-08

Test Laboratory: CTTL, Beijing, China

DUT: Dipole 1750 MHz; Type: D1750V2; Serial: D1750V2 - SN: 1130

Communication System: UID 0, CW; Frequency: 1750 MHz; Duty Cycle: 1:1

Medium parameters used: f = 1750 MHz; σ = 1.348 S/m; ε_r = 40.02; ρ = 1000 kg/m^3

Phantom section: Right Section

Measurement Standard: DASY5 (IEEE/IEC/ANSI C63.19-2007)

DASY5 Configuration:

- Probe: EX3DV4 - SN3846; ConvF(7.47, 7.79, 8.45) @ 1750 MHz; Calibrated: 2023-05-31
- Sensor-Surface: 1.4mm (Mechanical Surface Detection)
- Electronics: DAE4 Sn1556; Calibrated: 2024-01-03
- Phantom: MFP_V5.1C (20deg probe tilt); Type: QD 000 P51 Cx; Serial: 1062
- DASY52 52.10.4(1535); SEMCAD X 14.6.14(7501)

Dipole Calibration/Zoom Scan (7x7x7) (7x7x7)/Cube 0: Measurement grid: dx=5mm, dy=5mm, dz=5mm

Reference Value = 95.47 V/m; Power Drift = 0.01 dB

Peak SAR (extrapolated) = 16.2 W/kg

SAR(1 g) = 9.15 W/kg; SAR(10 g) = 4.9 W/kg

Smallest distance from peaks to all points 3 dB below = 9.8 mm

Ratio of SAR at M2 to SAR at M1 = 57.1%

Maximum value of SAR (measured) = 13.8 W/kg

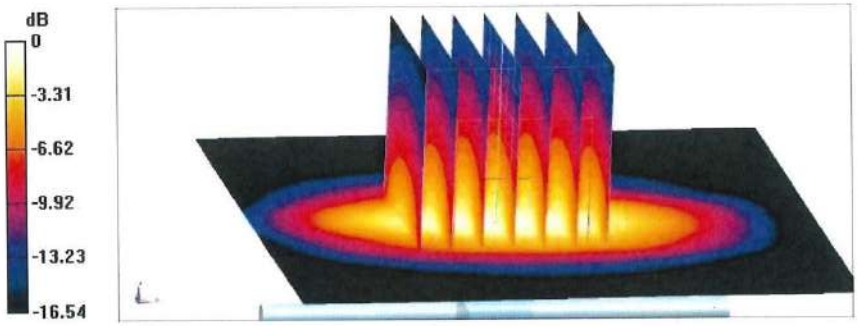

0 dB = 13.8 W/kg = 11.40 dBW/kg

In Collaboration with
s p e a g
CALIBRATION LABORATORY

CAICT

Add: No.52 HuaYuanBei Road, Haidian District, Beijing, 100191, China
Tel: +86-10-62304633-2117
E-mail: emf@caict.ac.cn http://www.caict.ac.cn

Impedance Measurement Plot for Head TSL

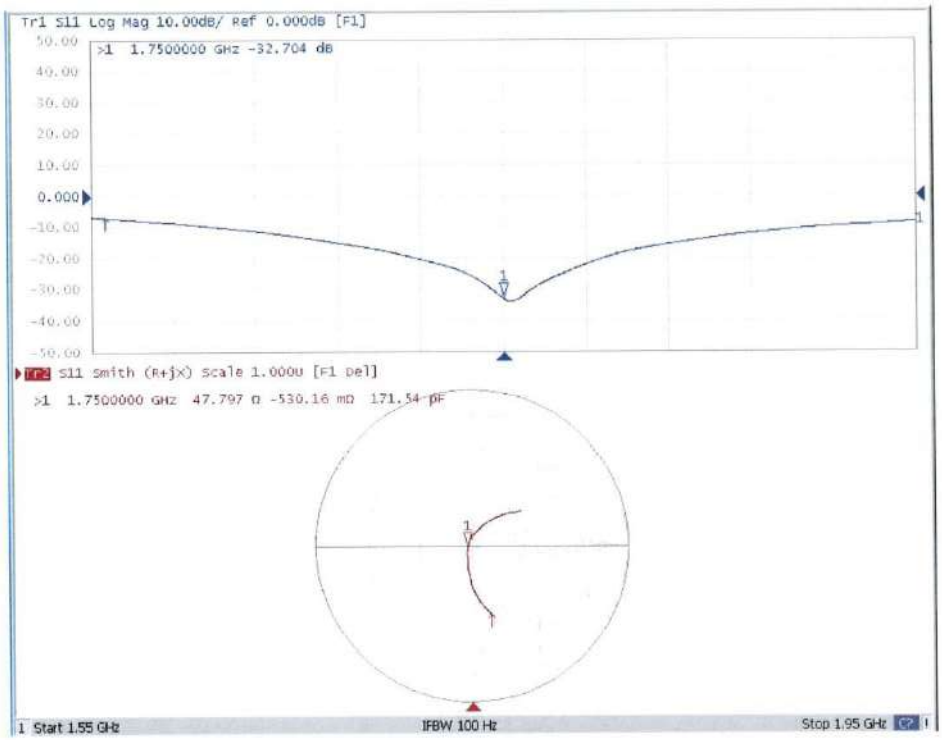

Certificate No: 24J02Z000388 Page 6 of 6

F.10 1950 MHzDipole

In Collaboration with
s p e a g
CALIBRATION LABORATORY
Add: No.52 HuaYuanBei Road, Haidian District, Beijing, 100191
Tel: +86-10-62304633-2117
E-mail: cttl@chinattl.com http://www.caict.ac.cn

中国认可 国际互认 校准 CALIBRATION CNAS L0570

Client: **baluntek** **Certificate No: 24J02Z000458**

CALIBRATION CERTIFICATE

Object	D1950V3 - SN: 1240
Calibration Procedure(s)	FF-Z11-003-01 Calibration Procedures for dipole validation kits
Calibration date:	August 22, 2024

This calibration Certificate documents the traceability to national standards, which realize the physical units of measurements (SI). The measurements and the uncertainties with confidence probability are given on the following pages and are part of the certificate.

All calibrations have been conducted in the closed laboratory facility: environment temperature (22±3)°C and humidity<70%.

Calibration Equipment used (M&TE critical for calibration)

Primary Standards	ID #	Cal Date (Calibrated by, Certificate No.)	Scheduled Calibration
Power Meter NRP2	106276	17-May-24 (CTTL, No. J24X04107)	May-25
Power sensor NRP6A	101369	17-May-24 (CTTL, No. J24X04107)	May-25
Reference Probe EX3DV4	SN 7464	22-Jan-24(SPEAG, No. EX-7464_Jan24)	Jan-25
DAE4	SN 1556	03-Jan-24(CTTL-SPEAG, No.24J02Z80002)	Jan-25
Secondary Standards	**ID #**	**Cal Date (Calibrated by, Certificate No.)**	**Scheduled Calibration**
Signal Generator E4438C	MY49071430	25-Dec-23 (CTTL, No. J23X13426)	Dec-24
NetworkAnalyzer E5071C	MY46110673	25-Dec-23 (CTTL, No. J23X13425)	Dec-24
OCP DAK-3.5(weighted)	1040	22-Jan-24(SPEAG, No.OCP-DAK3.5-1040_Jan24)	Jan-25

	Name	Function	Signature
Calibrated by:	Zhao Jing	SAR Test Engineer	
Reviewed by:	Lin Jun	SAR Test Engineer	
Approved by:	Qi Dianyuan	SAR Project Leader	

Issued: August 30, 2024

This calibration certificate shall not be reproduced except in full without written approval of the laboratory.

Certificate No: 24J02Z000458 Page 1 of 6

In Collaboration with
s p e a g
CALIBRATION LABORATORY

CAICT

Add: No.52 HuaYuanBei Road, Haidian District, Beijing, 100191, China
Tel: +86-10-62304633-2117
E-mail: cttl@chinattl.com http://www.caict.ac.cn

Glossary:

TSL	tissue simulating liquid
ConvF	sensitivity in TSL / NORMx,y,z
N/A	not applicable or not measured

Calibration is Performed According to the Following Standards:

a) IEC/IEEE 62209-1528, "Measurement Procedure for The Assessment of Specific Absorption Rate of Human Exposure to Radio Frequency Fields from Hand-held and Body-mounted Wireless Communication Devices- Part 1528: Human Models, Instrumentation and Procedures (Frequency range of 4 MHz to 10 GHz)", October 2020

b) KDB 865664, "SAR Measurement Requirements for 100 MHz to 6 GHz"

Additional Documentation:

c) DASY4/5 System Handbook

Methods Applied and Interpretation of Parameters:

- *Measurement Conditions:* Further details are available from the Validation Report at the end of the certificate. All figures stated in the certificate are valid at the frequency indicated.
- *Antenna Parameters with TSL:* The dipole is mounted with the spacer to position its feed point exactly below the center marking of the flat phantom section, with the arms oriented parallel to the body axis.
- *Feed Point Impedance and Return Loss:* These parameters are measured with the dipole positioned under the liquid filled phantom. The impedance stated is transformed from the measurement at the SMA connector to the feed point. The Return Loss ensures low reflected power. No uncertainty required.
- *Electrical Delay:* One-way delay between the SMA connector and the antenna feed point. No uncertainty required.
- *SAR measured:* SAR measured at the stated antenna input power.
- *SAR normalized:* SAR as measured, normalized to an input power of 1 W at the antenna connector.
- *SAR for nominal TSL parameters:* The measured TSL parameters are used to calculate the nominal SAR result.

The reported uncertainty of measurement is stated as the standard uncertainty of Measurement multiplied by the coverage factor k=2, which for a normal distribution Corresponds to a coverage probability of approximately 95%.

In Collaboration with
s p e a g
CALIBRATION LABORATORY

CAICT

Add: No.52 HuaYuanBei Road, Haidian District, Beijing, 100191, China
Tel: +86-10-62304633-2117
E-mail: cttl@chinattl.com http://www.caict.ac.cn

Measurement Conditions

DASY system configuration, as far as not given on page 1.

DASY Version	DASY52	52.10.4
Extrapolation	Advanced Extrapolation	
Phantom	Triple Flat Phantom 5.1C	
Distance Dipole Center - TSL	10 mm	with Spacer
Zoom Scan Resolution	dx, dy, dz = 5 mm	
Frequency	1950 MHz ± 1 MHz	

Head TSL parameters

The following parameters and calculations were applied.

	Temperature	**Permittivity**	**Conductivity**
Nominal Head TSL parameters	22.0 °C	40.0	1.40 mho/m
Measured Head TSL parameters	(22.0 ± 0.2) °C	41.1 ± 6 %	1.41 mho/m ± 6 %
Head TSL temperature change during test	<1.0 °C	----	----

SAR result with Head TSL

SAR averaged over 1 cm^3 (1 g) of Head TSL	Condition	
SAR measured	250 mW input power	10.4 W/kg
SAR for nominal Head TSL parameters	normalized to 1W	**41.7 W/kg ± 18.8 % (k=2)**
SAR averaged over 10 cm^3 (10 g) of Head TSL	Condition	
SAR measured	250 mW input power	5.42 W/kg
SAR for nominal Head TSL parameters	normalized to 1W	**21.7 W/kg ± 18.7 % (k=2)**

In Collaboration with
s p e a g
CALIBRATION LABORATORY

CAICT

Add: No.52 HuaYuanBei Road, Haidian District, Beijing, 100191, China
Tel: +86-10-62304633-2117
E-mail: cttl@chinattl.com http://www.caict.ac.cn

Appendix (Additional assessments outside the scope of CNAS L0570)

Antenna Parameters with Head TSL

Impedance, transformed to feed point	44.7Ω+ 1.82jΩ
Return Loss	- 24.5dB

General Antenna Parameters and Design

Electrical Delay (one direction)	1.099 ns

After long term use with 100W radiated power, only a slight warming of the dipole near the feed-point can be measured.

The dipole is made of standard semirigid coaxial cable. The center conductor of the feeding line is directly connected to the second arm of the dipole. The antenna is therefore short-circuited for DC-signals. On some of the dipoles, small end caps are added to the dipole arms in order to improve matching when loaded according to the position as explained in the "Measurement Conditions" paragraph. The SAR data are not affected by this change. The overall dipole length is still according to the Standard.
No excessive force must be applied to the dipole arms, because they might bend or the soldered connections near the feed-point may be damaged.

Additional EUT Data

Manufactured by	SPEAG

In Collaboration with
s p e a g
CALIBRATION LABORATORY

CAICT

Add: No.52 HuaYuanBei Road, Haidian District, Beijing, 100191, China
Tel: +86-10-62304633-2117
E-mail: cttl@chinattl.com http://www.caict.ac.cn

DASY5 Validation Report for Head TSL Date: 2024-08-22

Test Laboratory: CTTL, Beijing, China

DUT: Dipole 1950 MHz; Type: D1950V2; Serial: D1950V2 - SN: 1240

Communication System: UID 0, CW; Frequency: 1950 MHz; Duty Cycle: 1:1

Medium parameters used: f = 1950 MHz; σ = 1.408 S/m; ε_r = 41.07; ρ = 1000 kg/m^3

Phantom section: Right Section

Measurement Standard: DASY5 (IEEE/IEC/ANSI C63.19-2007)

DASY5 Configuration:

- Probe: EX3DV4 - SN7464; ConvF(7.57, 7.71, 7.88) @ 1950 MHz; Calibrated: 2024-01-22
- Sensor-Surface: 1.4mm (Mechanical Surface Detection)
- Electronics: DAE4 Sn1556; Calibrated: 2024-01-03
- Phantom: MFP_V5.1C (20deg probe tilt); Type: QD 000 P51 Cx; Serial: 1062
- DASY52 52.10.4(1535); SEMCAD X 14.6.14(7501)

Dipole Calibration/Zoom Scan (7x7x7) (7x7x7)/Cube 0: Measurement grid: dx=5mm, dy=5mm, dz=5mm

Reference Value = 99.93 V/m; Power Drift = 0.01 dB

Peak SAR (extrapolated) = 19.0 W/kg

SAR(1 g) = 10.4 W/kg; SAR(10 g) = 5.42 W/kg

Smallest distance from peaks to all points 3 dB below = 9 mm

Ratio of SAR at M2 to SAR at M1 = 55.8%

Maximum value of SAR (measured) = 16.2 W/kg

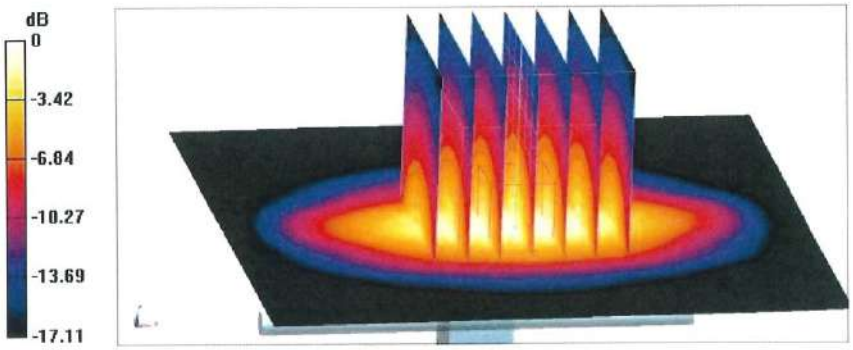

0 dB = 16.2 W/kg = 12.10 dBW/kg

In Collaboration with
s p e a g
CALIBRATION LABORATORY

CAICT

Add: No.52 HuaYuanBei Road, Haidian District, Beijing, 100191, China
Tel: +86-10-62304633-2117
E-mail: cttl@chinattl.com http://www.caict.ac.cn

Impedance Measurement Plot for Head TSL

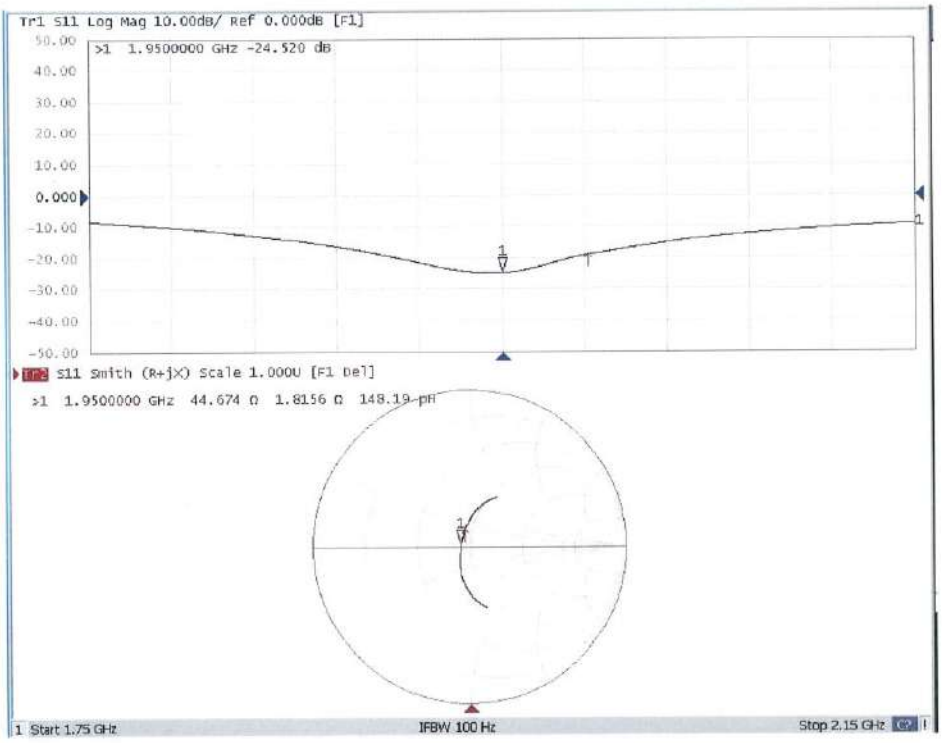

F.11 2450 MHz Dipole

In Collaboration with
speag
CALIBRATION LABORATORY
Add: No.52 HuaYuanBei Road, Haidian District, Beijing, 100191
Tel: +86-10-62304633-2117
E-mail: cttl@chinattl.com http://www.caict.ac.cn

Client Baluntek

Certificate No: 24J02Z000389

CALIBRATION CERTIFICATE

Object	D2450V2 - SN: 952
Calibration Procedure(s)	FF-Z11-003-01 Calibration Procedures for dipole validation kits
Calibration date:	May 7, 2024

This calibration Certificate documents the traceability to national standards, which realize the physical units of measurements (SI). The measurements and the uncertainties with confidence probability are given on the following pages and are part of the certificate.

All calibrations have been conducted in the closed laboratory facility: environment temperature (22±3)℃ and humidity<70%.

Calibration Equipment used (M&TE critical for calibration)

Primary Standards	ID #	Cal Date (Calibrated by, Certificate No.)	Scheduled Calibration
Power Meter NRP2	106276	15-May-23 (CTTL, No.J23X04183)	May-24
Power sensor NRP6A	101369	15-May-23 (CTTL, No.J23X04183)	May-24
ReferenceProbe EX3DV4	SN 3846	31-May-23(SPEAG,No.EX-3846_May23)	May-24
DAE4	SN 1556	03-Jan-24(CTTL-SPEAG,No.24J02Z80002)	Jan-25
Secondary Standards	**ID #**	**Cal Date (Calibrated by, Certificate No.)**	**Scheduled Calibration**
Signal Generator E4438C	MY49071430	25-Dec-23 (CTTL, No. J23X13426)	Dec-24
NetworkAnalyzer E5071C	MY46110673	25-Dec-23 (CTTL, No. J23X13425)	Dec-24
OCP DAK-3.5(weighted)	1040	22-Jan-24(SPEAG, No.OCP-DAK3.5-1040_Jan24)	Jan-25

	Name	Function	Signature
Calibrated by:	Zhao Jing	SAR Test Engineer	
Reviewed by:	Lin Jun	SAR Test Engineer	
Approved by:	Qi Dianyuan	SAR Project Leader	

Issued: May 13, 2024

This calibration certificate shall not be reproduced except in full without written approval of the laboratory.

Certificate No: 24J02Z000389 Page 1 of 6

In Collaboration with
s p e a g
CALIBRATION LABORATORY

CAICT

Add: No.52 HuaYuanBei Road, Haidian District, Beijing, 100191, China
Tel: +86-10-62304633-2117
E-mail: cttl@chinattl.com http://www.caict.ac.cn

Glossary:

TSL	tissue simulating liquid
ConvF	sensitivity in TSL / NORMx,y,z
N/A	not applicable or not measured

Calibration is Performed According to the Following Standards:

a) IEC/IEEE 62209-1528, "Measurement Procedure for The Assessment of Specific Absorption Rate of Human Exposure to Radio Frequency Fields from Hand-held and Body-mounted Wireless Communication Devices- Part 1528: Human Models, Instrumentation and Procedures (Frequency range of 4 MHz to 10 GHz)", October 2020

b) KDB 865664, "SAR Measurement Requirements for 100 MHz to 6 GHz"

Additional Documentation:

c) DASY4/5 System Handbook

Methods Applied and Interpretation of Parameters:

- *Measurement Conditions:* Further details are available from the Validation Report at the end of the certificate. All figures stated in the certificate are valid at the frequency indicated.
- *Antenna Parameters with TSL:* The dipole is mounted with the spacer to position its feed point exactly below the center marking of the flat phantom section, with the arms oriented parallel to the body axis.
- *Feed Point Impedance and Return Loss:* These parameters are measured with the dipole positioned under the liquid filled phantom. The impedance stated is transformed from the measurement at the SMA connector to the feed point. The Return Loss ensures low reflected power. No uncertainty required.
- *Electrical Delay:* One-way delay between the SMA connector and the antenna feed point. No uncertainty required.
- *SAR measured:* SAR measured at the stated antenna input power.
- *SAR normalized:* SAR as measured, normalized to an input power of 1 W at the antenna connector.
- *SAR for nominal TSL parameters:* The measured TSL parameters are used to calculate the nominal SAR result.

The reported uncertainty of measurement is stated as the standard uncertainty of Measurement multiplied by the coverage factor k=2, which for a normal distribution Corresponds to a coverage probability of approximately 95%.

In Collaboration with
s p e a g
CALIBRATION LABORATORY

CAICT

Add: No.52 HuaYuanBei Road, Haidian District, Beijing, 100191, China
Tel: +86-10-62304633-2117
E-mail: cttl@chinattl.com http://www.caict.ac.cn

Measurement Conditions

DASY system configuration, as far as not given on page 1.

DASY Version	DASY52	52.10.4
Extrapolation	Advanced Extrapolation	
Phantom	Triple Flat Phantom 5.1C	
Distance Dipole Center - TSL	10 mm	with Spacer
Zoom Scan Resolution	dx, dy, dz = 5 mm	
Frequency	2450 MHz ± 1 MHz	

Head TSL parameters

The following parameters and calculations were applied.

	Temperature	**Permittivity**	**Conductivity**
Nominal Head TSL parameters	22.0 °C	39.2	1.80 mho/m
Measured Head TSL parameters	(22.0 ± 0.2) °C	39.5 ± 6 %	1.79 mho/m ± 6 %
Head TSL temperature change during test	<1.0 °C	----	----

SAR result with Head TSL

SAR averaged over 1 cm^3 (1 g) of Head TSL	Condition	
SAR measured	250 mW input power	13.1 W/kg
SAR for nominal Head TSL parameters	normalized to 1W	**52.6 W/kg ± 18.8 % (*k*=2)**
SAR averaged over 10 cm^3 (10 g) of Head TSL	Condition	
SAR measured	250 mW input power	6.15 W/kg
SAR for nominal Head TSL parameters	normalized to 1W	**24.7 W/kg ± 18.7 % (*k*=2)**

In Collaboration with
s p e a g
CALIBRATION LABORATORY

CAICT

Add: No.52 HuaYuanBei Road, Haidian District, Beijing, 100191, China
Tel: +86-10-62304633-2117
E-mail: cttl@chinattl.com http://www.caict.ac.cn

Appendix (Additional assessments outside the scope of CNAS L0570)

Antenna Parameters with Head TSL

Impedance, transformed to feed point	51.6Ω+ 3.78jΩ
Return Loss	- 27.9dB

General Antenna Parameters and Design

Electrical Delay (one direction)	1.068 ns

After long term use with 100W radiated power, only a slight warming of the dipole near the feed-point can be measured.

The dipole is made of standard semirigid coaxial cable. The center conductor of the feeding line is directly connected to the second arm of the dipole. The antenna is therefore short-circuited for DC-signals. On some of the dipoles, small end caps are added to the dipole arms in order to improve matching when loaded according to the position as explained in the "Measurement Conditions" paragraph. The SAR data are not affected by this change. The overall dipole length is still according to the Standard.
No excessive force must be applied to the dipole arms, because they might bend or the soldered connections near the feed-point may be damaged.

Additional EUT Data

Manufactured by	SPEAG

In Collaboration with
s p e a g
CALIBRATION LABORATORY

CAICT

Add: No.52 HuaYuanBei Road, Haidian District, Beijing, 100191, China
Tel: +86-10-62304633-2117
E-mail: cttl@chinattl.com http://www.caict.ac.cn

DASY5 Validation Report for Head TSL Date: 2024-05-07

Test Laboratory: CTTL, Beijing, China

DUT: Dipole 2450 MHz; Type: D2450V2; Serial: D2450V2 - SN: 952

Communication System: UID 0, CW; Frequency: 2450 MHz

Medium parameters used: f = 2450 MHz; σ = 1.792 S/m; ε_r = 39.47; ρ = 1000 kg/m^3

Phantom section: Right Section

Measurement Standard: DASY5 (IEEE/IEC/ANSI C63.19-2007)

DASY5 Configuration:

- Probe: EX3DV4 - SN3846; ConvF(6.8, 7.06, 7.55) @ 2450 MHz; Calibrated: 2023-05-31
- Sensor-Surface: 1.4mm (Mechanical Surface Detection)
- Electronics: DAE4 Sn1556; Calibrated: 2024-01-03
- Phantom: MFP_V5.1C (20deg probe tilt); Type: QD 000 P51 Cx; Serial: 1062
- DASY52 52.10.4(1535); SEMCAD X 14.6.14(7501)

Dipole Calibration/Zoom Scan (7x7x7) (7x7x7)/Cube 0: Measurement grid: dx=5mm, dy=5mm, dz=5mm

Reference Value = 106.6 V/m; Power Drift = 0.05 dB

Peak SAR (extrapolated) = 25.9 W/kg

SAR(1 g) = 13.1 W/kg; SAR(10 g) = 6.15 W/kg

Smallest distance from peaks to all points 3 dB below = 9 mm

Ratio of SAR at M2 to SAR at M1 = 51.3%

Maximum value of SAR (measured) = 21.5 W/kg

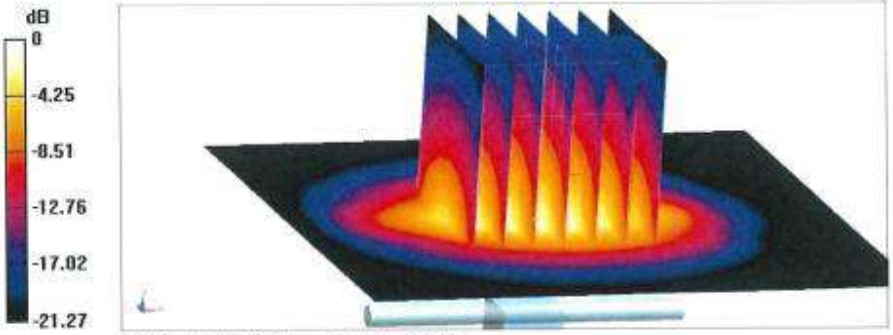

0 dB = 21.5 W/kg = 13.32 dBW/kg

In Collaboration with
s p e a g
CALIBRATION LABORATORY

CAICT

Add: No.52 HuaYuanBei Road, Haidian District, Beijing, 100191, China
Tel: +86-10-62304633-2117
E-mail: cttl@chinattl.com http://www.caict.ac.cn

Impedance Measurement Plot for Head TSL

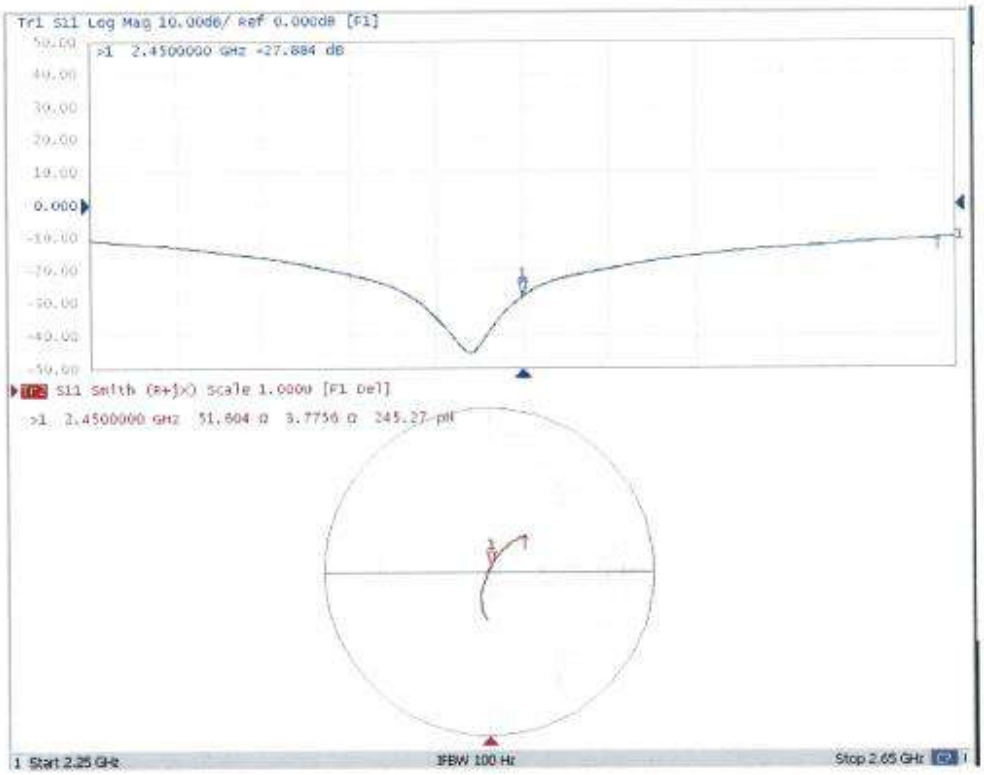

F.12 2600 MHz Dipole

In Collaboration with
s p e a g
CALIBRATION LABORATORY

CNAS 中国认可 国际互认 校准 CALIBRATION CNAS L0570

CAICT

Add: No.52 HuaYuanBei Road, Haidian District, Beijing, 100191
Tel: +86-10-62304633-2117
E-mail: emf@caict.ac.cn http://www.caict.ac.cn

Client: Baluntek **Certificate No: 24J02Z000390**

CALIBRATION CERTIFICATE

Object	D2600V2 - SN: 1095
Calibration Procedure(s)	FF-Z11-003-01 Calibration Procedures for dipole validation kits
Calibration date:	May 8, 2024

This calibration Certificate documents the traceability to national standards, which realize the physical units of measurements (SI). The measurements and the uncertainties with confidence probability are given on the following pages and are part of the certificate.

All calibrations have been conducted in the closed laboratory facility: environment temperature (22±3)°C and humidity<70%.

Calibration Equipment used (M&TE critical for calibration)

Primary Standards	ID #	Cal Date (Calibrated by, Certificate No.)	Scheduled Calibration
Power Meter NRP2	106276	15-May-23 (CTTL, No.J23X04183)	May-24
Power sensor NRP6A	101369	15-May-23 (CTTL, No.J23X04183)	May-24
ReferenceProbe EX3DV4	SN 3846	31-May-23(SPEAG,No.EX-3846_May23)	May-24
DAE4	SN 1556	03-Jan-24(CTTL-SPEAG,No.24J02Z80002)	Jan-25
Secondary Standards	**ID #**	**Cal Date (Calibrated by, Certificate No.)**	**Scheduled Calibration**
Signal Generator E4438C	MY49071430	25-Dec-23 (CTTL, No. J23X13426)	Dec-24
NetworkAnalyzer E5071C	MY46110673	25-Dec-23 (CTTL, No. J23X13425)	Dec-24
OCP DAK-3.5(weighted)	1040	22-Jan-24(SPEAG, No.OCP-DAK3.5-1040_Jan24)	Jan-25

	Name	Function	Signature
Calibrated by:	Zhao Jing	SAR Test Engineer	
Reviewed by:	Lin Jun	SAR Test Engineer	
Approved by:	Qi Dianyuan	SAR Project Leader	

Issued: May 13, 2024

This calibration certificate shall not be reproduced except in full without written approval of the laboratory.

In Collaboration with
s p e a g
CALIBRATION LABORATORY

CAICT

Add: No.52 HuaYuanBei Road, Haidian District, Beijing, 100191, China
Tel: +86-10-62304633-2117
E-mail: emf@caict.ac.cn http://www.caict.ac.cn

Glossary:

TSL	tissue simulating liquid
ConvF	sensitivity in TSL / NORMx,y,z
N/A	not applicable or not measured

Calibration is Performed According to the Following Standards:

a) IEC/IEEE 62209-1528, "Measurement Procedure for The Assessment of Specific Absorption Rate of Human Exposure to Radio Frequency Fields from Hand-held and Body-mounted Wireless Communication Devices- Part 1528: Human Models, Instrumentation and Procedures (Frequency range of 4 MHz to 10 GHz)", October 2020

b) KDB 865664, "SAR Measurement Requirements for 100 MHz to 6 GHz"

Additional Documentation:

c) DASY4/5 System Handbook

Methods Applied and Interpretation of Parameters:

- *Measurement Conditions:* Further details are available from the Validation Report at the end of the certificate. All figures stated in the certificate are valid at the frequency indicated.
- *Antenna Parameters with TSL:* The dipole is mounted with the spacer to position its feed point exactly below the center marking of the flat phantom section, with the arms oriented parallel to the body axis.
- *Feed Point Impedance and Return Loss:* These parameters are measured with the dipole positioned under the liquid filled phantom. The impedance stated is transformed from the measurement at the SMA connector to the feed point. The Return Loss ensures low reflected power. No uncertainty required.
- *Electrical Delay:* One-way delay between the SMA connector and the antenna feed point. No uncertainty required.
- *SAR measured:* SAR measured at the stated antenna input power.
- *SAR normalized:* SAR as measured, normalized to an input power of 1 W at the antenna connector.
- *SAR for nominal TSL parameters:* The measured TSL parameters are used to calculate the nominal SAR result.

The reported uncertainty of measurement is stated as the standard uncertainty of Measurement multiplied by the coverage factor k=2, which for a normal distribution Corresponds to a coverage probability of approximately 95%.

In Collaboration with
s p e a g
CALIBRATION LABORATORY

CAICT

Add: No.52 HuaYuanBei Road, Haidian District, Beijing, 100191, China
Tel: +86-10-62304633-2117
E-mail: emf@caict.ac.cn http://www.caict.ac.cn

Measurement Conditions

DASY system configuration, as far as not given on page 1.

DASY Version	DASY52	52.10.4
Extrapolation	Advanced Extrapolation	
Phantom	Triple Flat Phantom 5.1C	
Distance Dipole Center - TSL	10 mm	with Spacer
Zoom Scan Resolution	dx, dy, dz = 5 mm	
Frequency	2600 MHz ± 1 MHz	

Head TSL parameters

The following parameters and calculations were applied.

	Temperature	**Permittivity**	**Conductivity**
Nominal Head TSL parameters	22.0 °C	39.0	1.96 mho/m
Measured Head TSL parameters	(22.0 ± 0.2) °C	38.5 ± 6 %	1.99 mho/m ± 6 %
Head TSL temperature change during test	<1.0 °C	----	----

SAR result with Head TSL

SAR averaged over 1 cm^3 (1 g) of Head TSL	Condition	
SAR measured	250 mW input power	14.1 W/kg
SAR for nominal Head TSL parameters	normalized to 1W	**55.9 W/kg ± 18.8 % (*k*=2)**
SAR averaged over 10 cm^3 (10 g) of Head TSL	Condition	
SAR measured	250 mW input power	6.37 W/kg
SAR for nominal Head TSL parameters	normalized to 1W	**25.4 W/kg ± 18.7 % (*k*=2)**

In Collaboration with
s p e a g
CALIBRATION LABORATORY

CAICT

Add: No.52 HuaYuanBei Road, Haidian District, Beijing, 100191, China
Tel: +86-10-62304633-2117
E-mail: emf@caict.ac.cn http://www.caict.ac.cn

Appendix (Additional assessments outside the scope of CNAS L0570)

Antenna Parameters with Head TSL

Impedance, transformed to feed point	48.2Ω- 4.78jΩ
Return Loss	- 25.7dB

General Antenna Parameters and Design

Electrical Delay (one direction)	1.057 ns

After long term use with 100W radiated power, only a slight warming of the dipole near the feed-point can be measured.

The dipole is made of standard semirigid coaxial cable. The center conductor of the feeding line is directly connected to the second arm of the dipole. The antenna is therefore short-circuited for DC-signals. On some of the dipoles, small end caps are added to the dipole arms in order to improve matching when loaded according to the position as explained in the "Measurement Conditions" paragraph. The SAR data are not affected by this change. The overall dipole length is still according to the Standard.
No excessive force must be applied to the dipole arms, because they might bend or the soldered connections near the feed-point may be damaged.

Additional EUT Data

Manufactured by	SPEAG

In Collaboration with
s p e a g
CALIBRATION LABORATORY

CAICT

Add: No.52 HuaYuanBei Road, Haidian District, Beijing, 100191, China
Tel: +86-10-62304633-2117
E-mail: emf@caict.ac.cn http://www.caict.ac.cn

DASY5 Validation Report for Head TSL Date: 2024-05-08

Test Laboratory: CTTL, Beijing, China

DUT: Dipole 2600 MHz; Type: D2600V2; Serial: D2600V2 - SN: 1095

Communication System: UID 0, CW; Frequency: 2600 MHz

Medium parameters used: f = 2600 MHz; σ = 1.985 S/m; ε_r = 38.52; ρ = 1000 kg/m^3

Phantom section: Right Section

Measurement Standard: DASY5 (IEEE/IEC/ANSI C63.19-2007)

DASY5 Configuration:

- Probe: EX3DV4 - SN3846; ConvF(6.72, 7.04, 7.5) @ 2600 MHz; Calibrated: 2023-05-31
- Sensor-Surface: 1.4mm (Mechanical Surface Detection)
- Electronics: DAE4 Sn1556; Calibrated: 2024-01-03
- Phantom: MFP_V5.1C (20deg probe tilt); Type: QD 000 P51 Cx; Serial: 1062
- DASY52 52.10.4(1535); SEMCAD X 14.6.14(7501)

Dipole Calibration/Zoom Scan (7x7x7) (7x7x7)/Cube 0: Measurement grid: dx=5mm, dy=5mm, dz=5mm

Reference Value = 96.20 V/m; Power Drift = -0.03 dB

Peak SAR (extrapolated) = 29.2 W/kg

SAR(1 g) = 14.1 W/kg; SAR(10 g) = 6.37 W/kg

Smallest distance from peaks to all points 3 dB below = 8.9 mm

Ratio of SAR at M2 to SAR at M1 = 49.4%

Maximum value of SAR (measured) = 23.7 W/kg

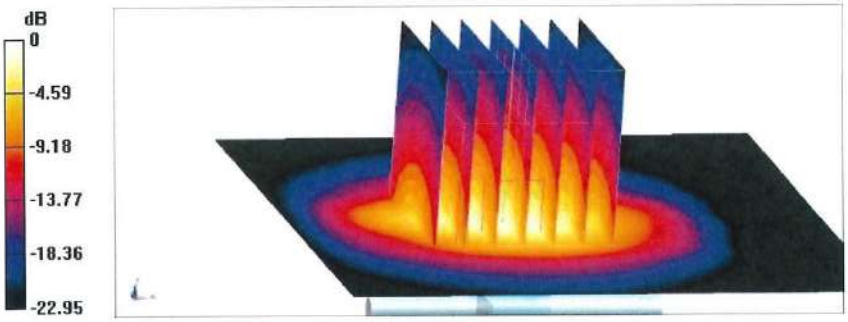

0 dB = 23.7 W/kg = 13.75 dBW/kg

In Collaboration with
s p e a g
CALIBRATION LABORATORY

CAICT

Add: No.52 HuaYuanBei Road, Haidian District, Beijing, 100191, China
Tel: +86-10-62304633-2117
E-mail: emf@caict.ac.cn http://www.caict.ac.cn

Impedance Measurement Plot for Head TSL

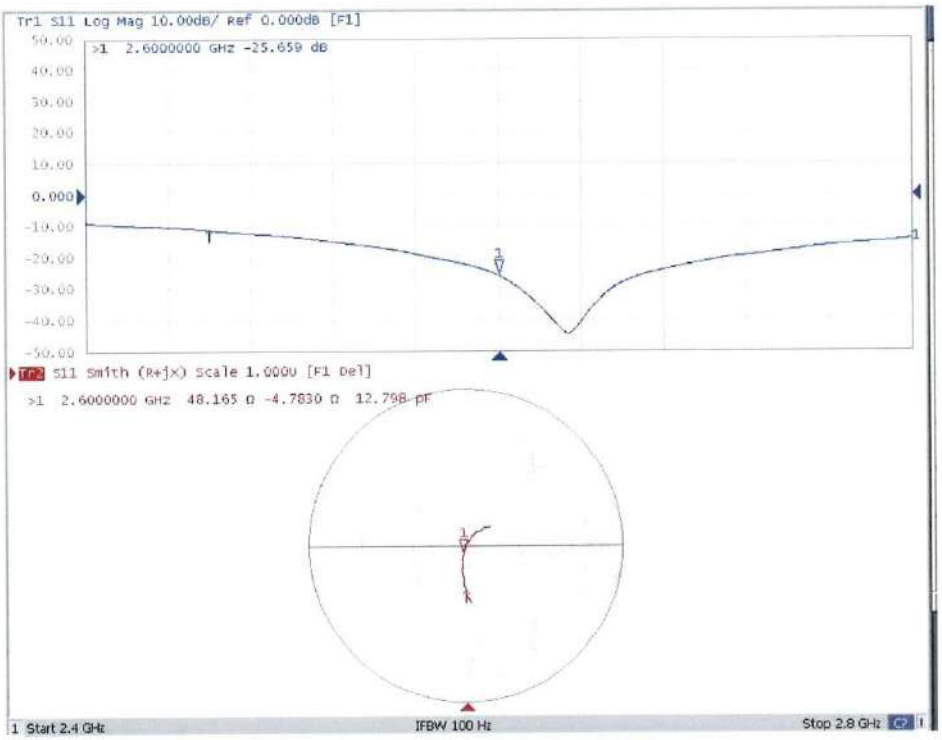

Certificate No: 24J02Z000390 Page 6 of 6

F.13 3.5GHz Dipole

In Collaboration with
s p e a g
CALIBRATION LABORATORY

Add: No.52 HuaYuanBei Road, Haidian District, Beijing, 100191
Tel: +86-10-62304633-2117
E-mail: emf@caict.ac.cn http://www.caict.ac.cn

中国认可
国际互认
校准
CALIBRATION
CNAS L0570

Client baluntek Certificate No: 24J02Z000459

CALIBRATION CERTIFICATE

Object	D3500V2 - SN: 1129
Calibration Procedure(s)	FF-Z11-003-01 Calibration Procedures for dipole validation kits
Calibration date:	July 19, 2024

This calibration Certificate documents the traceability to national standards, which realize the physical units of measurements (SI). The measurements and the uncertainties with confidence probability are given on the following pages and are part of the certificate.

All calibrations have been conducted in the closed laboratory facility: environment temperature (22±3)°C and humidity<70%.

Calibration Equipment used (M&TE critical for calibration)

Primary Standards	ID #	Cal Date (Calibrated by, Certificate No.)	Scheduled Calibration
Power Meter NRP2	106276	17-May-24 (CTTL, No. J24X04107)	May-25
Power sensor NRP6A	101369	17-May-24 (CTTL, No. J24X04107)	May-25
Reference Probe EX3DV4	SN 7464	22-Jan-24(SPEAG, No. EX-7464_Jan24)	Jan-25
DAE4	SN 1556	03-Jan-24(CTTL-SPEAG, No.24J02Z80002)	Jan-25
Secondary Standards	**ID #**	**Cal Date (Calibrated by, Certificate No.)**	**Scheduled Calibration**
Signal Generator E4438C	MY49071430	25-Dec-23 (CTTL, No. J23X13426)	Dec-24
NetworkAnalyzer E5071C	MY46110673	25-Dec-23 (CTTL, No. J23X13425)	Dec-24
OCP DAK-3.5(weighted)	1040	22-Jan-24(SPEAG, No.OCP-DAK3.5-1040_Jan24)	Jan-25

	Name	Function	Signature
Calibrated by:	Zhao Jing	SAR Test Engineer	
Reviewed by:	Lin Jun	SAR Test Engineer	
Approved by:	Qi Dianyuan	SAR Project Leader	

Issued: July 26, 2024

This calibration certificate shall not be reproduced except in full without written approval of the laboratory.

Certificate No: 24J02Z000459 Page 1 of 7

In Collaboration with
s p e a g
CALIBRATION LABORATORY

CAICT

Add: No.52 HuaYuanBei Road, Haidian District, Beijing, 100191, China
Tel: +86-10-62304633-2117
E-mail: emf@caict.ac.cn http://www.caict.ac.cn

Glossary:

TSL	tissue simulating liquid
ConvF	sensitivity in TSL / NORMx,y,z
N/A	not applicable or not measured

Calibration is Performed According to the Following Standards:

a) IEC/IEEE 62209-1528, "Measurement Procedure for The Assessment of Specific Absorption Rate of Human Exposure to Radio Frequency Fields from Hand-held and Body-mounted Wireless Communication Devices- Part 1528: Human Models, Instrumentation and Procedures (Frequency range of 4 MHz to 10 GHz)", October 2020

b) KDB 865664, "SAR Measurement Requirements for 100 MHz to 6 GHz"

Additional Documentation:

c) DASY4/5 System Handbook

Methods Applied and Interpretation of Parameters:

- *Measurement Conditions:* Further details are available from the Validation Report at the end of the certificate. All figures stated in the certificate are valid at the frequency indicated.
- *Antenna Parameters with TSL:* The dipole is mounted with the spacer to position its feed point exactly below the center marking of the flat phantom section, with the arms oriented parallel to the body axis.
- *Feed Point Impedance and Return Loss:* These parameters are measured with the dipole positioned under the liquid filled phantom. The impedance stated is transformed from the measurement at the SMA connector to the feed point. The Return Loss ensures low reflected power. No uncertainty required.
- *Electrical Delay:* One-way delay between the SMA connector and the antenna feed point. No uncertainty required.
- *SAR measured:* SAR measured at the stated antenna input power.
- *SAR normalized:* SAR as measured, normalized to an input power of 1 W at the antenna connector.
- *SAR for nominal TSL parameters:* The measured TSL parameters are used to calculate the nominal SAR result.

The reported uncertainty of measurement is stated as the standard uncertainty of Measurement multiplied by the coverage factor k=2, which for a normal distribution Corresponds to a coverage probability of approximately 95%.

In Collaboration with
s p e a g
CALIBRATION LABORATORY

CAICT

Add: No.52 HuaYuanBei Road, Haidian District, Beijing, 100191, China
Tel: +86-10-62304633-2117
E-mail: emf@caict.ac.cn http://www.caict.ac.cn

Measurement Conditions

DASY system configuration, as far as not given on page 1.

DASY Version	DASY52	52.10.4
Extrapolation	Advanced Extrapolation	
Phantom	Triple Flat Phantom 5.1C	
Distance Dipole Center - TSL	10 mm	with Spacer
Zoom Scan Resolution	dx, dy = 4 mm, dz = 1.4 mm	Graded Ratio = 1.4 (Z direction)
Frequency	3400 MHz ± 1 MHz 3500 MHz ± 1 MHz	

Head TSL parameters at 3400 MHz

The following parameters and calculations were applied.

	Temperature	**Permittivity**	**Conductivity**
Nominal Head TSL parameters	22.0 °C	38.0	2.81 mho/m
Measured Head TSL parameters	(22.0 ± 0.2) °C	38.6 ± 6 %	2.80 mho/m ± 6 %
Head TSL temperature change during test	<1.0 °C	----	----

SAR result with Head TSL at 3400 MHz

SAR averaged over 1 cm^3 (1 g) of Head TSL	Condition	
SAR measured	100 mW input power	6.65 W/kg
SAR for nominal Head TSL parameters	normalized to 1W	**66.8 W/kg ± 24.4 % (*k*=2)**
SAR averaged over 10 cm^3 (10 g) of Head TSL	Condition	
SAR measured	100 mW input power	2.56 W/kg
SAR for nominal Head TSL parameters	normalized to 1W	**25.7 W/kg ± 24.2 % (*k*=2)**

Head TSL parameters at 3500 MHz

The following parameters and calculations were applied.

	Temperature	**Permittivity**	**Conductivity**
Nominal Head TSL parameters	22.0 °C	37.9	2.91 mho/m
Measured Head TSL parameters	(22.0 ± 0.2) °C	38.2 ± 6 %	2.88 mho/m ± 6 %
Head TSL temperature change during test	<1.0 °C	----	----

SAR result with Head TSL at 3500 MHz

SAR averaged over 1 cm^3 (1 g) of Head TSL	Condition	
SAR measured	100 mW input power	6.77 W/kg
SAR for nominal Head TSL parameters	normalized to 1W	**68.0 W/kg ± 24.4 % (*k*=2)**
SAR averaged over 10 cm^3 (10 g) of Head TSL	Condition	
SAR measured	100 mW input power	2.60 W/kg
SAR for nominal Head TSL parameters	normalized to 1W	**26.1 W/kg ± 24.2 % (*k*=2)**

In Collaboration with
s p e a g
CALIBRATION LABORATORY

CAICT

Add: No.52 HuaYuanBei Road, Haidian District, Beijing, 100191, China
Tel: +86-10-62304633-2117
E-mail: emf@caict.ac.cn http://www.caict.ac.cn

Appendix (Additional assessments outside the scope of CNAS L0570)

Antenna Parameters with Head TSL at 3400 MHz

Impedance, transformed to feed point	41.1Ω - 0.40jΩ
Return Loss	- 20.2dB

Antenna Parameters with Head TSL at 3500 MHz

Impedance, transformed to feed point	48.4Ω + 4.18jΩ
Return Loss	- 26.8dB

General Antenna Parameters and Design

Electrical Delay (one direction)	1.040 ns

After long term use with 100W radiated power, only a slight warming of the dipole near the feed-point can be measured.

The dipole is made of standard semirigid coaxial cable. The center conductor of the feeding line is directly connected to the second arm of the dipole. The antenna is therefore short-circuited for DC-signals. On some of the dipoles, small end caps are added to the dipole arms in order to improve matching when loaded according to the position as explained in the "Measurement Conditions" paragraph. The SAR data are not affected by this change. The overall dipole length is still according to the Standard.
No excessive force must be applied to the dipole arms, because they might bend or the soldered connections near the feed-point may be damaged.

Additional EUT Data

Manufactured by	SPEAG

In Collaboration with
s p e a g
CALIBRATION LABORATORY

CAICT

Add: No.52 HuaYuanBei Road, Haidian District, Beijing, 100191, China
Tel: +86-10-62304633-2117
E-mail: emf@caict.ac.cn http://www.caict.ac.cn

DASY5 Validation Report for Head TSL Date: 2024-07-19

Test Laboratory: CTTL, Beijing, China

DUT: Dipole 3500 MHz; Type: D3500V2; Serial: D3500V2 - SN: 1129

Communication System: CW; Frequency: 3400 MHz, CW; Frequency: 3500 MHz,
Medium parameters used: f = 3400 MHz; σ = 2.795 S/m; ε_r = 38.59; ρ = 1000 kg/m^3,
Medium parameters used: f = 3500 MHz; σ = 2.88 S/m; ε_r = 38.24; ρ = 1000 kg/m^3,
Phantom section: Right Section
Measurement Standard: DASY5 (IEEE/IEC/ANSI C63.19-2007)

DASY5 Configuration:

- Probe: EX3DV4 - SN7464; ConvF(6.74, 6.84, 6.97) @ 3400 MHz; ConvF(6.73, 6.82, 6.94) @ 3500 MHz; Calibrated: 2024-01-22
- Sensor-Surface: 1.4mm (Mechanical Surface Detection)
- Electronics: DAE4 Sn1556; Calibrated: 2024-01-03
- Phantom: MFP_V5.1C (20deg probe tilt); Type: QD 000 P51 Cx; Serial: 1062
- DASY52 52.10.4(1535); SEMCAD X 14.6.14(7501)

Dipole Calibration /Pin=100mW, d=10mm, f=3400 MHz/Zoom Scan, dist=1.4mm (8x8x7)/Cube 0: Measurement grid: dx=4mm, dy=4mm, dz=1.4mm
Reference Value = 65.78 V/m; Power Drift = -0.06 dB
Peak SAR (extrapolated) = 16.4 W/kg
SAR(1 g) = 6.65 W/kg; SAR(10 g) = 2.56 W/kg
Smallest distance from peaks to all points 3 dB below = 8 mm
Ratio of SAR at M2 to SAR at M1 = 77.8%
Maximum value of SAR (measured) = 12.1 W/kg

Dipole Calibration /Pin=100mW, d=10mm, f=3500 MHz/Zoom Scan, dist=1.4mm (8x8x7)/Cube 0: Measurement grid: dx=4mm, dy=4mm, dz=1.4mm
Reference Value = 67.72 V/m; Power Drift = -0.04 dB
Peak SAR (extrapolated) = 16.9 W/kg
SAR(1 g) = 6.77 W/kg; SAR(10 g) = 2.6 W/kg
Smallest distance from peaks to all points 3 dB below = 8 mm
Ratio of SAR at M2 to SAR at M1 = 77.1%
Maximum value of SAR (measured) = 12.3 W/kg

In Collaboration with
s p e a g
CALIBRATION LABORATORY

CAICT

Add: No.52 HuaYuanBei Road, Haidian District, Beijing, 100191, China
Tel: +86-10-62304633-2117
E-mail: emf@caict.ac.cn http://www.caict.ac.cn

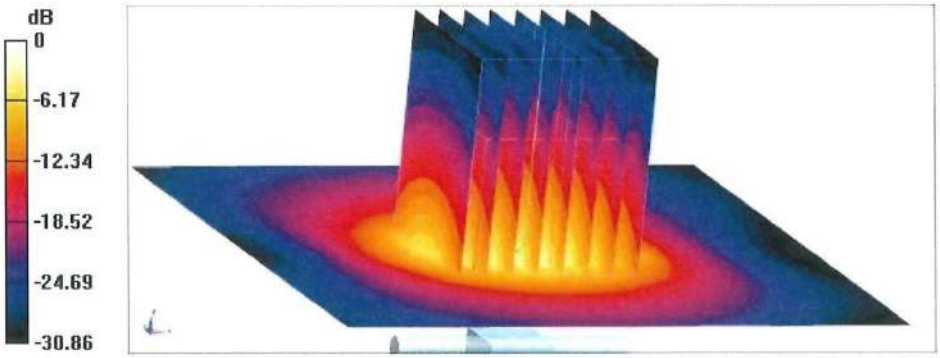

0 dB = 12.3 W/kg = 10.90 dBW/kg

In Collaboration with
s p e a g
CALIBRATION LABORATORY

CAICT

Add: No.52 HuaYuanBei Road, Haidian District, Beijing, 100191, China
Tel: +86-10-62304633-2117
E-mail: emf@caict.ac.cn http://www.caict.ac.cn

Impedance Measurement Plot for Head TSL

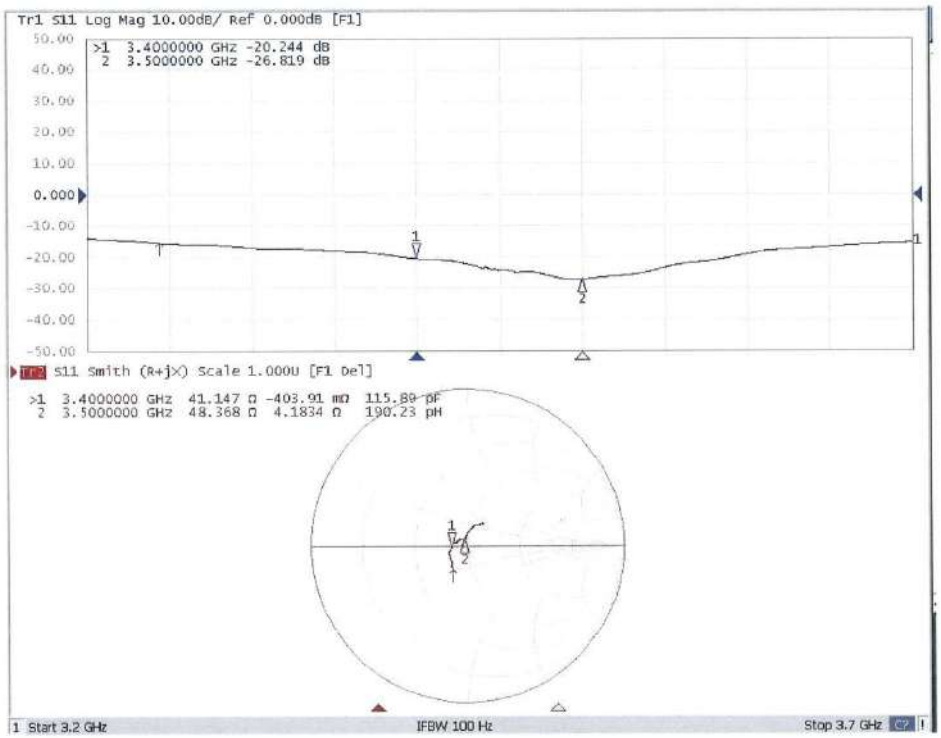

F.14 3.7GHz Dipole

In Collaboration with
s p e a g
CALIBRATION LABORATORY

Add: No.52 HuaYuanBei Road, Haidian District, Beijing, 100191
Tel: +86-10-62304633-2117
E-mail: emf@caict.ac.cn http://www.caict.ac.cn

中国认可
国际互认
校准
CALIBRATION
CNAS L0570

Client baluntek Certificate No: 24J02Z000460

CALIBRATION CERTIFICATE

Object	D3700V2 - SN: 1101
Calibration Procedure(s)	FF-Z11-003-01 Calibration Procedures for dipole validation kits
Calibration date:	July 18, 2024

This calibration Certificate documents the traceability to national standards, which realize the physical units of measurements (SI). The measurements and the uncertainties with confidence probability are given on the following pages and are part of the certificate.

All calibrations have been conducted in the closed laboratory facility: environment temperature (22±3)°C and humidity<70%.

Calibration Equipment used (M&TE critical for calibration)

Primary Standards	ID #	Cal Date (Calibrated by, Certificate No.)	Scheduled Calibration
Power Meter NRP2	106276	17-May-24 (CTTL, No. J24X04107)	May-25
Power sensor NRP6A	101369	17-May-24 (CTTL, No. J24X04107)	May-25
Reference Probe EX3DV4	SN 7464	22-Jan-24(SPEAG, No. EX-7464_Jan24)	Jan-25
DAE4	SN 1556	03-Jan-24(CTTL-SPEAG, No.24J02Z80002)	Jan-25
Secondary Standards	**ID #**	**Cal Date (Calibrated by, Certificate No.)**	**Scheduled Calibration**
Signal Generator E4438C	MY49071430	25-Dec-23 (CTTL, No. J23X13426)	Dec-24
NetworkAnalyzer E5071C	MY46110673	25-Dec-23 (CTTL, No. J23X13425)	Dec-24
OCP DAK-3.5(weighted)	1040	22-Jan-24(SPEAG, No.OCP-DAK3.5-1040_Jan24)	Jan-25

	Name	Function	Signature
Calibrated by:	Zhao Jing	SAR Test Engineer	
Reviewed by:	Lin Jun	SAR Test Engineer	
Approved by:	Qi Dianyuan	SAR Project Leader	

Issued: July 26, 2024

This calibration certificate shall not be reproduced except in full without written approval of the laboratory.

Certificate No: 24J02Z000460 Page 1 of 6

In Collaboration with
s p e a g
CALIBRATION LABORATORY

CAICT

Add: No.52 HuaYuanBei Road, Haidian District, Beijing, 100191, China
Tel: +86-10-62304633-2117
E-mail: emf@caict.ac.cn http://www.caict.ac.cn

Glossary:

TSL	tissue simulating liquid
ConvF	sensitivity in TSL / NORMx,y,z
N/A	not applicable or not measured

Calibration is Performed According to the Following Standards:

a) IEC/IEEE 62209-1528, "Measurement Procedure for The Assessment of Specific Absorption Rate of Human Exposure to Radio Frequency Fields from Hand-held and Body-mounted Wireless Communication Devices- Part 1528: Human Models, Instrumentation and Procedures (Frequency range of 4 MHz to 10 GHz)", October 2020

b) KDB 865664, "SAR Measurement Requirements for 100 MHz to 6 GHz"

Additional Documentation:

c) DASY4/5 System Handbook

Methods Applied and Interpretation of Parameters:

- *Measurement Conditions:* Further details are available from the Validation Report at the end of the certificate. All figures stated in the certificate are valid at the frequency indicated.
- *Antenna Parameters with TSL:* The dipole is mounted with the spacer to position its feed point exactly below the center marking of the flat phantom section, with the arms oriented parallel to the body axis.
- *Feed Point Impedance and Return Loss:* These parameters are measured with the dipole positioned under the liquid filled phantom. The impedance stated is transformed from the measurement at the SMA connector to the feed point. The Return Loss ensures low reflected power. No uncertainty required.
- *Electrical Delay:* One-way delay between the SMA connector and the antenna feed point. No uncertainty required.
- *SAR measured:* SAR measured at the stated antenna input power.
- *SAR normalized:* SAR as measured, normalized to an input power of 1 W at the antenna connector.
- *SAR for nominal TSL parameters:* The measured TSL parameters are used to calculate the nominal SAR result.

The reported uncertainty of measurement is stated as the standard uncertainty of Measurement multiplied by the coverage factor k=2, which for a normal distribution Corresponds to a coverage probability of approximately 95%.

In Collaboration with
s p e a g
CALIBRATION LABORATORY

CAICT

Add: No.52 HuaYuanBei Road, Haidian District, Beijing, 100191, China
Tel: +86-10-62304633-2117
E-mail: emf@caict.ac.cn http://www.caict.ac.cn

Measurement Conditions

DASY system configuration, as far as not given on page 1.

DASY Version	DASY52	52.10.4
Extrapolation	Advanced Extrapolation	
Phantom	Triple Flat Phantom 5.1C	
Distance Dipole Center - TSL	10 mm	with Spacer
Zoom Scan Resolution	dx, dy = 4 mm, dz = 1.4 mm	Graded Ratio = 1.4 (Z direction)
Frequency	3700 MHz ± 1 MHz	

Head TSL parameters at 3700 MHz

The following parameters and calculations were applied.

	Temperature	**Permittivity**	**Conductivity**
Nominal Head TSL parameters	22.0 °C	37.7	3.12 mho/m
Measured Head TSL parameters	(22.0 ± 0.2) °C	38.0 ± 6 %	3.15 mho/m ± 6 %
Head TSL temperature change during test	<1.0 °C	----	----

SAR result with Head TSL at 3700 MHz

SAR averaged over 1 cm^3 (1 g) of Head TSL	Condition	
SAR measured	100 mW input power	6.67 W/kg
SAR for nominal Head TSL parameters	normalized to 1W	**66.7 W/kg ± 24.4 % (*k*=2)**
SAR averaged over 10 cm^3 (10 g) of Head TSL	Condition	
SAR measured	100 mW input power	2.46 W/kg
SAR for nominal Head TSL parameters	normalized to 1W	**24.6 W/kg ± 24.2 % (*k*=2)**