Installation Manual

Thermostat Application Guide

Description	
Gas or Oil Heat	Yes
Electric Furnace	Yes
Heat Pump (No Aux. or Emergency Heat)	Yes
Heat Pump (With Electric Aux.)	Yes
Heat Pump (With Gas Aux.)	No
Multi-Stage Systems	No
Heat Only Systems - Floor or Wall Furnace	Yes
Cool Only Systems	Yes
High and Low Fan Speed	Yes
Millivolt	No
Emergency Heat	No
Conventional Single Stage Furnace	Yes
Geothermal	Yes

Table of Contents page

Installation Tips 2-3
Thermostat Quick Reference 4
Wiring 5-6
Wiring Diagrams 7-8
Technician Setup 9-10
Swing Setting 11
Specifications 12

Power Type

Battery Power
Hardwire (Common Wire)
Hardwire (Common Wire) with Battery Backup

A trained, experienced technician must install this product.

Carefully read these instructions. You could damage this product or cause a hazardous condition if you fail to follow these instructions.

Installation Tips

Wall Locations

The thermostat should be installed approximately 4 to 5 feet above the floor. Select an area with average temperature and good air circulation.

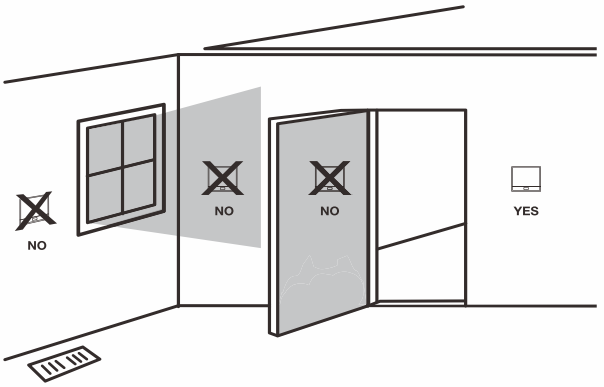

Installation Tip

Pick an installation location that is easy for the user to access. The temperature of the location should be representative of the building.

Do not install thermostat in locations:

- Close to hot or cold air ducts
- That are in direct sunlight
- With an outside wall behind the thermostat
- In areas that do not require conditioning
- Where there are dead spots or drafts (in corners or behind doors)
- Where there might be concealed chimneys or pipes

Subbase Installation

① Horizontal Mount
② Vertical Mount

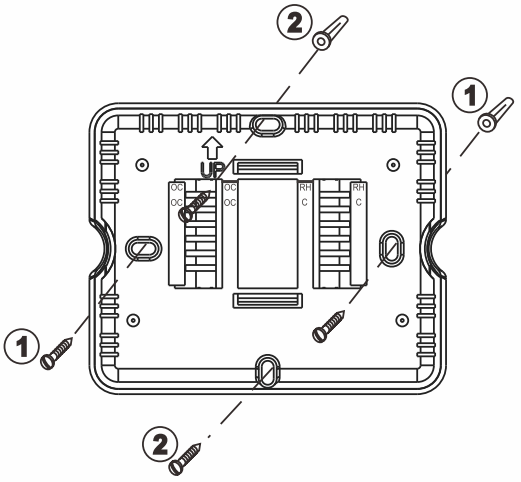

For vertical mount put one screw on the top and one screw on the bottom.
For horizontal mount put one screw on the left and one screw on the right.

Installation Tip: Electrical Hazard

Failure to disconnect the power before beginning to install this product can cause electrical shock or equipment damage.

Mercury Notice

All of our products are mercury free. However, if the product you are replacing contains mercury, dispose of it properly. Your local waste management authority can give you instructions on recycling and proper disposal.

Mount Thermostat

Align the 4 tabs on the subbase with corresponding slots on the back of the thermostat, then push gently until the thermostat snaps in place.

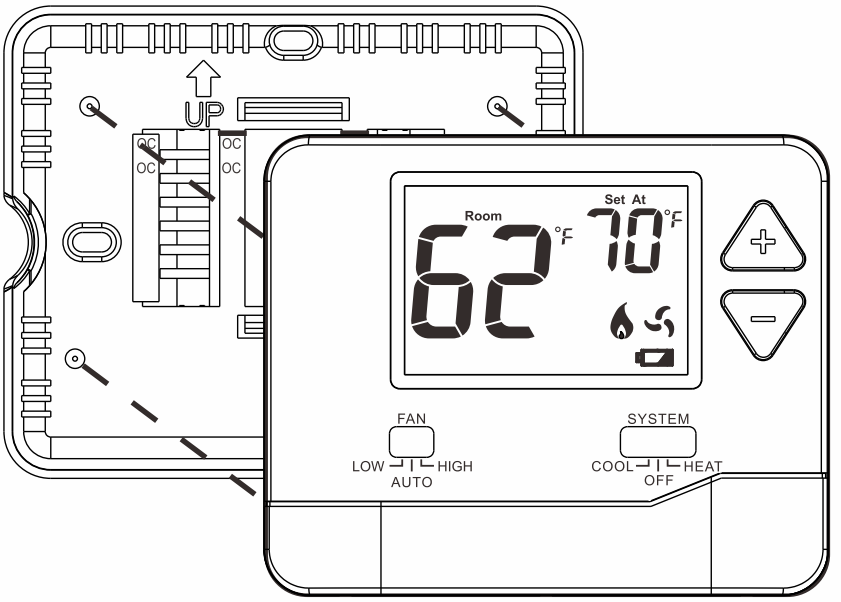

Battery Installation

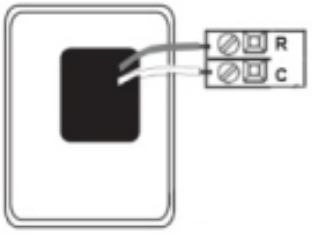

Battery installation is optional if thermostat is hardwired (R and C terminal connected to 24V power).

Important:

High quality alkaline batteries are recommended. Rechargeable batteries or low quality batteries do not guarantee a 1-year life span.

Insert 2 AAA Alkaline batteries (included). High quality alkaline batteries are recommended.

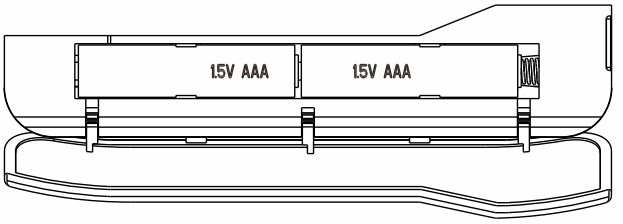

Getting to know your thermostat

I Occupied (mannd state) and unoccupied (unmanned state) switches :

1.Connect the two OCs behind the thermostat and they are in the Occupied (manned state).

2.Disconnect the two OCs behind the thermostat and they are in an unoccupied (unmanned state).

3. In unoccupied (unmanned) state, the user cannot modify the operating temperature. HEAT is fixed at 60 ˚F (16 ˚C); COOL is fixed at 80 ˚F(27 ˚C)

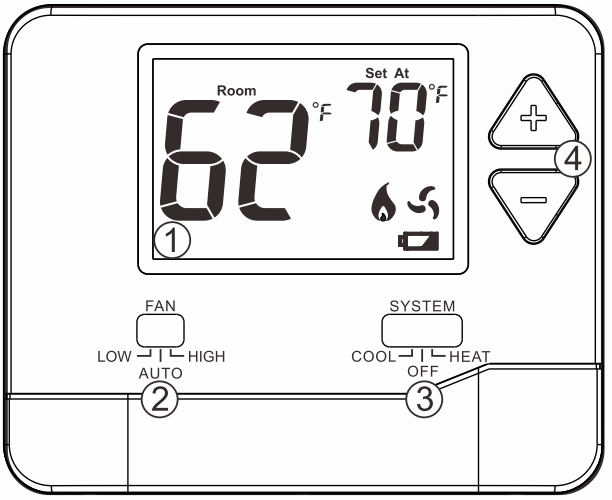

Indicates the current room temperature.

Displays the user selectable setpoint temperature.

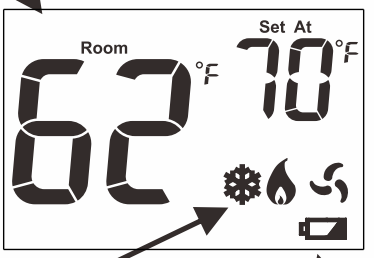

System operation indicators: On will display when the COOL or HEAT.

Low Battery Indicator: Replace batteries when indicator is shown.

① LCD
② Fan Switch
③ System Switch
④ Setpoint Buttons

Wiring

1. If you are replacing a thermostat, make note of the terminal connections on the thermostat that is being replaced. In some cases the wiring connections will not be color coded. For example, the red wire may not be connected to the **R** terminal.
2. Loosen the terminal block screws. Insert wires then retighten terminal block screws.

Installation Tip

Do not overtighten terminal block screws, as this can damage the terminal block. A damaged terminal block can keep the thermostat from fitting on the subbase correctly or cause system operation issues.

Max Torque = 6in-lbs.

Terminal	1 Heat 1 Cool Conventional System	1 Heat 1 Cool Heat Pump System	2 Heat 1 Cool Heat Pump System
R	Transformer power (cooling)	Transformer power (cooling)	Transformer power (cooling)
C	Transformer common	Transformer common	Transformer common
B	Energized in heating	Heat pump changeover valve energized in cooling	Heat pump changeover valve energized in heating
O	Energized in cooling	Heat pump changeover valve energized in cooling	Heat pump changeover valve energized in cooling
GL	Fan Relay, Low	Fan Relay, Low	Fan Relay, Low
GH	Fan Relay, High	Fan Relay, High	Fan Relay, High
W	First stage of heat	N/A	Second stage of heat
Y	First stage of cool	First stage of heat & cool	First stage of heat & cool

Wiring

This thermostat is shipped from the factory to operate a conventional heating and cooling system. This thermostat will also operate a heat pump system. See the “heat pump” configuration step on page 10 of this manual to configure the thermostat for heat pump applications.

Wiring Tips

Caution:
Electrical Hazard

Failure to disconnect the power before beginning to install this product can cause electrical shock or equipment damage.

Warning:

All components of the control system and the thermostat installation must conform to Class II circuits per the NEC Code.

C Terminal

The C (common wire) terminal does not have to be connected when the thermostat is powered by batteries.

Wire Specifications

Use shielded or non-shielded 18-22 gauge thermostat wire.

Note:

When connecting the Thermostat to a PTAC, refer to the PTAC manufacturer instructions to enable remote thermostat operation.

1. Power supply
2. Jumper (not supplied) to connect GL and GH terminals.
3. Thermostat must be set to O and B to match the changeover valve, O is the cool changeover valve, B is the heat changeover valve.
4. The Aux Heat Relay is energized as the second stage of heat.

Typical 1H/1C System: 2 Speed Fan

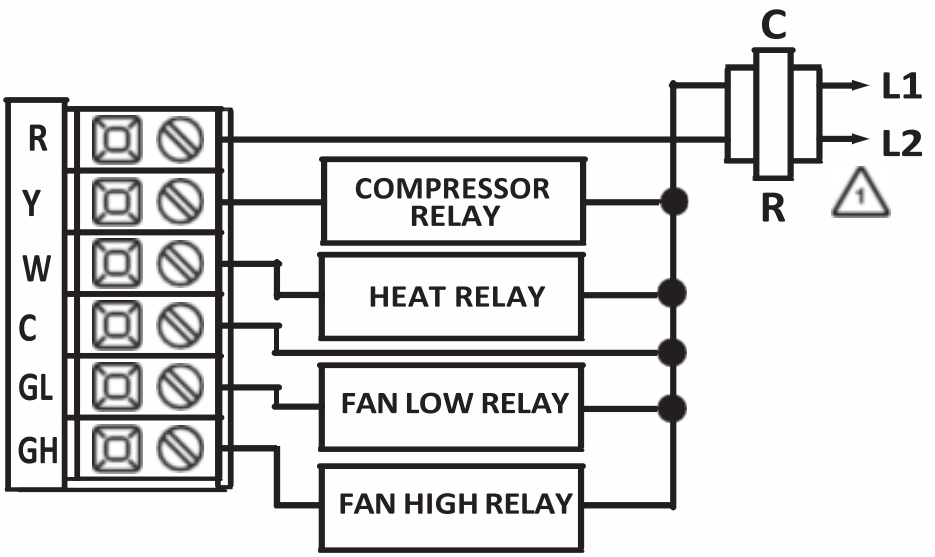

Typical 1H/1C System: 1 Speed Fan

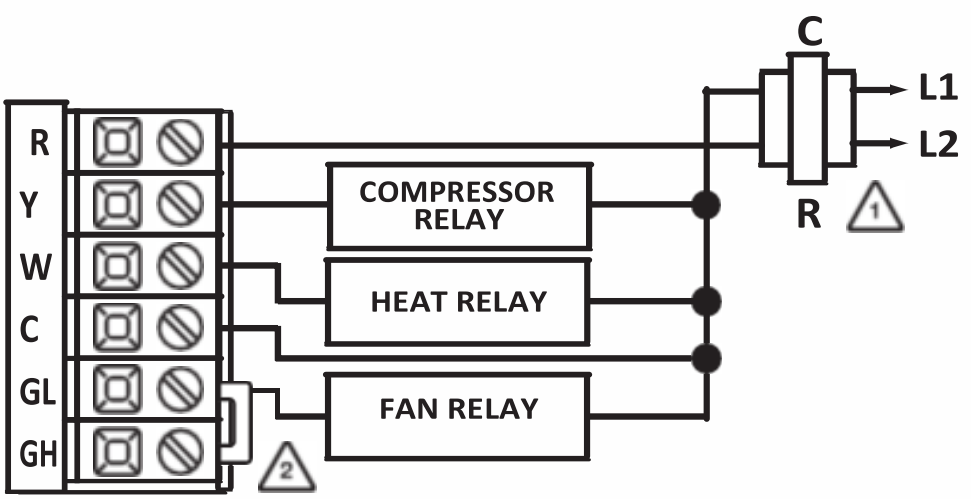

Typical 1H/1C Heat Pump System: 2 Speed Fan

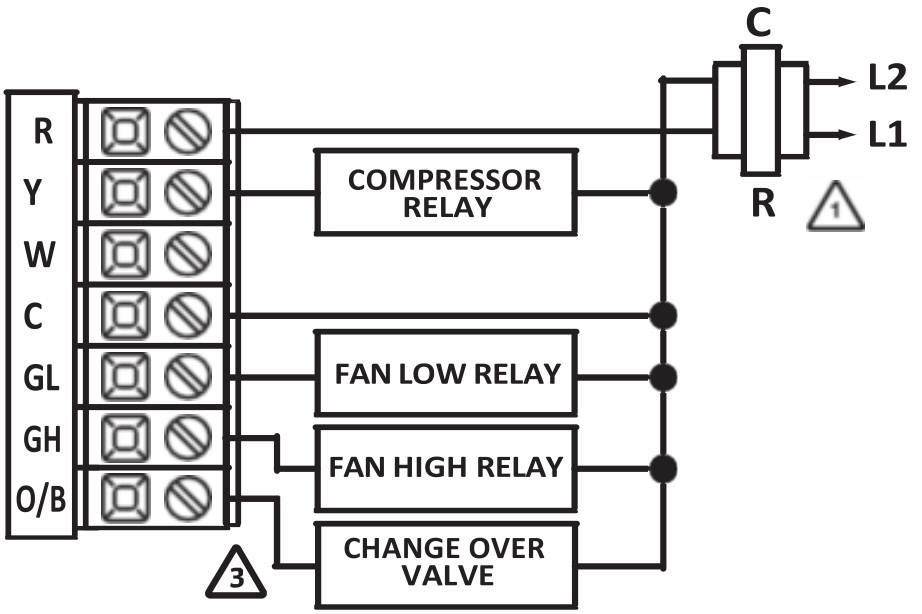

Typical 2H/1C Heat Pump System: 2 Speed Fan

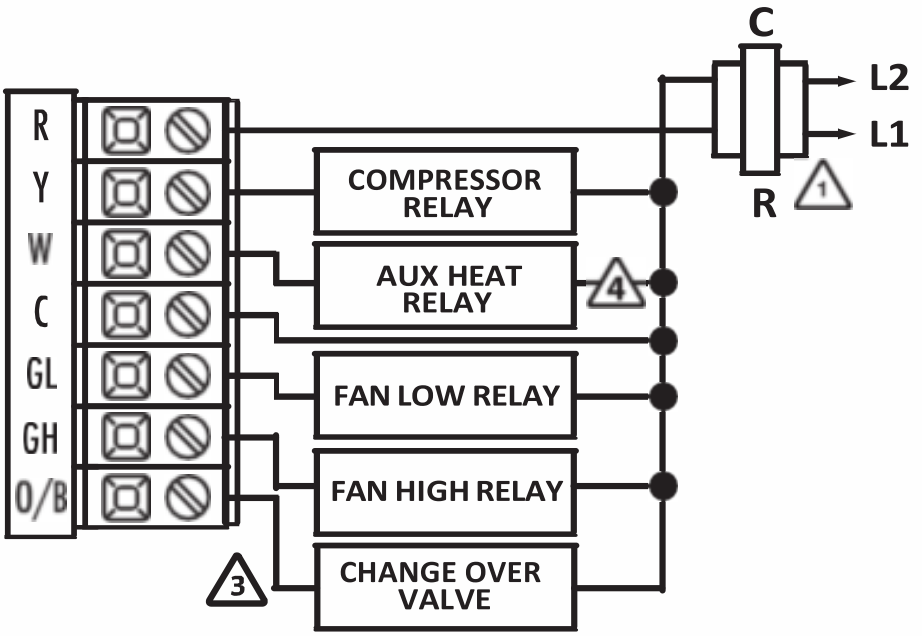

Note:

Most PTAC systems support two speed fan operation. In a single speed fan PTAC system or conventional single speed fan system, a jumper should be installed between GL and GH on the thermostat.

Fan Operation Setup

Electric: The thermostat operation jumper pin should be put in the ELEC position. This setting allows the thermostat to operate the fan during a call for heat. Most PTAC systems will require ELEC Fan Operation Setup.

Gas: For systems that control the fan during a call for heat, put the jumper pin into the GAS position.

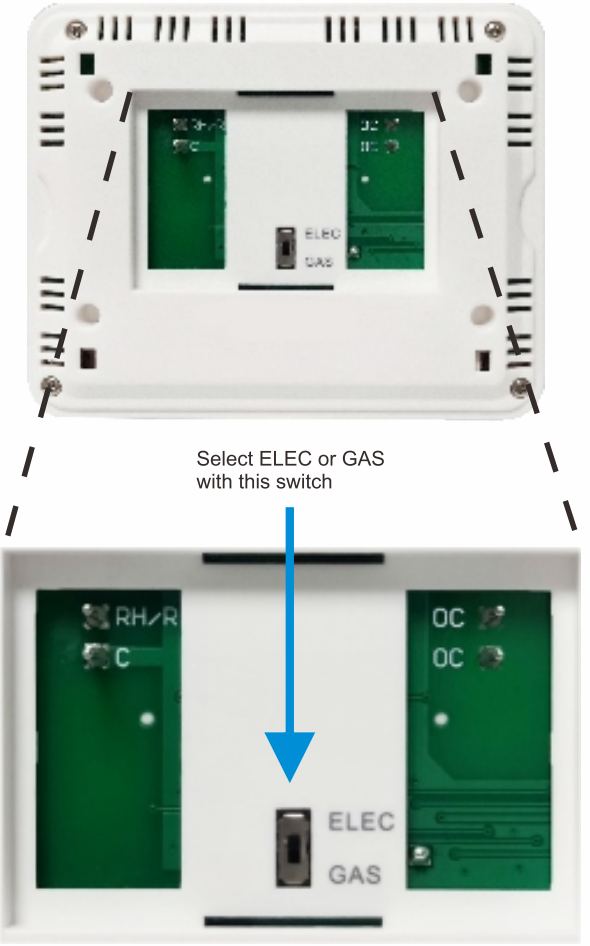

Technician Setup Menu

1.Set the thermostat system switch to OFF.
2.To enter Tech Setup Menu,press and hold “+”and “-”together for 3 seconds.
3.Use “+”and“-”to select desired setting for each option.
4.Tap “+”and “-”together to move next option.
5.To exit Tech Setup Menu,move system switch or wait for 15 seconds.

Technician Setup Menu

Tech Setup Steps		LCD Will Show	Adjustment Options	Default
Room Temperature Calibration	This feature allows the installer to change the calibration of the room temperature display. For example, if the thermostat reads 70˚ and you would like it to read 72˚ then select +2.	Calibration 0 °F	You can adjust the room temperature display to read up to 4˚ above or below the factory calibrated reading.	0 °F
Pair	Transmitter and receiver pair code	LF	Press and hold "+" for 3 seconds until "LE" is flashed. Then release	
F or C	Select for Fahrenheit temperature read out select C for Celsius read out.	°C	F for Fahrenheit C for Celsius	°C
Compressor Short Cycle Delay	The compressor short cycle delay protects the compressor from short cycling. This feature will not allow the compressor to be turned on for 5 minutes after it was last turned off.	ON Com Delay	Selecting ON will not allow the compressor to be turned on for 5 minutes after the last time the compressor was switched off. Select OFF to remove this delay.	ON
Change Over Valve Selection	Select 0 for a changeover valve that energizes in cooling. Select b for a change over valve that energizes in heating.	b CO	0 for cooling changeover valve.b for heating changeover valve.	b
Heat Pump	When turned on the thermostat will operate a heat pump.Y will be the first stage of heat & cool, W will be the second stage of heat.	OF HU	OFF configures the thermostat for non heat pump systems. ON configures the thermostat for heat pump systems.	OFF

1.Set the thermostat system switch to the desired position (COOL or HEAT).
2.Press and hold “+”and “-”together for 3 seconds.
3.Use “+”and “-” to adjust desired swing setting (The display reads in tenths of a degree.)
4.To exit,move system switch or wait for 10 seconds.

Swing Settings		LCD Will Show		
Cooling Swing (SYSTEM COOL)	The swing setting, often called“cycle rate”, “differential” or “anticipation” is adjustable. A smaller swing setting will cause more frequent cycles and a larger swing setting will cause fewer cycles.	0.8 °F Cool Swing	The cooling swing setting is adjustable from 0.2˚ to 2˚. For example: A swing setting of 0.5˚ will turn the cooling on at approximately 0.5˚ above the setpoint and turn the cooling off at approximately 0.5˚ below the setpoint.	0.8 °F
Heating Swing (SYSTEM HEAT)	The swing setting, often called“cycle rate”, “differential or “anticipation” is adjustable. A smaller swing setting will cause more frequent cucles and a larger swing setting will cause fewer cycles	0.8 °F Heat Swing	The heating swing setting is adjustable from 0.2˚ to 2˚. For example: A swing setting of 0.5˚ will turn the heating on at approimately 0.5˚ below the setpoint and turn the heating off at approximately 0.5˚ above the setpoint.	0.8 °F

Swing Setting

The second stage of Heat will turn on at 2x the swing setting. The second stage will turn off when 1x the swing is reached. For example, if the swing setting is 0.8˚ for heating and the thermostat is set at 70˚ F, the first stage will turn on at approximately 69.2˚ F. The second stage will turn on at 68.4˚F and the first will turn off at 70.8˚ F.

RF Pairing

1.Receiver: Use a slender object into the hole and keep it depressed (for approximately 5 seconds) until the red LED starts flashing.

2. Transmitter: Turn the SYSTEM switch to OFF. Press and hold“+” and “-” together for 3 seconds to access the interface of room temperature calibration. Press and hold“+” and “-” together until“LE” is displayed on the LCD.Then press and hold "+" for 3 seconds , the transmitter will transmit the code signal. When the red LED on the receiver stops flashing, indicating that the code is successful.

Specifications

Thermostat

The display range of temperature ...	32˚F to 99˚F (1˚C to 40˚C)
The control range of temperature....	60˚F to 80˚F (16˚C to 27˚C)
Load rating.....	1 amp per terminal, 1.5 amp maximum all terminals combined
Swing (cycle rate or differential)	Heating is adjustable from 0.2˚ to 2.0˚ Cooling is adjustable from 0.2˚ to 2.0˚
Power source	18 to 30 VAC, NEC Class II, 50/60 Hz for hardwire Battery power from 2 AAA Alkaline batteries
Operating ambient	32˚F to +105˚F (0˚C to +41˚C)
Operating humidity	90% non-condensing maximum
Dimensions of thermostat	120 x 98 x 28MM
Operating Frequency	915 MHz

FCC Warning

This device complies with part 15 of the FCC Rules. Operation is subject to the following two conditions:

(1) This device may not cause harmful interference, and (2) this device must accept any interference received, including interference that may cause undesired operation.

Any Changes or modifications not expressly approved by the party responsible for compliance could void the user's authority to operate the equipment.

Note: This equipment has been tested and found to comply with the limits for a Class B digital device, pursuant to part 15 of the FCC Rules. These limits are designed to provide reasonable protection against harmful interference in a residential installation. This equipment generates uses and can radiate radio frequency energy and, if not installed and used in accordance with the instructions, may cause harmful interference to radio communications. However, there is no guarantee that interference will not occur in a particular installation. If this equipment does cause harmful interference to radio or television reception, which can be determined by turning the equipment off and on, the user is encouraged to try to correct the interference by one or more of the following measures:

-Reorient or relocate the receiving antenna.

-Increase the separation between the equipment and receiver.

-Connect the equipment into an outlet on a circuit different from that to which the receiver is connected.

-Consult the dealer or an experienced radio/TV technician for help.

The device has been evaluated to meet general RF exposure requirement. The device can be used in portable exposure condition without restriction

Installation Manual