3 in 1 Magnetic Charging Station User Guide

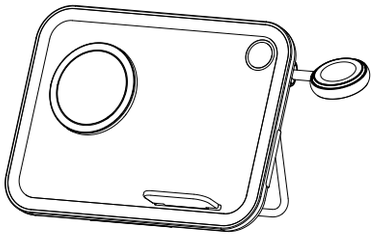

Model: V22

Thank you for purchasing and using this product!

Please read this operation instruction carefully before using this product.

Product Specification

3 in 1 Magnetic Charging Station

- Input: 5V ⎓ 3A / 9V ⎓ 3A / 12V ⎓ 2.5A
- Cell Phone Output: 10W (Max)
- Apple Watch Output: 3W
- AirPods Output: 5W

Applicable Devices

iPhone	iPhone 15 / 14 / 13 / 12 Series
AirPods	AirPods Pro 2 / AirPods Pro AirPods 3 / AirPods 2
Apple Watch	Apple Watch Ultra, SE, 9-2

The list is of known existing models and will be compatible with subsequent new models.

⚠ Blinking white LED light during wireless charging to indicate charging failure.

The following situation can cause failures, like charging slowly, stop charging, over-temperature for charging position.

1. The adapter is not run up to standard.
2. The charging cable is not up to standard.
3. The phone case is too thick (within 2mm thickness phone case recommended).
4. The built-in wireless charging receiver position is not coincided with wireless charger coil position.
5. There is metal/magnet on the back of cell phone or phone case.
6. Smartphone does not support wireless charging function.

⚠ Attention

1. Please keep the charger away from water or other liquid.
2. If you need to clean the charger, please make sure it is not connected to power supply.
3. Operating temperature: −20~45℃.

Product Description

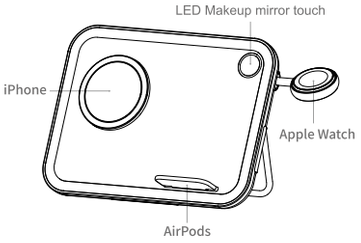

1. 3 in 1 wireless charging station, charge your iPhone/Apple watch/AirPods simultaneously.
2. Practical functions of LED makeup mirror and night light.
3. Stainless steel support frame, convenient for storage on the go.

Input

Connect the wireless charger and adapter with the charging cable.

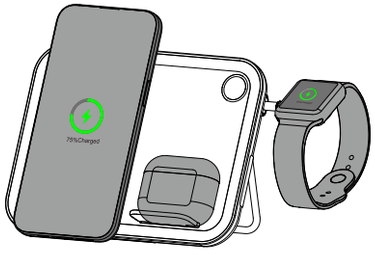

Please use a PD 30W adapter so that the charging will enter the fast charging mode.

LED indicator light

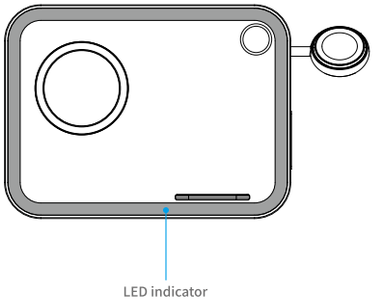

LED indicator
Charging abnormal flashing white light

Case Usage

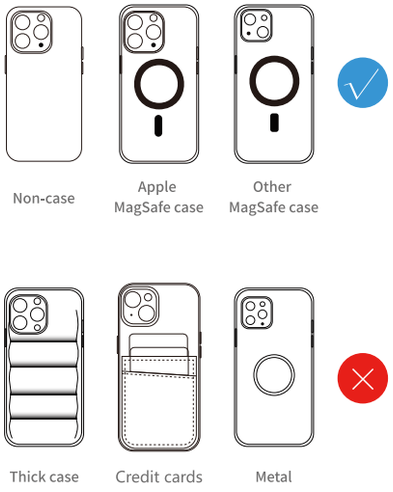

MADE IN CHINA

FCC Requirement

changes or modifications not expressly approved by the party responsible for compliance could void the user's authority to operate the equipment.
This device complies with Part 15 of the FCC Rules. Operation is subject to the following two conditions:
(1) this device may not cause harmful interference, and
(2) this device must accept any interference received, including interference that may cause undesired operation.

Note: This equipment has been tested and found to comply with the limits for a Class B digital device, pursuant to Part 15 of the FCC Rules. These limits are designed to provide reasonable protection against harmful interference in a residential installation. This equipment generates, uses, and can radiate radio frequency energy, and if not installed and used in accordance with the instructions, may cause harmful interference to radio communications. However, there is no guarantee that interference will not occur in a particular installation. If this equipment does cause harmful interference to radio or television reception, which can be determined by turning the equipment off and on, the user is encouraged to try to correct the interference by one or more of the following measures:

- Reorient or relocate the receiving antenna.
- Increase the separation between the equipment and receiver.
- Connect the equipment into an outlet on a circuit different from that to which the receiver is connected.
- Consult the dealer or an experienced radio/TV technician for help.

This equipment complies with FCC radiation exposure limits set forth for an uncontrolled environment. This equipment should be installed and operated with a minimum distance of 20cm between the radiator & your body. This transmitter must not be co-located or operating in conjunction with any other antenna or transmitter.