LE920A4 Auto
HW User Guide

Doc#: 1VV0301261
Rev. 4.7.1 – 2019-11-21

SPECIFICATIONS ARE SUBJECT TO CHANGE WITHOUT NOTICE

NOTICE

While reasonable efforts have been made to assure the accuracy of this document, Titan assumes no liability resulting from any inaccuracies or omissions in this document, or from use of the information obtained herein. The information in this document has been carefully checked and is believed to be reliable. However, no responsibility is assumed for inaccuracies or omissions. Titan reserves the right to make changes to any products described herein and reserves the right to revise this document and to make changes from time to time in content hereof with no obligation to notify any person of revisions or changes. Titan does not assume any liability arising out of the application or use of any product, software, or circuit described herein; neither does it convey license under its patent rights or the rights of others.

It is possible that this publication may contain references to, or information about Titan products (machines and programs), programming, or services that are not announced in your country. Such references or information must not be construed to mean that Titan intends to announce such Titan products, programming, or services in your country.

COPYRIGHTS

This instruction manual and the Titan products described in this instruction manual may be, include or describe copyrighted Titan material, such as computer programs stored in semiconductor memories or other media. Laws in the Italy and other countries preserve for Titan and its licensors certain exclusive rights for copyrighted material, including the exclusive right to copy, reproduce in any form, distribute and make derivative works of the copyrighted material. Accordingly, any copyrighted material of Titan and its licensors contained herein or in the Titan products described in this instruction manual may not be copied, reproduced, distributed, merged or modified in any manner without the express written permission of Titan. Furthermore, the purchase of Titan products shall not be deemed to grant either directly or by implication, estoppel, or otherwise, any license under the copyrights, patents or patent applications of Titan, as arises by operation of law in the sale of a product.

COMPUTER SOFTWARE COPYRIGHTS

The Titan and 3rd Party supplied Software (SW) products described in this instruction manual may include copyrighted Titan and other 3rd Party supplied computer programs stored in semiconductor memories or other media. Laws in the Italy and other countries preserve for Titan and other 3rd Party supplied SW certain exclusive rights for copyrighted computer programs, including the exclusive right to copy or reproduce in any form the copyrighted computer program. Accordingly, any copyrighted Titan or other 3rd Party supplied SW computer programs contained in the Titan products described in this instruction manual may not be copied (reverse engineered) or reproduced in any manner without the express written permission of Titan or the 3rd Party SW supplier. Furthermore, the purchase of Titan products shall not be deemed to grant either directly or by implication, estoppel, or otherwise, any license under the copyrights, patents or patent applications of Titan or other 3rd Party supplied SW, except for the normal non-exclusive, royalty free license to use that arises by operation of law in the sale of a product.

USAGE AND DISCLOSURE RESTRICTIONS

I. License Agreements

The software described in this document is the property of Titan and its licensors. It is furnished by express license agreement only and may be used only in accordance with the terms of such an agreement.

II. Copyrighted Materials

Software and documentation are copyrighted materials. Making unauthorized copies is prohibited by law. No part of the software or documentation may be reproduced, transmitted, transcribed, stored in a retrieval system, or translated into any language or computer language, in any form or by any means, without prior written permission of Titan

III. High Risk Materials

Components, units, or third-party products used in the product described herein are NOT fault-tolerant and are NOT designed, manufactured, or intended for use as on-line control equipment in the following hazardous environments requiring fail-safe controls: the operation of Nuclear Facilities, Aircraft Navigation or Aircraft Communication Systems, Air Traffic Control, Life Support, or Weapons Systems (High Risk Activities"). Titan and its supplier(s) specifically disclaim any expressed or implied warranty of fitness for such High Risk Activities.

IV. Trademarks

TITAN and the Stylized T Logo are registered in Trademark Office. All other product or service names are the property of their respective owners.

V. Third Party Rights

The software may include Third Party Right software. In this case you agree to comply with all terms and conditions imposed on you in respect of such separate software. In addition to Third Party Terms, the disclaimer of warranty and limitation of liability provisions in this License shall apply to the Third Party Right software.

TITAN HEREBY DISCLAIMS ANY AND ALL WARRANTIES EXPRESS OR IMPLIED FROM ANY THIRD PARTIES REGARDING ANY SEPARATE FILES, ANY THIRD PARTY MATERIALS INCLUDED IN THE SOFTWARE, ANY THIRD PARTY MATERIALS FROM WHICH THE SOFTWARE IS DERIVED (COLLECTIVELY “OTHER CODE”), AND THE USE OF ANY OR ALL THE OTHER CODE IN CONNECTION WITH THE SOFTWARE, INCLUDING (WITHOUT LIMITATION) ANY WARRANTIES OF SATISFACTORY QUALITY OR FITNESS FOR A PARTICULAR PURPOSE.

NO THIRD PARTY LICENSORS OF OTHER CODE SHALL HAVE ANY LIABILITY FOR ANY DIRECT, INDIRECT, INCIDENTAL, SPECIAL, EXEMPLARY, OR CONSEQUENTIAL DAMAGES (INCLUDING WITHOUT LIMITATION LOST PROFITS), HOWEVER CAUSED AND WHETHER MADE UNDER CONTRACT, TORT OR OTHER LEGAL THEORY, ARISING IN ANY WAY OUT OF THE USE OR DISTRIBUTION OF THE OTHER CODE OR THE EXERCISE OF ANY RIGHTS GRANTED UNDER EITHER OR BOTH THIS LICENSE AND THE LEGAL TERMS APPLICABLE TO ANY SEPARATE FILES, EVEN IF ADVISED OF THE POSSIBILITY OF SUCH DAMAGES.

APPLICABILITY TABLE

This documentation applies to the following products:

Table 1: Applicability Table

Module Name	Description
LE920A4-NA	North America regional variant (AT&T, T-Mobile)
LE920A4-NV (*)	North America regional variant (Verizon)
LE920A4-EU	Europe regional variant
HE920A-EU (*)	Non-LTE Europe variant
LE920A4-CN	China variant
LE920A4-AP (*)	APAC variant

(*) Variants which were not designed yet

CONTENTS

1. INTRODUCTION 9
1.1. Scope 9
1.2. Audience 9
1.3. Contact Information, Support 9
1.4. Text Conventions 10
1.5. Related Documents 11

2. GENERAL PRODUCT DESCRIPTION 12
2.1. Overview 12
2.2. Applications 12
2.3. General Functionality and Main Features 13
2.4. Block Diagram 16
2.5. Environmental Requirements 17
2.5.1. Temperature Range 17
2.5.2. RoHS Compliance 17
2.6. Frequency Bands 18
2.6.1. RF Bands per Regional Variant 18
2.6.2. Reference Table of RF Bands Characteristics 19
2.7. RF parameters 22
2.7.1. Sensitivity 22
2.7.2. Output power 22
2.8. Mechanical Dimensions 22
2.9. Weight 22

3. MODULE CONNECTIONS 23
3.1. Pin-out 23
3.2. Signals That Must Be Connected 37
3.3. LE920A4 LGA Pads Layout 40

4. ELECTRICAL SPECIFICATIONS 41
4.1. Absolute Maximum Ratings – Not Operational 41
4.2. Recommended Operating Conditions 41
4.3. Logic Level Specifications 42
4.3.1. 1.8V Pads - Absolute Maximum Ratings 42
4.3.2. 1.8V Standard GPIOs 42
4.3.3. 1.8V SD Card Pads 43
4.3.4. 1.8V SIM Card Pads 43
4.3.5. Dual Voltage Pads - Absolute Maximum Ratings 44

4.3.6. SD Card Pads @ 2.95V 44
4.3.7. SIM Card Pads @2.95V 45

5. HARDWARE COMMANDS 46
5.1. Turning on the Module 46
5.2. Initialization and Activation State 46
5.3. Turning off the Module 48
5.3.1. Shutdown by Software Command 49
5.3.2. Shutdown by ON/OFF Pad 50
5.3.3. Unconditional Hardware Shutdown via SHDN Pad 51
5.4. Unconditional Hardware Reset 52
5.5. Powering OFF the Module 53

6. POWER SUPPLY 54
6.1. Power Supply Requirements 54
6.2. General Design Rules 56
6.2.1. Electrical Design Guidelines 56
6.2.1.1. + 5V Input Source Power Supply Design Guidelines 56
6.2.1.2. + 12V Input Source Power Supply Design Guidelines 57
6.2.1.3. Battery Source Power Supply Design Guidelines 59
6.2.2. Thermal Design Guidelines 59
6.2.3. Power Supply PCB Layout Guidelines 60

7. ANTENNA(S) 62
7.1. GSM/WCDMA/TD-SCDMA/LTE Antenna Requirements 62
7.2. GSM/WCDMA/TD-SCDMA/LTE Antenna – PCB Line Guidelines 63
7.3. GSM/WCDMA/TD-SCDMA/LTE Antenna – Installation Guidelines 64
7.4. Antenna Diversity Requirements 64
7.5. GPS/GNSS Antenna Requirements 65
7.5.1. Combined GPS/GNSS Antenna 65
7.5.2. Linear and Patch GPS/GNSS Antenna 65
7.5.3. Front End Design Considerations 65
7.5.4. GPS/GNSS Antenna – PCB Line Guidelines 66
7.5.5. GPS/GNSS Antenna – Installation Guidelines 66

8. HARDWARE INTERFACES 67
8.1. USB Port 68
8.1.1. USB OTG support 69
8.2. HSIC Interface (Optional) 69
8.3. Ethernet Connectivity (optional) 70
8.3.1. SGMII Interface 70

8.3.2. Ethernet Control Interface 70
8.4. Serial Ports 71
8.4.1. Modem Serial Port 1 72
8.4.2. Modem Serial Port 2 74
8.4.3. RS232 Level Translation 75
8.5. Peripheral Ports 77
8.5.1. SPI – Serial Peripheral Interface 77
8.5.2. I2C - Inter-integrated Circuit 78
8.5.3. SD/MMC Card Interface 78
8.5.4. WiFi (SDIO) Control Interface 80
8.6. Audio Interface 81
8.6.1. Analog Audio 81
8.6.2. Analog Audio Characteristics 82
8.6.2.1. Analog Inputs Characteristics 82
8.6.2.2. Analog Output Characteristics 84
8.6.3. Digital Audio 85
8.6.3.1. Short Frame Timing Diagrams 86
8.6.3.2. Long Frame Timing Diagrams 88
8.7. General Purpose I/O 90
8.7.1. Using a GPIO Pad as Input 91
8.7.2. Using a GPIO Pad as an Interrupt Source 91
8.7.3. Using a GPIO Pad as Output 91

9. MISCELLANEOUS FUNCTIONS 92
9.1. Indication of Network Service Availability 92
9.2. RTC – Real Time Clock 92
9.3. VAUX Power Output 93
9.4. ADC Converter 94
9.4.1. Description 94
9.4.2. Using ADC Converter 94
9.5. Using the Temperature Monitor Function 94
9.6. Fuel Gauge (optional) 95
9.7. GNSS Characteristics 96
9.7.1. Reciever performance 96
9.7.2. GPS Sync Characteristics 96

10. MOUNTING THE MODULE ON YOUR BOARD 97
10.1. General 97
10.2. Finishing & Dimensions 97
10.3. Recommended Foot Print for the Application 98

10.4. Stencil 99
10.5. PCB Pad Design 99
10.6. Recommendations for PCB Pad Dimensions (mm) 99
10.7. Solder Paste 100
10.7.1. Solder Reflow 100
10.8. Cleaning 101

11. APPLICATION GUIDE 102
11.1. Debug of the Module in Production 102
11.2. Bypass Capacitor on Power Supplies 103
11.3. SIM Interface 104
11.3.1. SIM Schematic Example 104
11.4. EMC Recommendations 105
11.5. Download and Debug Port 105
11.5.1. Fast Boot Mode 105
11.5.2. Recovery Boot Mode 106
11.6. Antenna Detection 106

12. PACKING SYSTEM 107
12.1. Tray 107
12.2. Tape & Reel 110
12.3. Moisture Sensitivity 111

13. SAFETY RECOMMENDATIONS 112

14. CONFORMITY ASSESSMENT ISSUES 113
14.1. FCC/ISED Regulatory notices 113
14.2. Declaration of Conformity 115

15. ACRONYMS 116

16. DOCUMENT HISTORY 119

1. Introduction

1.1. Scope

This document introduces the Titan LE920A4 module and presents possible and recommended hardware solutions for developing a product based on this module. All the features and solutions detailed in this document are applicable to all module variants, where “module” refers to the variants listed in the applicability table.

If a specific feature is applicable to a specific product only, it will be clearly marked.

NOTE:
Module refers to all modules listed in the Applicability Table.

This document takes into account all the basic functions of a wireless module; a valid hardware solution is suggested for each function, and incorrect solutions and common errors to be avoided are pointed out.

Obviously, this document cannot embrace every hardware solution or every product that can be designed. Obviously, avoiding invalid solutions must be considered mandatory. Where the suggested hardware configurations need not be considered mandatory, the information given should be used as a guide and a starting point for properly developing your product with the Titan module.

NOTE:
The integration of the module within a user application must be done according to the design rules described in this manual.

1.2. Audience

This document is intended for Titan customers, especially system integrators, about to implement their applications using the Titan module.

1.3. Contact Information, Support

For general contact, technical support, to report documentation errors and to order manuals, contact Titan Technical Support via Team forge CollabNet.

https://ctf.tustitan.com/

Alternatively, get in touch with your usual Titan contact.

For more information about Titan visit:

http://www.tustitan.com

To register for product news and announcements or for product questions contact Titan Technical Support. Our aim is to make this guide as helpful as possible. Keep us informed of your comments and suggestions for improvements.

Titan appreciates feedback from the users of our information.

1.4. Text Conventions

The following conventions are used to emphasize specific types of information:

DANGER:
Danger – This information MUST be followed or catastrophic equipment failure or bodily injury may occur.

WARNING:
Caution or Warning – Alerts the user to important points about integrating the module, if these points are not followed, the module and end user equipment may fail or malfunction.

NOTE:
Tip or Information – Provides advice and suggestions that may be useful when integrating the module.

All dates are in ISO 8601 format, i.e. YYYY-MM-DD.

1.5. Related Documents

Table 2: Related Documents

Document Title	Document Number
Ref 1: LE920A4 AT Command User Guide	80490ST10778A
Ref 2: LE920A4 Software Guide	1VV0301332
Ref 3: Generic EVB HW User Guide	1VV0301249
Ref 4: LE920A4 Interface Board HW User Guide	1VV0301248
Ref 5: Digital Voice Interface_Application_Note	80000NT11246A
Ref 6: Titan_LE920A4_LE910Cx_Wi-Fi_Interface_Application_Note_r1	80490NT11511A
Ref 7: Antenna Detection Application Note	80000NT10002A
Ref 8: High-Speed Inter-Chip USB Electrical Specification, version 1.0 (a supplement to the USB 2.0 specification, Section 3.8.2)	
Ref 9: ETH_Expansion_board_Application Note	80490NT11622A
Ref 10: LE920A4 Thermal Guidelines	80490NT11517A

Ref 9: ETH_Expansion_board_Application Note
Ref 10: LE920A4 Thermal Guidelines

2. General Product Description

2.1. Overview

The LE920A4 module is Titan's platform for automotive telematics on-board units (OBU's) for applications, such as automotive telematics and eCall, based on the following technologies:

- 4G cellular for voice and data communication
- GNSS (optional) - GPS, GLONASS, BeiDou, Galileo, QZSS, for positioning service
- Embedded security
  - ARM Trust Zone services (optional)
- Designed for automotive markets[1] quality needs

In its most basic use case, the module can be applied as a wireless communication front-end for telematics products, offering GNSS and mobile communication features to an external host CPU through its rich interfaces.

The module can further support customer software applications and security features. The module provides a software application development environment with sufficient system resources for creating rich on-board applications. Thanks to a dedicated application processor and embedded security resources, product developers and manufacturers can create products that guarantee fraud prevention and tamper evidence without extra effort for additional security precautions.

The module can be self-sufficient and serve as a fully integrated solution for applications, such as location-based cellular telematics, navigation, road pricing and eCall. In such a case, the customer would simply complement the module with a power supply, speaker amplifier, microphone, antennas, and an HMI (if applicable).

The module is available in hardware variants as listed in Table 1: Applicability Table. The designated RF band sets per each variant are detailed in Section 2.6, Frequency Bands.

2.2. Applications

The module can be used for telematics applications where tamper-resistance, confidentiality, integrity, and authenticity of end-user information are required, for example:

- Emergency call
- Telematics services
- Road pricing
- Pay-as-you-drive insurance
- Stolen vehicles tracking
- Internet connectivity

[1] In accordance with Titan's Robustness Validation, using AEC-Q100-defined qualification tests

2.3. General Functionality and Main Features

The LE920A4 family of automotive cellular modules features an advanced LTE and multi-RAT modem together with a powerful on-chip application processor and a rich set of interfaces.

The major functions and features are listed below:

Table 3: Main Features

Function	Features
Modem	• Multi-RAT cellular modem for voice and data communication o LTE FDD/TDD Cat4 (150/50 Mbps DL/UL) o GSM/GPRS/EDGE o WCDMA up to DC HSPA+, Rel.9 o TD-SCDMA (China variant only) • Support for European eCall , US E911, and ERA Glonass • Support for SIM profile switching • Regional variants with optimal choice of RF bands for worldwide coverage of countries and MNOs • State-of-the-art GNSS solution with GPS/GLONASS/BeiDou/Galileo/QZSS receiver
Audio subsystem	• Embedded analog codec with two microphone inputs • Embedded analog codec with one stereo or two mono outputs • PCM/I2S digital audio interface • Up to 48 kHz sample rate, 16 bit words
Two USIM ports – dual voltage	• Class B and Class C support • Hot-swap support • Data rates up to 5 MHz
Application processor	Application processor to run customer application code • 32 bit ARM Cortex-A7 up to 1.2 GHz running the Linux operating system • Flash + DDR are large enough to allow for customer's own software applications • Default memory configuration is 4 Gb (512 MB) Flash + 2 Gb (256 MB) RAM • Other memory configurations can be supported upon request, for example: 2 Gbit Flash + 2 Gbit DDR or 4 Gbit Flash + 4 Gbit DDR.

Function	Features
Interfaces	Rich set of interfaces, including: • SD/MMC Card Interface supporting SD3.0 standard • SDIO for external WiFi transceiver supporting SDIO3.0 standard • SGMII for external Ethernet transceiver (optional) o Compliant with IEEE802.3 o Full duplex operation at 1 Gbps o Half/full duplex operation at 10/100 Mbps o Support for VLAN tagging o Support for IEEE1588, PTP (Precision Time Protocol) • USB2.0 – USB port is typically used for: o Flashing of firmware and module configuration o Production testing o Accessing the Application Processor's file system o AT command access o High-speed WWAN access to external host o Diagnostic monitoring and debugging o Communication between Java application environment and an external host CPU o NMEA data to an external host CPU • HSIC (Optional) o High-speed 480 Mbps (240 MHz DDR) USB transfers are 100% host driver compatible with traditional USB cable connected topologies o Bidirectional data strobe signal (STROBE) o Bidirectional data signal (DATA) o No power consumption unless a transfer is in progress o Maximum trace length 10 cm o Signals driven at 1.2V standard LVCMOS levels • Peripheral Ports – SPI, I2C, UART • GPIOs • Analog audio I/F • Antenna ports

Function	Features
Major software features	• Advanced security features o Boot integrity of firmware up to customer applications o Disable/secure re-enable of debug o Embedded security • FOTA (optional) • Titan Unified AT command set • Java VM (optional) with the following features: o Rich and standardized application environment for customer applications o State-of-the-art and high performance Java SE8 embedded Virtual Machine o Oracle Java SE8 Embedded, Compact Profile 1 o JIT-enabled
Form factor	Form factor (40x34mm), accommodating the multiple RF bands in each region variant
Environment and quality requirements	The entire module is designed and qualified by Titan for satisfying the environment and quality requirements for use in automotive applications[2].
Single supply module	The module generates all its internal supply voltages.
RTC	RTC is maintained as long as VBATT is supplied
Operating temperature	Range -40 °C to +85 °C (conditions as defined in Section 2.5.1,Temperature Range)

[2] In accordance with Titan's Robustness Validation, using AEC-Q100-defined qualification tests

2.4. Block Diagram

Figure 1 shows an overview of the internal architecture of the module.

It includes the following sub-functions:

- Application processor, Modem subsystem and Location processing with their external interfaces. These three functions are contained in a single SOC.
- RF front end, including antenna diagnosis circuitry
- Analog Audio codec for attaching external speaker amplifier and microphone
- Rich IO interfaces. Depending on which of the module's software features are enabled, some of its interfaces that are exported through multiplexing may be used internally and thus may not be usable by the application.
- PMIC with the RTC function inside

Figure 1: High-level Block Diagram

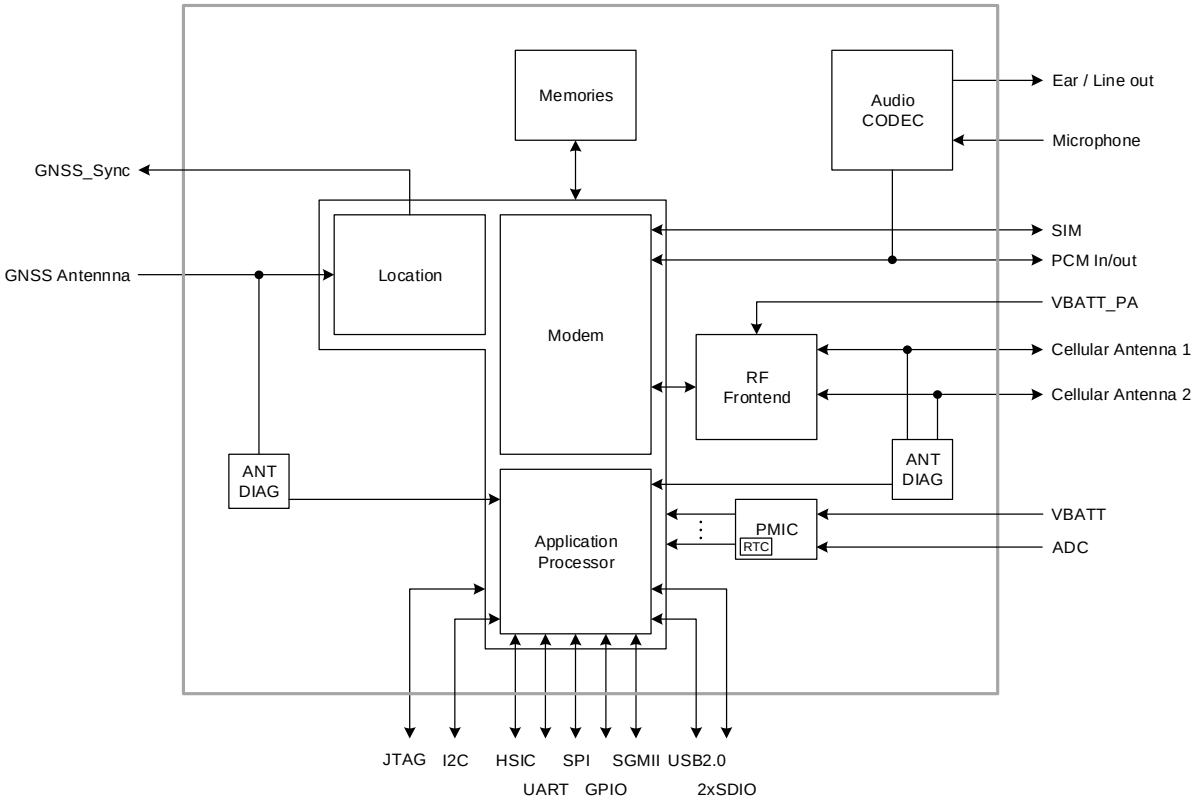

2.5. Environmental Requirements

2.5.1. Temperature Range

Table 4: Temperature Range

Operating temperature range	-20 ~ +55°C This range is defined by 3GPP (the global standard for wireless mobile communication). Titan guarantees its modules to comply with all the 3GPP requirements and to have full functionality of the module with in this range.
	-40 ~ +85°C Titan guarantees full functionality within this range as well. However, there may possibly be some performance deviations in this extended range relative to 3GPP requirements, which means that some RF parameters may deviate from the 3GPP specification in the order of a few dB. For example: receiver sensitivity or maximum output power may be slightly degraded. Even so, all the functionalities, such as call connection, SMS, USB communication, UART activation etc., will be maintained, and the effect of such degradations will not lead to malfunction.
	–40°C ~ +95°C eCall must be functional (until the module is broken)
Storage and non-operating temperature range	–40°C ~ +105°C

2.5.2. RoHS Compliance

As a part of Titan corporate policy of environmental protection, the module complies with the RoHS (Restriction of Hazardous Substances) directive of the European Union (EU directive 2011/65/EU).

2.6. Frequency Bands

The operating frequencies in GSM850, EGSM900, DCS1800, PCS1900, WCDMA & LTE modes conform to the 3GPP specifications.

2.6.1. RF Bands per Regional Variant

Table 5 summarizes of all region variants within the module family, showing the supported band sets in each variant.

Table 5: RF Bands per Regional Variant

Region Variant	LTE FDD	LTE TDD	HSPA+	TD-SCDMA	2G
LE920A4-NA	2, 4, 5, 7, 12	-	2, 4, 5	-	2, 5
LE920A4-NV (TBD)	2, 4, 5, 7(*), 13	-	2, 5	-	-
LE920A4-EU	1, 3, 5(*), 7, 8, 20, 28(*)	-	1, 3, 5(*), 8	-	3, 8
HE920A-EU (Non-LTE, TBD)	-	-	1, 3, 5, 8	-	2, 3, 5, 8
LE920A4-CN	1, 3, 5, 8, 26	38, 39, 40, 41M	1, 5, 8	34, 39	3, 8
LE920A4-AP (TBD)	1, 3, 5, 7, 8, 19, 21, 26, 28	-	1, 3, 5, 6, 8, 19	-	2, 3, 5, 8

NOTE:
(*) Optional bands with a different schedule than the standard configuration, can be removed if not required
Band 41M for China: 2,555-2,655 MHz

2.6.2. Reference Table of RF Bands Characteristics

Table 6: RF Bands Characteristics

Mode	Freq. Tx (MHz)	Freq. Rx (MHz)	Channels	Tx-Rx Offset
PCS 1900	1850.2 ~ 1909.8	1930.2 ~ 1989.8	512 ~ 810	80 MHz
DCS 1800	1710 ~ 1785	1805 ~ 1880	512 ~ 885	95 MHz
GSM 850	824.2 ~ 848.8	869.2 ~ 893.8	128 ~ 251	45 MHz
EGSM 900	890 ~ 915	935 ~ 960	0 ~ 124	45 MHz
	880 ~ 890	925 ~ 935	975 ~ 1023	45 MHz
WCDMA 2100 – B1	1920 ~ 1980	2110 ~ 2170	Tx: 9612 ~ 9888 Rx: 10562 ~ 10838	190 MHz
WCDMA 1900 – B2	1850 ~ 1910	1930 ~ 1990	Tx: 9262 ~ 9538 Rx: 9662 ~ 9938	80 MHz
WCDMA 1800 – B3	1710 ~ 1785	1805 ~ 1880	Tx: 937 ~ 1288 Rx: 1162 ~ 1513	95 MHz
WCDMA AWS – B4	1710 ~ 1755	2110 ~ 2155	Tx: 1312 ~ 1513 Rx: 1537 ~ 1738	400 MHz
WCDMA 850 – B5	824 ~ 849	869 ~ 894	Tx: 4132 ~ 4233 Rx: 4357 ~ 4458	45 MHz
WCDMA 900 – B8	880 ~ 915	925 ~ 960	Tx: 2712 ~ 2863 Rx: 2937 ~ 3088	45 MHz
WCDMA 1800 – B9	1750 ~ 1784.8	1845 ~ 1879.8	Tx: 8762 ~ 8912 Rx: 9237 ~ 9387	95 MHz
WCDMA 800 – B19	830 ~ 845	875 ~ 890	Tx: 312 ~ 363 Rx: 712 ~ 763	45 MHz
TDSCDMA 2000 – B34	2010 ~ 2025	2010 ~ 2025	Tx: 10054 ~ 10121 Rx: 10054 ~ 10121	0 MHz

Mode	Freq. Tx (MHz)	Freq. Rx (MHz)	Channels	Tx-Rx Offset
TDSCDMA 1900 – B39	1880 ~ 1920	1880 ~ 1920	Tx: 9404 ~ 9596 Rx: 9404 ~ 9596	0 MHz
LTE 2100 – B1	1920 ~ 1980	2110 ~ 2170	Tx: 18000 ~ 18599 Rx: 0 ~ 599	190 MHz
LTE 1900 – B2	1850 ~ 1910	1930 ~ 1990	Tx: 18600 ~ 19199 Rx: 600 ~ 1199	80 MHz
LTE 1800 – B3	1710 ~ 1785	1805 ~ 1880	Tx: 19200 ~ 19949 Rx: 1200 ~ 1949	95 MHz
LTE AWS – B4	1710 ~ 1755	2110 ~ 2155	Tx: 19950 ~ 20399 Rx: 1950 ~ 2399	400 MHz
LTE 850 – B5	824 ~ 849	869 ~ 894	Tx: 20400 ~ 20649 Rx: 2400 ~ 2649	45 MHz
LTE 2600 – B7	2500 ~ 2570	2620 ~ 2690	Tx: 20750 ~ 21449 Rx: 2750 ~ 3449	120 MHz
LTE 900 – B8	880 ~ 915	925 ~ 960	Tx: 21450 ~ 21799 Rx: 3450 ~ 3799	45 MHz
LTE 1800 – B9	1749.9 ~ 1784.9	1844.9 ~ 1879.9	Tx: 21800 ~ 2149 Rx: 3800 ~ 4149	95 MHz
LTE AWS+ – B10	1710 ~ 1770	2110 ~ 2170	Tx: 22150 ~ 22749 Rx: 4150 ~ 4749	400 MHz
LTE 700a – B12	699 ~ 716	729 ~ 746	Tx : 23010 ~ 23179 Rx : 5010 ~ 5179	30 MHz
LTE 700c – B13	777 ~ 787	746 ~ 756	Tx : 27210 ~ 27659 Rx : 9210 ~ 9659	-31 MHz
LTE 700b – B17	704 ~ 716	734 ~ 746	Tx: 23730 ~ 23849 Rx: 5730 ~ 5849	30 MHz

Mode	Freq. Tx (MHz)	Freq. Rx (MHz)	Channels	Tx-Rx Offset
LTE 800 – B19	830 ~ 845	875 ~ 890	Tx: 24000 ~ 24149 Rx: 6000 ~ 6149	45 MHz
LTE 800 – B20	832 ~ 862	791 ~ 821	Tx: 24150 ~ 24449 Rx: 6150 ~ 6449	-41 MHz
LTE 1500 – B21	1447.9 ~ 1462.9	1495.9 ~ 1510.9	Tx: 24450 ~ 24599 Rx: 6450 ~ 6599	48 MHz
LTE 850+ – B26	814 ~ 849	859 ~ 894	Tx: 26690 ~ 27039 Rx: 8690 ~ 9039	45 MHz
LTE 700 – B28	703 ~ 748	758 ~ 803	Tx : 27210 ~ 27659 Rx : 9210 ~ 9659	55 MHz
LTE 700 – B28A	703 ~ 733	758 ~ 788	Tx: 27210 ~ 27510 Rx: 9210 ~ 9510	55 MHz
LTE TDD 2600 – B38	2570 ~ 2620	2570 ~ 2620	Tx: 37750 ~ 38250 Rx: 37750 ~ 38250	0 MHz
LTE TDD 1900 – B39	1880 ~ 1920	1880 ~ 1920	Tx: 38250 ~ 38650 Rx: 38250 ~ 38650	0 MHz
LTE TDD 2300 – B40	2300 ~ 2400	2300 ~ 2400	Tx: 38650 ~ 39650 Rx: 38650 ~ 39650	0 MHz
LTE TDD 2500 – B41M	2555 ~ 2655	2555 ~ 2655	Tx: 40265 ~ 41215 Rx: 40265 ~ 41215	0 MHz

2.7. RF parameters

2.7.1. Sensitivity

The module's typical sensitivity levels are as follows:

- -108 dBm @ 2G
- -113 dBm @ 3G/TD-SCDMA
- -102 dBm @ 4G FDD/TDD (BW=5 MHz)

2.7.2. Output power

LE920A4 typical values for Max output level are as follow:

- **2G:**
  - LB: 33dBm
  - HB: 30dBm
- **3G/TD-SCDMA:** 24dBm
- **4G (FDD & TDD):**23dBm @1RB.

2.8. Mechanical Dimensions

The module's overall dimensions are as follows:

- Length: 34 mm, +/- 0.15 mm tolerance
- Width: 40 mm, +/- 0.15 mm tolerance
- Thickness: 2.9 mm, +/- 0.15 mm tolerance

NOTE:
A typical label thickness of 0.11 mm should be considered in addition to the module thickness

2.9. Weight

The nominal weight of the module is 9.0 gram.

3. Module Connections

3.1. Pin-out

Table 7: Pin-out

PAD	Signal	I/O	Function	Type	Comment
USB HS 2.0 Communication Port					
D19	USB_D+	I/O	USB differential data(+)		
F19	USB_D-	I/O	USB differential data(-)		
A18	USB_VBUS	AI	Power sense for the internal USB transceiver	Power	
B19	USB_ID	AI	USB ID for supporting USB2.0 OTG		
Asynchronous UART					
AH19	C103/TXD	I	Serial data input (TXD) from DTE	1.8V	
AF19	C104/RXD	O	Serial data output to DTE	1.8V	
AA18	C105/RTS	I	Input for Request To Send signal (RTS) from DTE	1.8V	
AK19	C106/CTS	O	Output for Clear To Send signal (CTS) to DTE	1.8V	
AG18	C107/DSR	O	Output for Data Set Ready (DSR) to DTE	1.8V	
AC18	C108/DTR	I	Input for Data Terminal Ready (DTR) from DTE	1.8V	
AE18	C109/DCD	O	Output for Data Carrier Detect (DCD) to DTE	1.8V	
AJ18	C125/RING	O	Output for Ring Indication (RI) to DTE	1.8V	
Asynchronous Auxiliary UART					
AB19	TX_AUX	O	Auxiliary UART (Tx Data to DTE)	1.8V	
AD19	RX_AUX	I	Auxiliary UART (Rx Data from DTE)	1.8V	
SPI – Serial Peripheral Interface					
P19	SPI_CLK	O	SPI clock output	1.8V	
M19	SPI_MISO	I	SPI data Master Input Slave Output	1.8V	

PAD	Signal	I/O	Function	Type	Comment
K19	SPI_MOSI	O	SPI data Master Output Slave Input	1.8V	
N18	SPI_CS	O	SPI chip select output	1.8V	
SD/MMC Card Interface					
AH17	SD/MMC_CMD	I/O	SD command	1.8/2.95V	
AD17	SD/MMC_CLK	O	SD card clock	1.8/2.95V	
Y17	SD/MMC_DATA0	I/O	SD Serial Data 0	1.8/2.95V	
AF17	SD/MMC_DATA1	I/O	SD Serial Data 1	1.8/2.95V	
AB17	SD/MMC_DATA2	I/O	SD Serial Data 2	1.8/2.95V	
W17	SD/MMC_DATA3	I/O	SD Serial Data 3	1.8/2.95V	
U17	SD/MMC_CD	I	SD card detect input	1.8V	Active Low
S17	VMMC	-	Power supply for MMC card pull-up resistors	1.8/2.95V	
WiFi (SDIO) Interface					
AB3	WiFi_SD_CMD	I/O	WiFi SD command	1.8V	
AM3	WiFi_SD_CLK	O	WiFi SD clock	1.8V	
AD3	WiFi_SD_DATA0	I/O	WiFi SD Serial Data 0	1.8V	
AF3	WiFi_SD_DATA1	I/O	WiFi SD Serial Data 1	1.8V	
AH3	WiFi_SD_DATA2	I/O	WiFi SD Serial Data 2	1.8V	
AK3	WiFi_SD_DATA3	I/O	WiFi SD Serial Data 3	1.8V	
Y3	WiFi_SDRST	O	WiFi Reset / Power enable control	1.8V	Active Low
AA4	WLAN_SLEEP_CLK	O	WiFi Sleep clock output	1.8V	
X4	RFCLK2_QCA	O	WiFi low-noise RF clock output	1.8V	

PAD	Signal	I/O	Function	Type	Comment
LTE-WiFi Coexistence					
AS3	WCI_TX	O	Wireless coexistence interface TXD	1.8V	
AT2	WCI_RX	I	Wireless coexistence interface RXD	1.8V	
SIM Card Interface 1					
A10	SIMCLK1	O	External SIM 1 signal – Clock	1.8/2.85V	
B11	SIMRST1	O	External SIM 1 signal – Reset	1.8/2.85V	
B9	SIMIO1	I/O	External SIM 1 signal - Data I/O	1.8/2.85V	Internally PU 10kΩ to SIMVCC1
B7	SIMIN1	I	External SIM1 signal - Presence	1.8V	Active low
A8	SIMVCC1	-	External SIM1 signal – power supply for SIM1	1.8/2.85V	
E8	Reserved for ESIM_RST	I	Reserved for eSIM signal – Reset	1.8/2.85V	Reserved
SIM Card Interface 2					
C16	SIMCLK2	O	External SIM 2 signal – Clock	1.8/2.85V	
D17	SIMRST2	O	External SIM 2 signal – Reset	1.8/2.85V	
E16	SIMIO2	I/O	External SIM 2 signal – Data I/O	1.8/2.85V	Internally PU 10kΩ to SIMVCC2
C18	SIMIN2	I	External SIM 2 signal – Presence	1.8V	Active low
D15	SIMVCC2	-	External SIM2 signal – Power supply for SIM2	1.8/2.85V	
Analog Audio interface					
B5	EAR1_MT+	AO	Earphone signal output1, phase +	Audio	
A4	EAR1_MT-	AO	Earphone signal output1, phase -	Audio	
B3	MIC1_MT+	AI	Mic signal input1, phase +	Audio	
A2	MIC1_MT-	AI	Mic signal input1, phase -	Audio	
G6	MICBIAS	AO	Mic BIAS	Audio	
E2	EAR2_MT+	AO	Earphone signal output2, phase +	Audio	

PAD	Signal	I/O	Function	Type	Comment
D1	EAR2_MT-	AO	Earphone signal output2, phase -	Audio	
C2	MIC2_MT+	AI	Mic signal input2, phase +	Audio	
B1	MIC2_MT-	AI	Mic signal input2, phase -	Audio	
Digital Voice Interface (DVI)					
D11	DVI_WA0	O	Digital Voice interface (WA0 master output)	1.8V	
C8	DVI_RX	I	Digital Voice interface (Rx)	1.8V	
D9	DVI_TX	O	Digital Voice interface (Tx)	1.8V	
C10	DVI_CLK	O	Digital Voice interface (CLK master output)	1.8V	
C12	REF_CLK	O	Reference clock for external Codec	1.8V	
General Purpose Digital I/O					
F9	GPIO_01	I/O	GPIO_01	1.8V	Alternate Fn I2C
E10	GPIO_02	I/O	GPIO_02	1.8V	Alternate Fn I2C
F11	GPIO_03	I/O	GPIO_03	1.8V	Alternate Fn I2C
E12	GPIO_04	I/O	GPIO_04	1.8V	Alternate Fn I2C
F13	GPIO_05	I/O	GPIO_05	1.8V	Alternate Fn I2C
E14	GPIO_06	I/O	GPIO_06	1.8V	Alternate Fn I2C
W19	GPIO_10	I/O	GPIO_10	1.8V	Alternate Fn I2C
AN4	GPIO_20	I/O	GPIO_20	1.8V	
RF Section					
AD1	Antenna	I/O	GSM/EDGE/UMTS/LTE main antenna (50 Ohm)	RF	
AU9	ANT_DIV	I	UMTS/LTE antenna diversity input (50 Ohm)	RF	

PAD	Signal	I/O	Function	Type	Comment
GPS Section					
S1	ANT_GPS	I	GPS antenna (50 Ohm)	RF	
V2	GPS_LNA_EN	O	Enables the external regulator for GPS LNA	1.8V	
W3	GPS_SYNC	O	GPS sync signal for Dead Reckoning	1.8V	
Miscellaneous Functions					
AN8	RESET_N	I	Reset input		Active low
AS1	ON_OFF_N	I	Power ON / Power OFF input		Active low
AN12	SHDN_N	I	Unconditional Shutdown input		Active low
P17	VAUX/PWRM ON	O	Supply output for external accessories / Power ON monitor	1.8V	
D5	ADC_IN1	AI	Analog/Digital Converter Input 1	Analog	
E6	ADC_IN2	AI	Analog/Digital Converter Input 2	Analog	
F7	ADC_IN3	AI	Analog/Digital Converter Input 3	Analog	
AU3	STAT_LED	O	Status Indicator LED	1.8V	
AN10	SW_RDY	O	Indicates that the boot sequence has completed successfully	1.8V	
SGMII Interface					
ZZ11	SGMII_RX_P	AI	SGMII receive - plus	PHY	
ZZ13	SGMII_RX_M	AI	SGMII receive - minus	PHY	
ZZ15	SGMII_TX_P	AO	SGMII transmit - plus	PHY	
ZZ17	SGMII_TX_M	AO	SGMII transmit - minus	PHY	
Ethernet PHY Control Interface					
G14	MAC_MDC	O	MAC to PHY Clock	2.85V	
G12	MAC_MDIO	I/O	MAC to PHY Data	2.85V	
G8	ETH_RST_N	O	Ethernet PHY Reset	2.85V	
G10	ETH_INT_N	I	Ethernet PHY Interrupt	1.8V	

PAD	Signal	I/O	Function	Type	Comment
HSIC Interface					
A14	HSIC_DATA	I/O	High-speed inter-chip interface - data	1.2V	Optional
A16	HSIC_STB	I/O	High-speed inter-chip interface - strobe	1.2V	Optional
I2C Interface					
C14	I2C_SCL	I/O	I2C clock	1.8V	Internal PU 2.2 kΩ to 1.8V
D13	I2C_SDA	I/O	I2C Data	1.8V	Internal PU 2.2 kΩ to 1.8V
Power Supply					
AP17	VBATT	-	Main Power Supply (Digital Section)	Power	
AP19	VBATT	-	Main Power Supply (Digital Section)	Power	
AR18	VBATT	-	Main Power Supply (Digital Section)	Power	
AR20	VBATT	-	Main Power Supply (Digital Section)	Power	
AS17	VBATT_PA	-	Main Power Supply (RF Section)	Power	
AS19	VBATT_PA	-	Main Power Supply (RF Section)	Power	
AT18	VBATT_PA	-	Main Power Supply (RF Section)	Power	
AU17	VBATT_PA	-	Main Power Supply (RF Section)	Power	
AU19	VBATT_PA	-	Main Power Supply (RF Section)	Power	
AT20	VBATT_PA	-	Main Power Supply (RF Section)	Power	
A0	GND	-	Ground		
N0	GND		Ground		
R0	GND	-	Ground		
T0	GND	-	Ground		
V0	GND	-	Ground		
X0	GND	-	Ground		

PAD	Signal	I/O	Function	Type	Comment
AA0	GND	-	Ground		
AC0	GND	-	Ground		
AE0	GND	-	Ground		
AG0	GND	-	Ground		
AJ0	GND	-	Ground		
AL0	GND	-	Ground		
AN0	GND	-	Ground		
AR0	GND	-	Ground		
AV0	GND	-	Ground		
ZZ1	GND	-	Ground		
F1	GND	-	Ground		
M1	GND	-	Ground		
P1	GND	-	Ground		
U1	GND	-	Ground		
W1	GND	-	Ground		
Y1	GND	-	Ground		
AB1	GND	-	Ground		
AF1	GND	-	Ground		
AH1	GND	-	Ground		
AK1	GND	-	Ground		
AU1	GND	-	Ground		
N2	GND	-	Ground		
R2	GND	-	Ground		
T2	GND	-	Ground		
X2	GND	-	Ground		
AA2	GND	-	Ground		
AC2	GND	-	Ground		
AE2	GND	-	Ground		

PAD	Signal	I/O	Function	Type	Comment
AG2	GND	-	Ground		
AJ2	GND	-	Ground		
AL2	GND	-	Ground		
AN2	GND	-	Ground		
AR2	GND	-	Ground		
D3	GND	-	Ground		
P3	GND	-	Ground		
AP3	GND	-	Ground		
C4	GND	-	Ground		
AR4	GND	-	Ground		
AT4	GND	-	Ground		
AP5	GND	-	Ground		
AS5	GND	-	Ground		
AU5	GND	-	Ground		
A6	GND	-	Ground		
C6	GND	-	Ground		
AR6	GND	-	Ground		
AT6	GND	-	Ground		
D7	GND	-	Ground		
AP7	GND	-	Ground		
AS7	GND	-	Ground		
AU7	GND	-	Ground		
T8	GND	-	Ground		
V8	GND	-	Ground		
X8	GND	-	Ground		
AA8	GND	-	Ground		
AR8	GND	-	Ground		
AT8	GND	-	Ground		

PAD	Signal	I/O	Function	Type	Comment
AV8	GND	-	Ground		
U9	GND	-	Ground		
W9	GND	-	Ground		
Y9	GND	-	Ground		
AP9	GND	-	Ground		
AS9	GND	-	Ground		
T10	GND	-	Ground		
V10	GND	-	Ground		
X10	GND	-	Ground		
AA10	GND	-	Ground		
AR10	GND	-	Ground		
AT10	GND	-	Ground		
AV10	GND	-	Ground		
U11	GND	-	Ground		
W11	GND	-	Ground		
Y11	GND	-	Ground		
AP11	GND	-	Ground		
AS11	GND	-	Ground		
AU11	GND	-	Ground		
A12	GND	-	Ground		
T12	GND	-	Ground		
V12	GND	-	Ground		
X12	GND	-	Ground		
AA12	GND	-	Ground		
AR12	GND	-	Ground		
AT12	GND	-	Ground		
AV12	GND	-	Ground		
B13	GND	-	Ground		

PAD	Signal	I/O	Function	Type	Comment
AP13	GND	-	Ground		
AS13	GND	-	Ground		
AR14	GND	-	Ground		
AT14	GND	-	Ground		
AV14	GND	-	Ground		
B15	GND	-	Ground		
AP15	GND	-	Ground		
AS15	GND	-	Ground		
AU15	GND	-	Ground		
AN16	GND	-	Ground		
AR16	GND	-	Ground		
AT16	GND	-	Ground		
AV16	GND	-	Ground		
B17	GND	-	Ground		
AK17	GND	-	Ground		
AM17	GND	-	Ground		
E18	GND	-	Ground		
G18	GND	-	Ground		
T18	GND	-	Ground		
V18	GND	-	Ground		
X18	GND	-	Ground		
AL18	GND	-	Ground		
AN18	GND	-	Ground		
AV18	GND	-	Ground		
ZZ19	GND	-	Ground		
H19	GND	-	Ground		
Y19	GND	-	Ground		
AM19	GND	-	Ground		

PAD	Signal	I/O	Function	Type	Comment
A20	GND	-	Ground		
L20	GND	-	Ground		
N20	GND	-	Ground		
AV20	GND	-	Ground		
Reserved					
C0	Reserved	-	Reserved		
E0	Reserved	-	Reserved		
G0	Reserved	-	Reserved		
J0	Reserved	-	Reserved		
L0	Reserved	-	Reserved		
AT0	Reserved	-	Reserved		
K1	Reserved	-	Reserved		
AM1	Reserved	-	Reserved		
G2	Reserved	-	Reserved		
J2	Reserved	-	Reserved		
L2	Reserved	-	Reserved		
AV2	Reserved	-	Reserved		
ZZ3	Reserved	-	Reserved		
F3	Reserved	-	Reserved		
H3	Reserved	-	Reserved		
K3	Reserved	-	Reserved		
M3	Reserved	-	Reserved		
S3	Reserved	-	Reserved		
U3	Reserved	-	Reserved		
E4	Reserved	-	Reserved		
G4	Reserved	-	Reserved		
J4	Reserved	-	Reserved		
L4	Reserved	-	Reserved		

PAD	Signal	I/O	Function	Type	Comment
N4	Reserved	-	Reserved		
R4	Reserved	-	Reserved		
T4	Reserved	-	Reserved		
V4	Reserved	-	Reserved		
AG4	Reserved	-	Reserved		
AJ4	Reserved	-	Reserved		
AL4	Reserved	-	Reserved		
AV4	Reserved	-	Reserved		
ZZ5	Reserved	-	Reserved		
F5	Reserved	-	Reserved		
AM5	Reserved	-	Reserved		
AN6	Reserved	-	Reserved		
AV6	Reserved	-	Reserved		
ZZ7	Reserved	-	Reserved		
AM7	Reserved	-	Reserved		
AP1	Reserved	-	Reserved for RESET_N in case that backward compatibility to LE920 is needed (instead of Pad AN8)		Refer to Sec. 5.4
ZZ9	Reserved	-	Reserved		
AM9	Reserved	-	Reserved		
AM11	Reserved	-	Reserved		
AM13	Reserved	-	Reserved		
AU13	Reserved	-	Reserved		
AN14	Reserved	-	Reserved		
F15	Reserved	-	Reserved		
AM15	Reserved	-	Reserved		
G16	Reserved	-	Reserved		
J16	Reserved	-	Reserved		

PAD	Signal	I/O	Function	Type	Comment
L16	Reserved	-	Reserved		
N16	Reserved	-	Reserved		
R16	Reserved	-	Reserved		
T16	Reserved	-	Reserved		
V16	Reserved	-	Reserved		
X16	Reserved	-	Reserved		
AA16	Reserved	-	Reserved		
AC16	Reserved	-	Reserved		
AE16	Reserved	-	Reserved		
AG16	Reserved	-	Reserved		
AJ16	Reserved	-	Reserved		
AL16	Reserved	-	Reserved		
F17	Reserved	-	Reserved		
H17	Reserved	-	Reserved		
K17	Reserved	-	Reserved		
M17	Reserved	-	Reserved		
C20	Reserved	-	Reserved		
E20	Reserved	-	Reserved		
G20	Reserved	-	Reserved		
J20	Reserved	-	Reserved		
R20	Reserved	-	Reserved		
T20	Reserved	-	Reserved		
V20	Reserved	-	Reserved		
X20	Reserved	-	Reserved		
AA20	Reserved	-	Reserved		
AC20	Reserved	-	Reserved		
AE20	Reserved	-	Reserved		
AG20	Reserved	-	Reserved		

PAD	Signal	I/O	Function	Type	Comment
AJ20	Reserved	-	Reserved		
AL20	Reserved	-	Reserved		
AN20	Reserved	-	Reserved		
R18	Reserved	-	Reserved		
S19	Reserved	-	Reserved		
U19	Reserved	-	Reserved		
L18	Reserved	-	Reserved		
J18	Reserved	-	Reserved		
H1	Reserved	-	Reserved		
AE4	Reserved	-	Reserved		
AC4	Reserved	-	Reserved		

WARNING:
GPIO_20 and WCI_RX are used as special HW flags during boot.
If they are used as GPIOs, they must be connected via a 3-state buffer to avoid any undesirable effect during the boot.

NOTE:
When the UART signals are used as the communication port between the Host and the Modem, RTS must be connected to GND (on the module side) if flow control is not used.
If the UART port is not used, UART signals can be left floating.

NOTE:
Unless otherwise specified, RESERVED pins must be left unconnected (floating).
The only exceptions are listed in the Section 3.2, Signals That Must Be Connected.

3.2. Signals That Must Be Connected

Table 8 lists the signals that must be connected even if not used by the end application.

Table 8: Mandatory Signals

PAD	Signal	Notes
AP17, AP19, AR18, AR20, AS17, AS19, AT18, AU17, AU19, AT20	VBATT & VBATT_PA	
A0, N0, R0, T0, V0, X0, AA0, AC0, AE0, AG0, AJ0, AL0, AN0, AR0, AV0, ZZ1, F1, M1, P1, U1, W1, Y1, AB1, AF1, AH1, AK1, AU1, N2, R2, T2, X2, AA2, AC2, AE2, AG2, AJ2, AL2, AN2, AR2, D3, P3, AP3, C4, AR4, AT4, AP5, AS5, AU5, A6, C6, AR6, AT6, D7, AP7, AS7, AU7, T8, V8, X8, AA8, AR8, AT8, AV8, U9, W9, Y9, AP9, AS9, T10, V10, X10, AA10, AR10, AT10, AV10, U11, W11, Y11, AP11, AS11, AU11, A12, T12, V12, X12, AA12, AR12, AT12, AV12, B13, AP13, AS13, AR14, AT14, AV14, B15, AP15, AS15, AU15, AN16, AR16, AT16, AV16, B17, AK17, AM17, E18, G18, T18, V18, X18, AL18, AN18, AV18, ZZ19, H19, Y19, AM19, A20, L20, N20, AV20	GND	
AS1	ON/OFF	Main power on off signal
AN12	SHDN_N	Emergency power off
D19	USB_D+	If not used, connect to a test point or an USB connector
F19	USB_D-	If not used, connect to a test point or an USB connector
A18	USB_VBUS	If not used, connect to a test point or an USB connector

PAD	Signal	Notes
AH19	C103/TXD	If not used, connect to a test point
AF19	C104/RXD	If not used, connect to a test point
AA18	C105/RTS	If flow control is not used, connect to GND
AK19	C106/CTS	If not used, connect to a test point
AB19	TX_AUX	If not used, connect to a test point
AD19	RX_AUX	If not used, connect to a test point
AD1	Antenna	MAIN antenna
AU9	ANT_DIV	
S1	ANT_GPS	
J2, L2, F3, H3, K3, E4, AN14	Reserved	Connect to a test point for Titan internal use
AN4	GPIO_20	If not used, connect to a test point
AT2	WCI_RX	If not used, connect to a test point
AS1	ON/OFF	Main power on off signal
AN12	SHDN_N	Emergency power off
D19	USB_D+	If not used, connect to a test point or an USB connector
F19	USB_D-	If not used, connect to a test point or an USB connector
A18	USB_VBUS	If not used, connect to a test point or an USB connector
AK19	C106/CTS	If not used, connect to a test point

PAD	Signal	Notes
AB19	TX_AUX	If not used, connect to a test point
AD19	RX_AUX	If not used, connect to a test point
AD1	Antenna	MAIN antenna
AU9	ANT_DIV	
S1	ANT_GPS	
J2, L2, F3, H3, K3, E4, AN14	Reserved	Connect to a test point for Titan internal use
AN4	GPIO_20	If not used, connect to a test point
AT2	WCI_RX	If not used, connect to a test point

3.3. LE920A4 LGA Pads Layout

Figure 2: LGA Pads Layout

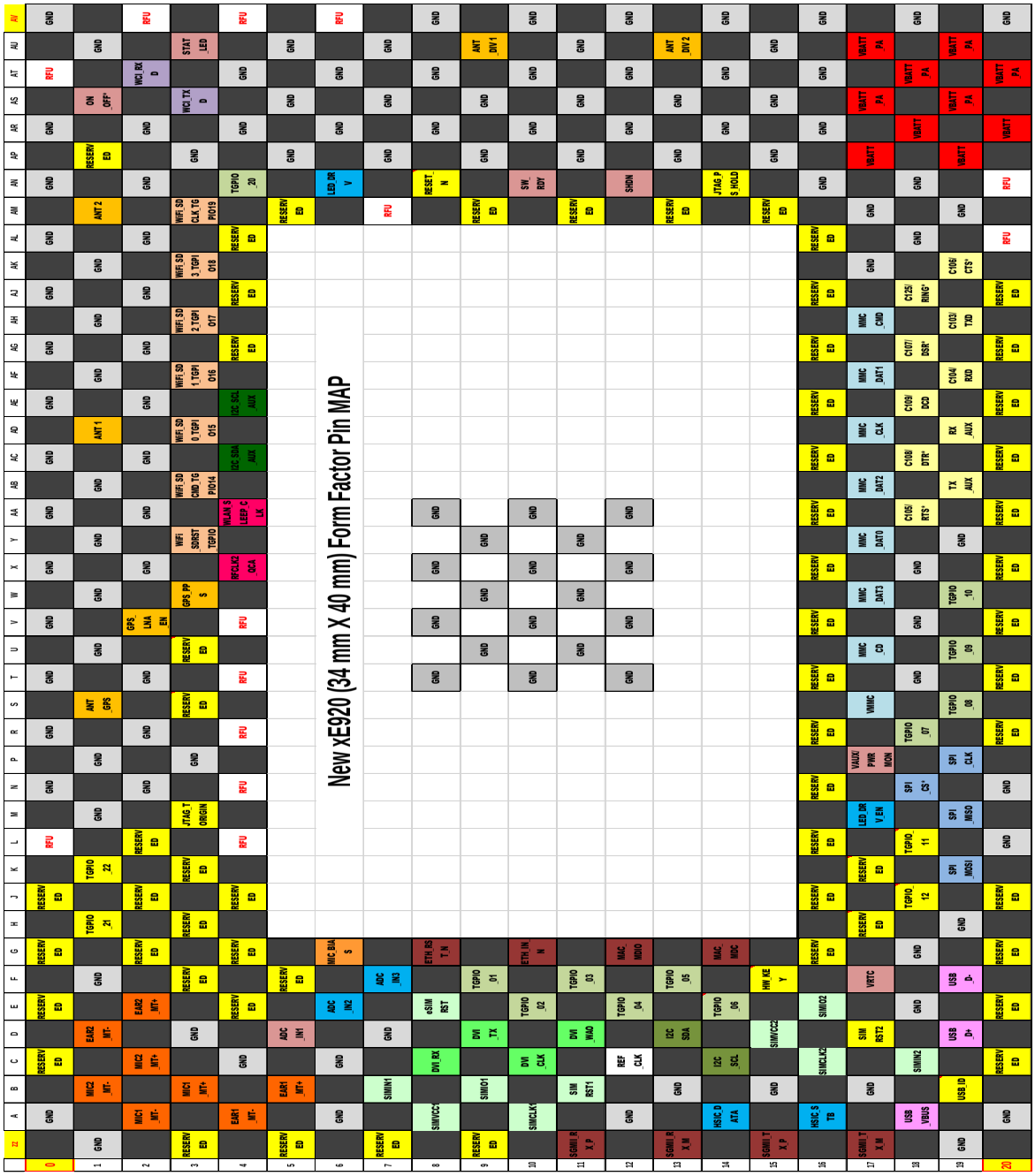

4. Electrical Specifications

4.1. Absolute Maximum Ratings – Not Operational

WARNING:
A deviation from the value ranges listed below may harm the module.

Table 9: Absolute Maximum Ratings – Not Operational

Symbol	Parameter	Min	Max	Unit
VBATT	Battery supply voltage on VBATT pin	-0.5	+6.0	[V]
VBATT TRANSIENT	Transient voltage on pin VBATT (< 10 ms)	-0.5	+7.0	[V]
VBATT_PA	Battery supply voltage on VBATT_PA pin	-0.3	+6.0	[V]

4.2. Recommended Operating Conditions

Table 10: Recommended Operating Conditions

Symbol	Parameter	Min	Typ	Max	Unit
T_{amb}	Ambient temperature	-40	+25	+85	[°C]
VBATT	Battery supply voltage on VBATT pin	3.4	3.8	4.2	[V]
VBATT_PA	Battery supply voltage on VBATT_PA pin	3.4	3.8	4.2	[V]
$I_{BATT_PA} + I_{BATT}$	Peak current to be used to dimension decoupling capacitors on VBATT_PA pin	-	80	2000	[mA]

4.3. Logic Level Specifications

Unless otherwise specified, all the interface circuits of the module are 1.8V CMOS logic. Only few specific interfaces (such as USIM and SD Card) are capable of dual voltage I/O.

The following tables show the logic level specifications used in the module's interface circuits. The data specified in the tables below is valid throughout all drive strengths and the entire temperature ranges.

NOTE:
Do not connect the module's digital logic signals directly to the OEM's digital logic signals with a level higher than 2.7V for 1.8V CMOS signals.

4.3.1. 1.8V Pads - Absolute Maximum Ratings

Table 11: Absolute Maximum Ratings - Not Functional

Parameter	Min	Max
Input level on any digital pin when on	-0.3V	+2.16V
Input voltage on analog pins when on	-0.3V	+2.16 V

4.3.2. 1.8V Standard GPIOs

Table 12: Operating Range – Interface Levels (1.8V CMOS)

Pad	Parameter	Min	Max	Unit	Comment
VIH	Input high level	1.25V	--	[V]	
VIL	Input low level	--	0.6V	[V]	
VOH	Output high level	1.4V	--	[V]	
VOL	Output low level	--	0.45V	[V]	
IIL	Low-level input leakage current	-1	--	[uA]	No pull-up
IIH	High-level input leakage current	--	+1	[uA]	No pull-down
RPU	Pull-up resistance	30	390	[kΩ]	See Note
RPD	Pull-down resistance	30	390	[kΩ]	See Note
Ci	Input capacitance	--	5	[pF]	

NOTE:
Pull-up and Pull-down resistance of GPIO5 is different from those mentioned above.
GPIO5 pull resistance is specified as 10KΩ to 50KΩ.

4.3.3. 1.8V SD Card Pads

Table 13: Operating Range – SD Card Pads Working at 1.8V

Pad	Parameter	Min	Max	Unit	Comment
VIH	Input high level	1.27V	2V	[V]	
VIL	Input low level	-0.3V	0.58V	[V]	
VOH	Output high level	1.4V	--	[V]	
VOL	Output low level	0	0.45V	[V]	
IIL	Low-level input leakage current	-2	-	[uA]	No pull-up
IIH	High-level input leakage current	-	2	[uA]	No pull-down
RPU	Pull-up resistance	10	100	[kΩ]	
RPD	Pull-down resistance	10	100	[kΩ]	
Ci	Input capacitance		5	[pF]	

4.3.4. 1.8V SIM Card Pads

Table 14: Operating Range – SIM Pads Working at 1.8V

Pad	Parameter	Min	Max	Unit	Comment
VIH	Input high level	1.35V	2V	[V]	
VIL	Input low level	-0.3V	0.43V	[V]	
VOH	Output high level	1.35V	1.875V	[V]	
VOL	Output low level	0V	0.4V	[V]	
IIL	Low-level input leakage current	-2	-	[uA]	No pull-up
IIH	High-level input leakage current	-	2	[uA]	No pull-down
RPU	Pull-up resistance	10	100	[kΩ]	
RPD	Pull-down resistance	10	100	[kΩ]	
Ci	Input capacitance		5	[pF]	

4.3.5. Dual Voltage Pads - Absolute Maximum Ratings

Table 15: Absolute Maximum Ratings - Not Functional

Parameter	Min	Max
Input level on any digital pin when on	-0.3V	+3.6V
Input voltage on analog pins when on	-0.3V	+3.6 V

4.3.6. SD Card Pads @ 2.95V

Table 16: Operating Range – For SD Card Pads Operating at 2.95V

Pad	Parameter	Min	Max	Unit	Comments
VIH	Input high level	1.9V	3.1V	[V]	
VIL	Input low level	-0.3V	0.7V	[V]	
VOH	Output high level	2.1V	3.05V	[V]	
VOL	Output low level	0V	0.4V	[V]	
IIL	Low-level input leakage current	-10		[uA]	No pull-up
IIH	High-level input leakage current		10	[uA]	No pull-down
RPU	Pull-up resistance	10	100	[kΩ]	
RPD	Pull-down resistance	10	100	[kΩ]	
Ci	Input capacitance		5	[pF]	

4.3.7. SIM Card Pads @2.95V

Table 17: Operating Range – For SIM Pads Operating at 2.95V

Pad	Parameter	Min	Max	Unit	Comment
VIH	Input high level	2.1V	3.1V	[V]	
VIL	Input low level	-0.3V	0.55V	[V]	
VOH	Output high level	2.25V	3.1V	[V]	
VOL	Output low level	0V	0.4V	[V]	
IIL	Low-level input leakage current	-10		[uA]	No pull-up
IIH	High-level input leakage current		10	[uA]	No pull-down
RPU	Pull-up resistance	10	100	[kΩ]	
RPD	Pull-down resistance	10	100	[kΩ]	
Ci	Input capacitance		5	[pF]	

5. Hardware Commands

5.1. Turning on the Module

To turn on the module, the ON/OFF pad must be asserted low for at least 1 second and then released.

The maximum current that can be drained from the ON/OFF pad is 0.1 mA. This pin is internally pulled up; customers should expect to see ~ 800 mV on the output.

Figure 3 illustrates a simple circuit to power on the module using an inverted buffer output.

Figure 3: Power-on Circuit

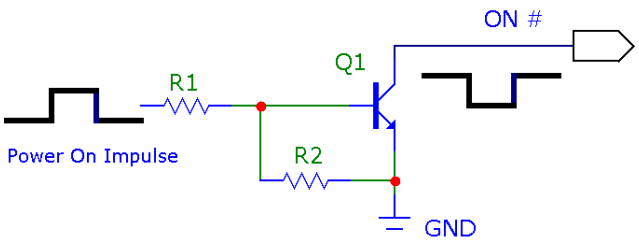

5.2. Initialization and Activation State

After turning on the module, the module is not yet activated because the SW initialization process of the module is still in process internally. It takes some time to fully complete the HW and SW initialization of the module.

For this reason, it is impossible to access the module during the Initialization state.

As shown in Figure 4, the module becomes operational (in the Activation state) at least 20 seconds after the assertion of ON_OFF.

NOTE:
During the Initialization state, AT commands are not available. The DTE host must wait for the Activation state prior to communicating with the module.

Figure 4: Module Initialization and Activation

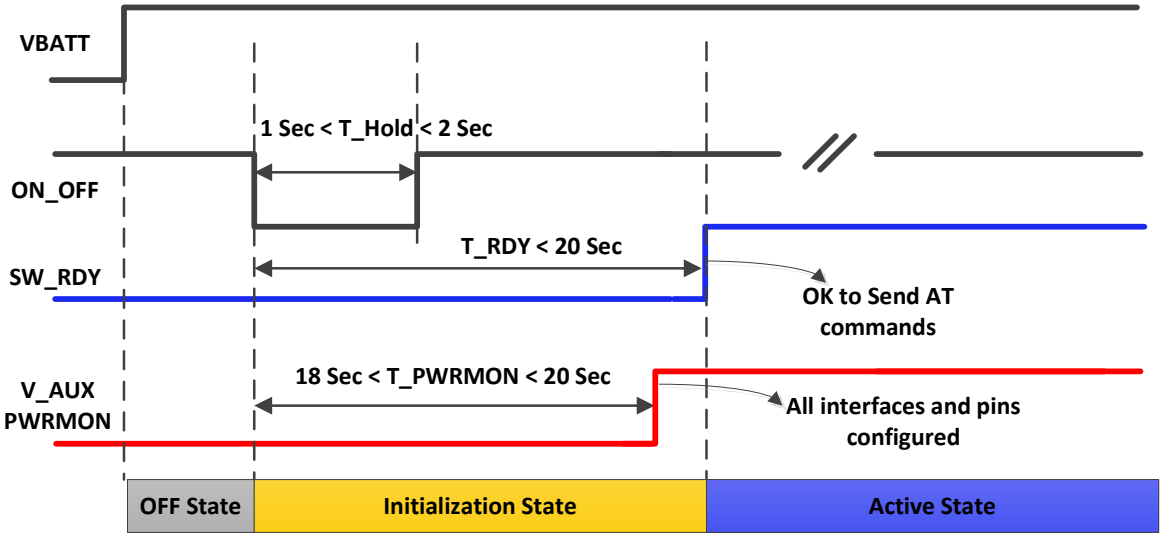

NOTE:
During SW initialization of the module, the SW configures all pads and interfaces to their desired mode. When PWRMON goes high, this indicates that the initialization of all I/O pads is completed.

NOTE:
To check whether the module has completely powered on, monitor the SW_RDY hardware line. When SW_RDY goes high, the module has completely powered on and is ready to accept AT commands.

NOTE:
Do not use any pull-up resistor on the ON_OFF line as it is internally pulled up. Using a pull-up resistor may cause latch-up problems on the module's power regulator and improper powering on/off of the module. The ON_OFF line must be connected only in an open collector configuration.

NOTE:
For systems not requiring controlled power ON/OFF, automatic power on can be supported by shorting the ON_OFF signal directly GND. In this case, the module will start power on sequence immediately after VBATT supply is applied

NOTE:
To avoid a back-powering effect, it is recommended not to apply any HIGH logic level signal to the digital pins of the module when it is powered OFF or during an ON/OFF transition.

NOTE:
Active low signals are labeled with a name that ends with "_N"

5.3. Turning off the Module

Turning off the device can be done in different ways:

- AT#SHDN software command
- Hardware shutdown using ON/OFF pad
- Hardware Unconditional Shutdown using the SHDN_N

When the device is shut down by a software command or a hardware shutdown (Using the ON_OFF pad), it issues a detach request to the network, informing the network that the device will not be reachable any more.

NOTE:
To check if the device has powered off, monitor the PWRMON hardware line. When PWRMON goes low, this indicates that the device has powered off.

NOTE:
To avoid a back-powering effect, it is recommended to avoid having any HIGH logic level signal applied to the digital pins of the module when it is powered OFF or during an ON/OFF transition.

NOTE:
Using RESET_N for resetting the module is not recommended.

5.3.1. Shutdown by Software Command

The module can be shut down by a software command.

When a shutdown command is sent, the module goes into the Finalization state and at the end of the finalization process shuts down PWRMON. The duration of the finalization state can differ according to the current situation of the module, so a value cannot be defined.

Usually, it will take more than 15 seconds from sending a shutdown command until reaching a complete shutdown. The DTE should monitor the status of PWRMON to observe the actual power-off.

Figure 5: Shutdown by Software Command

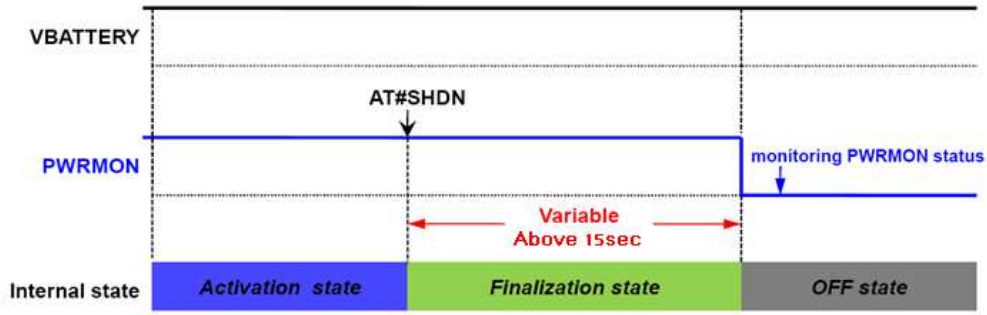

NOTE:
To check whether the device has powered off, monitor the PWRMON hardware line. When PWRMON goes low, the device has powered off.

5.3.2. Shutdown by ON/OFF Pad

To turn off the module, the ON/OFF pad must be asserted low for at least 2.5 seconds and then released. Use the same circuitry and timing for power-on.

When the hold time of ON/OFF is above 2.5 seconds, the module goes into the Finalization state and in the end shuts down PWRMON.

The duration of the Finalization state can differ according to the current situation of the module, so a value cannot be defined.

Usually, it will take more than 15 seconds from sending a shutdown command until reaching a complete shutdown. DTE should monitor the status of PWRMON to observe the actual power-off.

Figure 6: Hardware Shutdown via ON_OFF

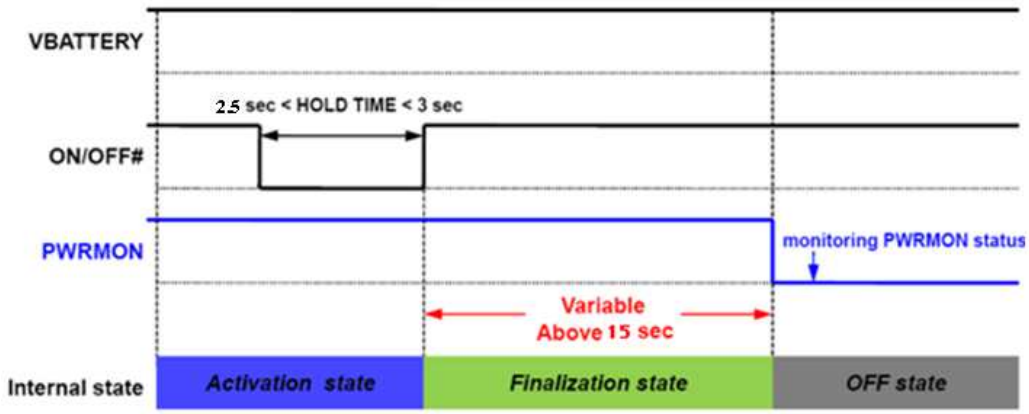

NOTE:
To check whether the device has powered off, monitor the PWRMON hardware line. When PWRMON goes low, the device has powered off.

5.3.3. Unconditional Hardware Shutdown via SHDN Pad

To unconditionally shut down the module, the SHDN_N pad must be tied low for at least 200 milliseconds and then released.

A simple circuit for applying unconditional shutdown is shown below:

Figure 7: Circuit for Unconditional Hardware Shutdown

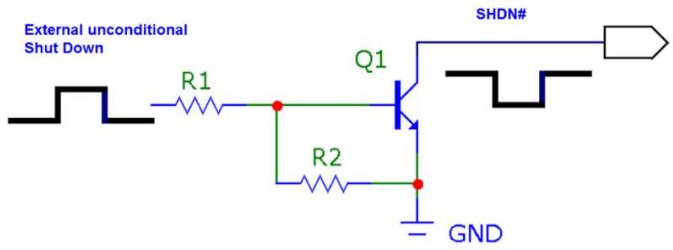

The system power down timing for using SHDN_N is shown below

Figure 8 Power down timing using SHDN_N

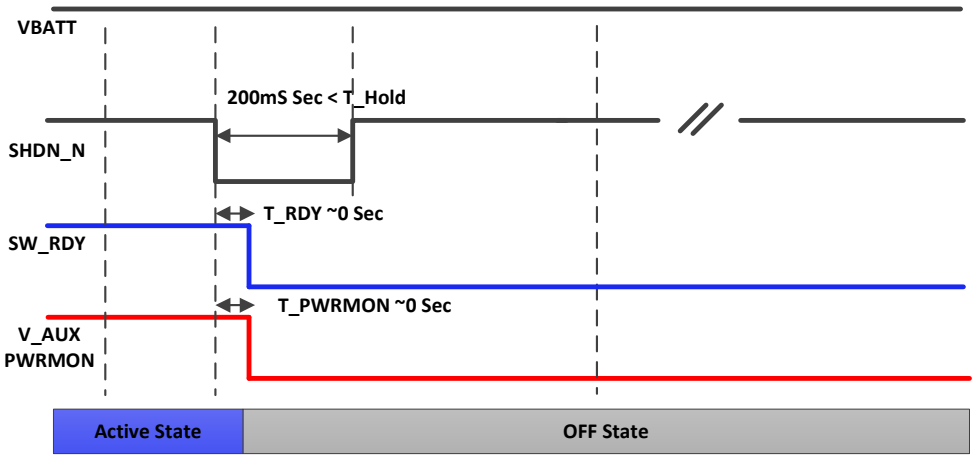

NOTE:
Do not use any pull-up resistor on the SHDN_N line or any totem pole digital output. Using a pull-up resistor may cause latch-up problems on the module's power regulator and improper functioning of the module. The SHDN_N line must be connected only in an open-collector configuration.

NOTE:
The Unconditional Hardware Shutdown must always be implemented on the boards, but the software must use it only as an emergency exit procedure, and not as a normal power-off operation.

5.4. Unconditional Hardware Reset

To unconditionally restart the module, the RESET_N pad must be asserted low for a period of 500-2000 milliseconds and then released.

Figure 9 shows a simple circuit for this action.

Figure 9: Circuit for Unconditional Hardware Reset

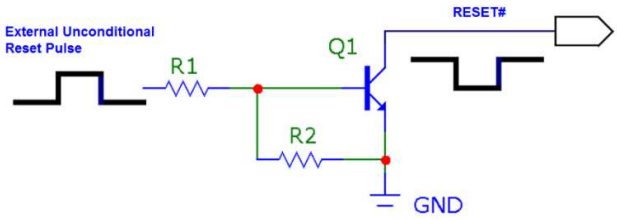

For keeping backward compatibility to LE920, it is recommended to prepare an alternate connection of the RESET_N pad also to Pad AP1 while keeping Pad AN8 as the default connection as is shown in below figure.

Figure 10: Alternate Connection of RESET_N Pad

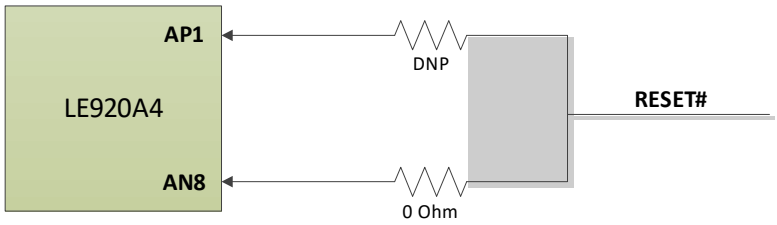

NOTE:
In general, using RESET_N is not recommended.
The Unconditional Hardware Reset must always be implemented on the boards, but the software must use it only as an emergency exit procedure, and not as a normal Reset operation.

NOTE:
Do not use any pull-up resistor on the RESET_N line or any totem pole digital output. Using a pull-up resistor may cause latch-up problems on the module's power regulator and improper functioning of the module. The RESET_N line must be connected only in an open-collector configuration.

NOTE:
Asserting t_{RESET} low for period longer than 2000 milliseconds will cause the module to shut down.

5.5. Powering OFF the Module

Powering OFF the module should be done gracefully allowing the module to complete all ongoing and pending tasks while properly handling all memory buffers.

In the case where a complete power supply shut down is needed, the following procedure should be followed:

1. Perform HW shut down as described in section 5.3
2. Wait for HW Shut down procedure to complete (monitor PWRMON pin)
3. Turn OFF power supply to the module

WARNING:

Please carefully follow the recommended procedure for shut down and power off.
Not following the recommended shut-down and power off procedures might damage the device and consequently void the warranty.

---

6. Power Supply

The power supply circuitry and board layout are very important parts of the full product design, with critical impact on the overall product performance. Read the following requirements and the guidelines carefully to ensure a good and proper design.

6.1. Power Supply Requirements

The module's power requirements are as follows:

Table 18: Power Supply Requirements

Nominal supply voltage	3.8V
Supply voltage range	3.4V – 4.2V
Max ripple on module input supply	30 mV

Table 19 provides typical current consumption values of the module for the various available modes.

Table 19: Current Consumption

Mode		Average (Typ.)	Mode Description
Switched Off			
Switched off		25 µA	Module supplied but switched off (RTC is on)
Idle Mode (Standby Mode; No Call in Progress)			
AT+CFUN=4		1.0 mA	Tx and Rx disabled; module is not registered on the network (Flight mode)
DRx	GSM	2.0 mA	DRx2
		1.4 mA	DRx5
	WCDMA	1.4 mA	DRx7
		1.2 mA	DRx8
	LTE	1.8 mA	Paging cycle #128 frames (1.28 sec DRx cycle)
		1.4 mA	Paging cycle #256 frames (2.56 sec DRx cycle)
Operative Mode (LTE)			
LTE (0 dBm)		190 mA	LTE CAT 4 Channel BW 20 MHz, RB=1, Tx = 0 dBm (Test case: BAND 1, Channel 300)

Mode	Average (Typ.)	Mode Description
LTE (22 dBm)	500 mA	LTE CAT 4 Channel BW 20 MHz, RB=1, Tx = 22 dBm (Test case: BAND 1, Channel 300)
Operative Mode (WCDMA)		
WCDMA Voice	200 mA	WCDMA voice call (Tx = 10 dBm)
WCDMA HSDPA (0 dBm)	150 mA	WCDMA data call (Cat 14, Tx = 0 dBm, Max throughput)
WCDMA HSDPA (22 dBm)	310 mA	WCDMA data call (Cat 14, Tx = 22 dBm, Max throughput)
Operative Mode (GSM)		
GSM Tx and Rx mode		
GSM900 PL5	250 mA	GSM voice call
DCS1800 PL0	170 mA	
GPRS 4 Tx + 1 Rx		
GSM900 PL5	430 mA	GPRS Sending Data mode (CS-4)
DCS1800 PL0	340 mA	

* Worst/best case depends on network configuration and is not under module control.

NOTE:
The electrical design for the power supply must ensure a peak current output of at least 2.0A.

NOTE:
In GSM/GPRS mode, RF transmission is not continuous, but is packed into bursts at a base frequency of about 216 Hz with relative current peaks as high as about 2.0A. Therefore, the power supply must be designed to withstand these current peaks without big voltage drops. This means that both the electrical design and the board layout must be designed for this current flow.
If the layout of the PCB is not well designed, a strong noise floor is generated on the ground. This will reflect on all the audio paths producing an audible annoying noise at 216 Hz.
If the voltage drops during the peaks, current absorption is too high. The device may even shut down as a consequence of the supply voltage drop.

6.2. General Design Rules

The principal guidelines for the Power Supply Design embrace three different design steps:

- Electrical design
- Thermal design
- PCB layout

6.2.1. Electrical Design Guidelines

The electrical design of the power supply depends strongly on the power source where this power is drained. Power sources can be distinguished by three categories:

- +5V input (typically PC internal regulator output)
- +12V input (typically automotive)
- Battery

6.2.1.1. + 5V Input Source Power Supply Design Guidelines

- The desired output for the power supply is 3.8V. So, the difference between the input source and the desired output is not big, and therefore a linear regulator can be used. A switching power supply is preferred to reduce power consumption.
- When using a linear regulator, a proper heat sink must be provided to dissipate the power generated.
- A bypass low ESR capacitor of adequate capacity must be provided to cut the current absorption peaks close to the module. A 100 µF tantalum capacitor is usually suitable (on both VBATT and VBATT_PA together).
- Make sure that the low ESR capacitor on the power supply output (usually a tantalum one) is rated at least 10V.
- A protection diode must be inserted close to the power input to protect the module from power polarity inversion.

Figure 11 shows an example of a linear regulator with 5V input.

Figure 11: Linear Regulator with 5V Input

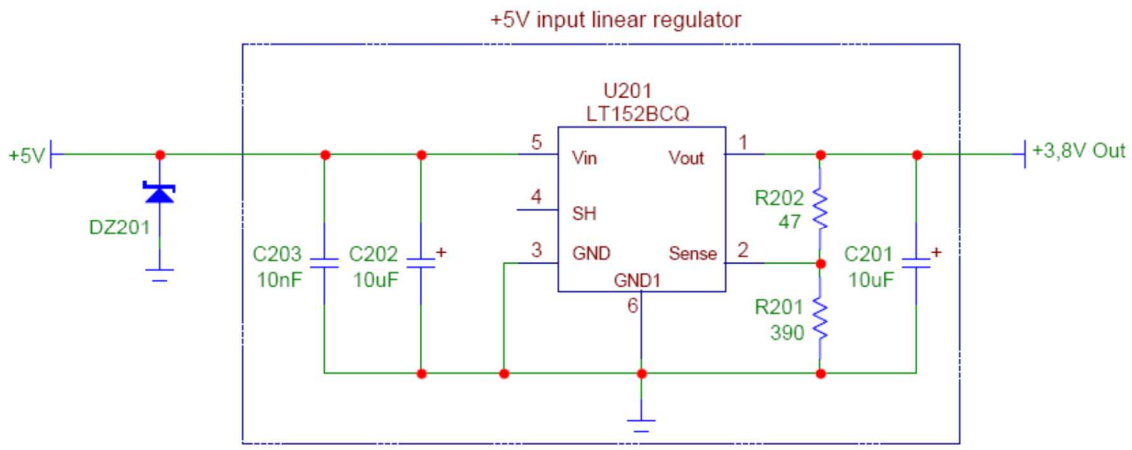

6.2.1.2. + 12V Input Source Power Supply Design Guidelines

- The desired output for the power supply is 3.8V. Due to the big difference between the input source and the desired output, a linear regulator is unsuitable and must not be used. A switching power supply is preferable because of its better efficiency, especially with the 2A peak current load which is expected during GSM Tx.
- When using a switching regulator, a 500-kHz or higher switching frequency regulator is preferable because of its smaller inductor size and its faster transient response. This allows the regulator to respond quickly to the current peaks absorption.
- In any case, the selection of the frequency and switching design is related to the application to be developed due to the fact that the switching frequency can also generate EMC interference.
- For car batteries (lead-acid accumulators) the input voltage can rise up to 15.8V. This must be kept in mind when choosing components: all components in the power supply must withstand this voltage.
- A bypass low ESR capacitor of adequate capacity must be provided to cut the current absorption peaks. A 100µF tantalum capacitor is usually suitable (on both VBATT and VBATT_PA together).
- Make sure that the low ESR capacitor on the power supply output (usually a tantalum one) is rated at least 10V.
- For automotive applications, a spike protection diode must be inserted close to the power input to clean the supply of spikes.
- A protection diode must be inserted close to the power input to protect the module from power polarity inversion. This can be the same diode as for spike protection.

Figure 12 and Figure 13 show an example of a switching regulator with 12V input.

Figure 12: Example of Switching Regulator with 12V Input – Part 1

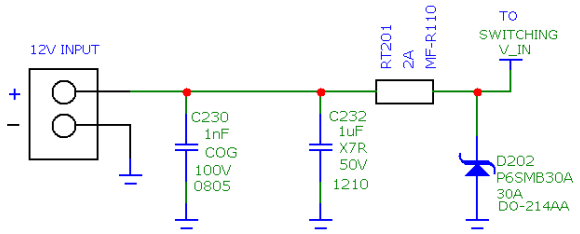

Figure 13: Example of Switching Regulator with 12V Input – Part 2

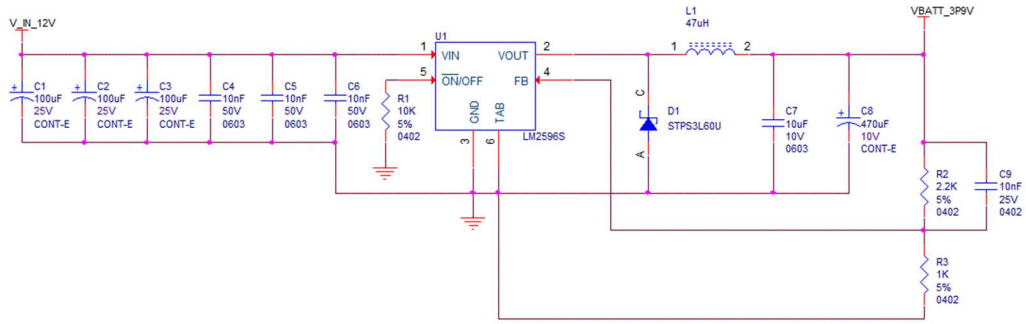

6.2.1.3. Battery Source Power Supply Design Guidelines

- The desired nominal output of the power supply is 3.8V, and the maximum allowed voltage is 4.2V. Hence, a single 3.7V Li-Ion cell battery type is suitable for powering the module.

WARNING:
Do not use any Ni-Cd, Ni-MH, and Pb battery types directly connected to the module. Their use can lead to overvoltage on the module and damage it. Use only Li-Ion battery types.

- A bypass low ESR capacitor of adequate capacity must be provided to cut the current absorption peaks; a 100µF tantalum capacitor is usually suitable (on both VBATT and VBATT_PA together).
- Make sure the low ESR capacitor (usually a tantalum one) is rated at least 10V.
- A protection diode must be inserted close to the power input to protect the module from power polarity inversion. Otherwise, the battery connector must be designed to avoid polarity inversions when connecting the battery.
- The battery capacity must be at least 500mAh to withstand the current peaks of 2A.

6.2.2. Thermal Design Guidelines

The thermal design for the power supply heat sink must be done with the following specifications:

- Average current consumption during RF transmission @PWR level max in the module as shown in Section 6.1, Power Supply Requirements
- Average current consumption during Class12 GPRS transmission for LE920A4-EU and LE920A4-CN variants / Class10 GPRS transmission for LE920A4-NA @PWR level max as shown in Section 6.1, Power Supply Requirements
- Average GPS current during GPS ON (Power Saving disabled) : 45 mA

NOTE:
The average consumption during transmissions depends on the power level at which the device has to transmit via the network. The average current consumption hence varies significantly.

NOTE:
The thermal design for the power supply must be made keeping an average consumption at the maximum transmitting level during calls of LTE/HSPA/GPRS plus average consumption in GPS Tracking mode.

Considering the very low current during Idle, especially if the Power Saving function is enabled, it is possible to consider from the thermal point of view that the device absorbs significant current only during an Active Call or Data session.

For the heat generated by the module, consider it to be 2W max during transmission at Class12 GPRS upload for LE920A4-EU and LE920A4-CN variants / Class10 GPRS transmission for LE920A4-NA. The generated heat is mostly conducted to the ground plane under the module. Ensure that your application can dissipate heat.

In LTE/WCDMA/HSPA mode, the module emits RF signals continuously during transmission. Therefore, you must pay special attention how to dissipate the heat generated.

While designing the application board, the designer must make sure that the module is mounted on a large ground area of the application board, with many ground vias available beneath the module for effective heat dissipation.

Even though peak current consumption in GSM mode is higher than in LTE/WCDMA/HSPA, considerations for heat sink are more important in the case of WCDMA due to the continuous transmission conditions.

6.2.3. Power Supply PCB Layout Guidelines

As seen in the electrical design guidelines, the power supply must have a low ESR capacitor on the output to cut the current peaks and a protection diode on the input to protect the supply from spikes and polarity inversion. The placement of these components is crucial for the correct operation of the circuitry. A misplaced component can be useless or can even decrease the power supply performances.

- The bypass low ESR capacitor must be placed close to the module power input pads, or if the power supply is a switching type, it can be placed close to the inductor to cut the ripple, as long as the PCB trace from the capacitor to module is wide enough to ensure a drop-less connection even during the 2A current peaks.
- The protection diode must be placed close to the input connector where the power source is drained.
- The PCB traces from the input connector to the power regulator IC must be wide enough to ensure no voltage drops occur during the 2A current peaks.

  Note that this is not done to save power loss but especially to avoid the voltage drops on the power line at the current peaks frequency of 216 Hz that will reflect on all the components connected to that supply (also introducing the noise floor at the burst base frequency.)

For this reason, while a voltage drop of 300-400 mV may be acceptable from the power loss point of view, the same voltage drop may not be acceptable from the noise point of view. If your application does not have audio interface but only uses the data feature of the module, this noise is not so disturbing, and the power supply layout design can be more forgiving.

- The PCB traces to the module and to the bypass capacitor must be wide enough to ensure that no significant voltage drops occur when the 2A current peaks are absorbed. This is needed for the same above-mentioned reasons. Try to keep these traces as short as possible.
- The PCB traces connecting the switching output to the inductor and the switching diode must be kept as short as possible by placing the inductor and the diode very close to the power switching IC (only for switching power supply). This is done to reduce the radiated field (noise) at the switching frequency (usually 100-500 kHz).
- Use a good common ground plane.
- Place the power supply on the board in a way to guarantee that the high current return paths in the ground plane do not overlap any noise-sensitive circuitry, such as the microphone amplifier/buffer or earphone amplifier.
- The power supply input cables must be kept separate from noise-sensitive lines, such as microphone/earphone cables.

7. Antenna(s)

Antenna connection and board layout design are the most important parts in the full product design, and they have a strong influence on the product's overall performance. Read carefully and follow the requirements and the guidelines for a good and proper design.

7.1. GSM/WCDMA/TD-SCDMA/LTE Antenna Requirements

The antenna connected to the module must fulfill the following requirements:

Table 20: Antenna Requirements

Frequency range	The customer must use the most suitable antenna bandwidth for covering the frequency bands provided by the network operator and also supported by the car OEM while using the Titan module. The bands supported by each variant of the module family are given in Section 0.
Gain	Gain < 3 dBi
Impedance	50 Ohm
Input power	> 33 dBm(2 W) peak power in GSM > 24 dBm average power in WCDMA & LTE
VSWR absolute max	<= 10:1
VSWR recommended	<= 2:1

Since there is no antenna connector on the module, the antenna must be connected to the module's antenna pad (AD1) by a transmission line implemented on the PCB.

If the antenna is not directly connected to the antenna pad of the module, a PCB line is required to connect to it or to its connector.

This transmission line must meet the following requirements:

Table 21: Antenna Line on PCB Requirements

Characteristic impedance	50 Ohm
Max attenuation	0.3 dB
Avoid coupling with other signals.	
Cold End (Ground Plane) of the antenna must be equipotential to the module's ground pads.	

Furthermore, if the device is developed for the US and/or Canada market, it must comply with the FCC and/or IC approval requirements:

NOTE:

This device is to be used only for mobile and fixed application. The antenna(s) used for this transmitter must be installed to provide a separation distance of at least 20 cm from all persons and must not be co-located or operating in conjunction with any other antenna or transmitter. End-Users must be provided with transmitter operation conditions for satisfying RF exposure compliance. OEM integrators must ensure that the end user has no manual instructions to remove or install the module. Antennas used for this module must not exceed 3dBi gain for mobile and fixed operating configurations.

7.2. GSM/WCDMA/TD-SCDMA/LTE Antenna – PCB Line Guidelines

- Make sure that the transmission line's characteristic impedance is 50 Ohm.
- Keep the line on the PCB as short as possible since the antenna line loss should be less than around 0.3 dB.
- Line geometry should have uniform characteristics, constant cross section, and avoid meanders and abrupt curves.
- Any suitable geometry/structure can be used for implementing the printed transmission line affecting the antenna.
- If a ground plane is required in the line geometry, this plane must be continuous and sufficiently extended so the geometry can be as similar as possible to the related canonical model.
- Keep, if possible, at least one layer of the PCB used only for the ground plane; if possible, use this layer as reference ground plane for the transmission line.
- Surround the PCB transmission line with ground (on both sides). Avoid having other signal tracks facing the antenna line track directly.
- Avoid crossing any un-shielded transmission line footprint with other tracks on different layers.
- The ground surrounding the antenna line on the PCB must be strictly connected to the main ground plane by means of via-holes (once per 2mm at least) placed close to the ground edges facing the line track.
- Place EM-noisy devices as far as possible from the module antenna line.
- Keep the antenna line far away from the module power supply lines.
- If EM-noisy devices are present on the PCB hosting the module, such as fast switching ICs, take care to shield them with a metal frame cover.
- If EM-noisy devices are not present around the line, geometries like Micro strip or Grounded Coplanar Waveguide are preferred because they typically ensure less attenuation compared to a Strip line having the same length.

7.3. GSM/WCDMA/TD-SCDMA/LTE Antenna – Installation Guidelines

- Install the antenna in a location with access to the network radio signal.
- The antenna must be installed such that it provides a separation distance of at least 20 cm from all persons and must not be co-located or operating in conjunction with any other antenna or transmitter.
- The antenna must not be installed inside metal cases.
- The antenna must be installed according to the antenna manufacturer's instructions.

7.4. Antenna Diversity Requirements

This product includes an input for a second Rx antenna to improve the radio sensitivity. The function is called Antenna Diversity.

Table 22: Antenna Diversity Requirements

Frequency range	The customer must use the most suitable antenna band width for covering the frequency bands provided by the network operator and also supported by the car OEM while using the Titan module. The bands supported by each variant of the module family are provided in Section 2.6.1, RF Bands per Regional Variant.
Impedance	50Ω
VSWR recommended	≤ 2:1

Since there is no antenna connector on the module, the antenna must be connected to the module's antenna pad by a transmission line implemented on the PCB.

If the antenna is not directly connected at the antenna pad of the module, a PCB line is required to connect to it or to its connector.

The second Rx antenna must not be located in close vicinity of the main antenna. To improve the diversity gain and isolation and to reduce mutual interaction, the two antennas should be located at the maximum reciprocal distance possible, taking into consideration the available space within the application.

NOTE:
If Rx Diversity is not used/connected, disable the Diversity functionality using the AT#RXDIV or AT#LRXDIV command (refer to Ref 1: LE920A4 AT Command User Guide) and leave the Diversity pad AU9 unconnected.

7.5. GPS/GNSS Antenna Requirements

The module supports an active antenna.

It is recommended to use antennas as follows:

- An external active antenna (17dB typ. Gain, GPS only)
- An external active antenna plus GNSS pre-filter (17dB typ. Gain)

NOTE:
The external GNSS pre-Filter is required for the GLONASS application.
The GNSS pre-filter must meet the following requirements:

- Source and load impedance = 50 Ohm
- Insertion loss (1575.42 – 1576.42 MHz) = 1.4 dB (Max)
- Insertion loss (1565.42 – 1585.42 MHz) = 2.0 dB (Max)
- Insertion loss (1597.5515 – 1605.886 MHZ) = 2.0 dB (Max)

NOTE:
It is recommended to add a DC block to the customer's GPS application to prevent damage to the module due to undesired DC voltage.

NOTE:
It is recommended to add PI matching network near the GPS connector on the application board in case that RF matching is needed.

7.5.1. Combined GPS/GNSS Antenna

The use of combined RF/GPS/GNSS antenna is NOT recommended. This solution can generate an extremely poor GPS/GNSS reception. In addition, the combination of antennas requires an additional diplexer, which adds significant power loss in the RF path.

7.5.2. Linear and Patch GPS/GNSS Antenna

Using this type of antenna introduces at least 3 dB of loss compared to a circularly polarized (CP) antenna. Having a spherical gain response instead of a hemispherical gain response can aggravate the multipath behaviour and create poor position accuracy.

7.5.3. Front End Design Considerations

Since there is no antenna connector on the module, the antenna must be connected to the module through the PCB to the antenna pad.

If the antenna is not directly connected at the antenna pad of the module, a PCB line is required. This line of transmission must meet the following requirements:

Table 23: Antenna Line on PCB Requirements

Characteristic impedance	50 Ohm
Max attenuation	0.3 dB
Avoid coupling with other signals.	
Cold End (Ground Plane) of the antenna must be equipotential to the module's ground pads.	

Furthermore, if the device is developed for the US and/or Canada market, it must comply with the FCC and/or IC requirements.

This device is to be used only for mobile and fixed application.

7.5.4. GPS/GNSS Antenna – PCB Line Guidelines

- Ensure that the antenna line impedance is 50 Ohm.
- Keep the line on the PCB as short as possible to reduce the loss.
- The antenna line must have uniform characteristics, constant cross section, and avoid meanders and abrupt curves.
- Keep one layer of the PCB used only for the ground plane; if possible.
- Surround (on the sides, over and under) the antenna line on the PCB with ground. Avoid having other signal tracks directly facing the antenna line track.
- The ground around the antenna line on the PCB must be strictly connected to the main ground plane by placing vias at least once per 2mm.
- Place EM-noisy devices as far as possible from the module antenna line.
- Keep the antenna line far away from the module power supply lines.
- If EM-noisy devices are around the PCB hosting the module, such as fast switching ICs, ensure shielding the antenna line by burying it inside the layers of PCB and surrounding it with ground planes; or shield it with a metal frame cover.
- If you do not have EM-noisy devices around the PCB of the module, use a Micro strip line on the surface copper layer for the antenna line. The line attenuation will be lower than a buried one.

7.5.5. GPS/GNSS Antenna – Installation Guidelines

- The module, due to its sensitivity characteristics, is capable of performing a GNSS localization fix inside buildings. (Still, the sensitivity could be affected by the building characteristics, i.e. shielding.)
- The antenna must not be co-located or operating in conjunction with any other antenna or transmitter.
- The antenna must not be installed inside metal cases.
- The antenna must be installed according to the antenna manufacturer's instructions.

8. Hardware Interfaces

Table 24 summarizes all the hardware interfaces of the module.

Table 24: Hardware Interfaces

SGMII	For Ethernet PHY support
Ethernet Control	For controlling an external Ethernet PHY
HSIC	x1
SDIO	x2 (for SD/MMC card and for WLAN)
USB	USB2.0, OTG support
SPI	Master only, up to 50 MHz
I2C	For sensors, audio control
UART	2 HS-UART (up to 4 Mbps)
Audio I/F	I2S/PCM, Analog I/O
GPIO	x8
USIM	x2, dual voltage each (1.8V/2.85V)
ADC	Up to 3
Antenna ports	2 for Cellular, 1 for GNSS

8.1. USB Port

The module includes a Universal Serial Bus (USB) transceiver, which operates at USB high-speed (480 Mbits/sec). It can also operate with USB full-speed hosts (12 Mbits/sec).

It is compliant with the USB 2.0 specification and can be used for control and data transfers as well as for diagnostic monitoring and firmware update.

The USB port is typically the main interface between the module and OEM hardware.

NOTE:
The USB_D+ and USB_D- signals have a clock rate of 480 MHz. The signal traces must be routed carefully. Minimize trace lengths, number of vias, and capacitive loading. The impedance value should be as close as possible to 90 Ohms differential.

Table 25 lists the USB interface signals.

Table 25: USB Interface Signals

Signal	Pad No.	Usage
USB_VBUS	A18	Power and cable detection for the internal USB transceiver. Acceptable input voltage range 2.2V – 5.25V @ max 5 mA consumption
USB_D-	F19	Minus (-) line of the differential, bi-directional USB signal to/from the peripheral device
USB D+	D19	Plus (+) line of the differential, bi-directional USB signal to/from the peripheral device
USB_ID	B19	USB ID signal supporting USB2.0 OTG (see note below)

NOTE:
USB_VBUS input power is internally used to detect the USB port and start the enumeration process. A power supply pin with a maximum of 5 mA is required.
Do not use pull up or a voltage divider for sourcing this supply

NOTE:
Even if USB communication is not used, it is still highly recommended to place an optional USB connector on the application board.
At least test points of the USB signals are required since the USB physical communication is needed in the case of SW update.

8.1.1. USB OTG support

In order to support USB OTG, an additional 5V power supply as well as some additional connectivity should be added externally.

The below drawing provides a high level application circuit for enabling OTG connectivity

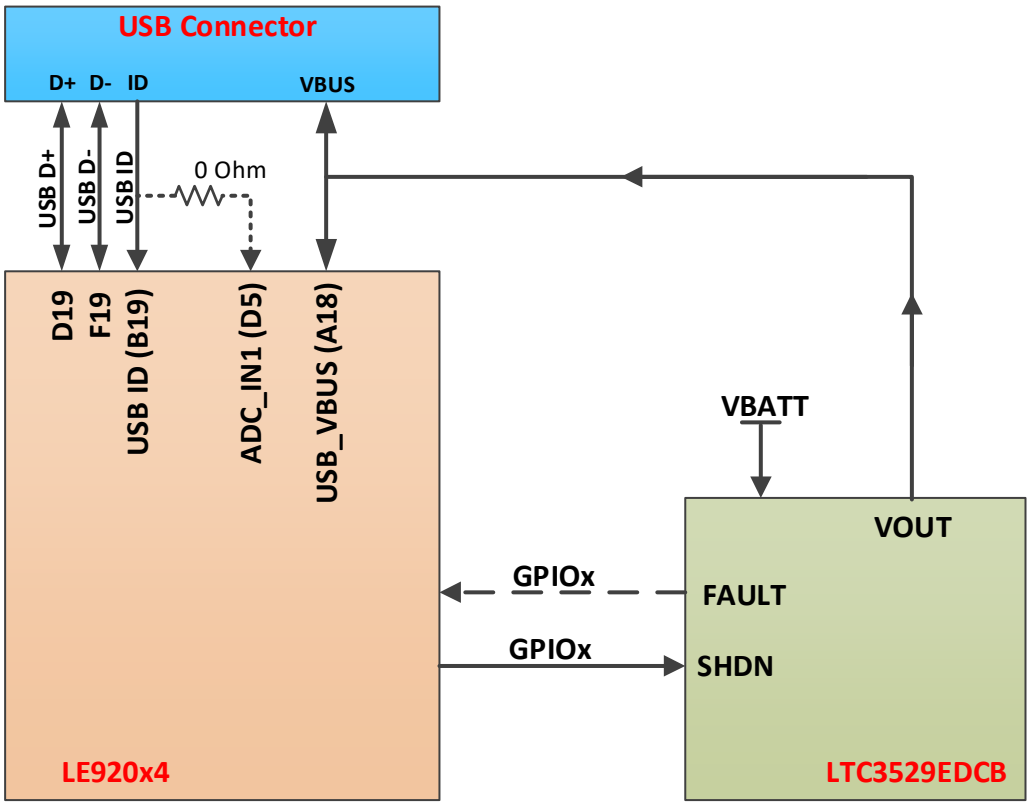

Figure 14 OTG Connectivity

Any available USB OTG 5V Boost such as LTC3529EDCB can be used

8.2. HSIC Interface (Optional)

The application processor exposes a High-Speed Inter-Chip (HSIC). HSIC eliminates the analog transceiver from a USB interface for lower voltage operation and reduced power dissipation. The HSIC interface is compliant with Ref 8: High-Speed Inter-Chip USB Electrical Specification, version 1.0 (a supplement to the USB 2.0 specification, Section 3.8.2), and supports the following:

- High-speed 480 Mbps (240 MHz DDR) USB transfers are 100% host driver compatible with traditional USB cable connected topologies
- Bidirectional data strobe signal (STROBE)
- Bidirectional data signal (DATA)
- No power consumption unless a transfer is in progress

Further details will be provided in a future release of this document.

8.3. Ethernet Connectivity (optional)

Ethernet connectivity can be optionally added to LE920A4 by adding an external PHY.

PHY connectivity uses SGMII interface for Data and a few additional signals for PHY control.

Further details can be found at

8.3.1. SGMII Interface

The LE920A4 module includes an integrated Ethernet MAC with an SGMII interface, having the following key features:

- The SGMII interface can be used to connect to an external Ethernet PHY or an external switch.
- When enabled, an additional network interface is available to the Linux kernel's router.

8.3.2. Ethernet Control Interface

When using an external PHY for Ethernet connectivity, the LE920A4 also includes the control interface to manage this external PHY.

Table 26 lists the signals for controlling the external PHY.

Table 26: Ethernet Control Interface Signals

PAD	Signal	I/O	Function	Type	COMMENT
G14	MAC_MDC	O	MAC to PHY Clock	2.85V	Logic Level Specifications is shown in Table 17
G12	MAC_MDIO	I/O	MAC to PHY Data	2.85V	
G8	ETH_RST_N	O	Reset to Ethernet PHY	2.85V	
G10	ETH_INT_N	I	Interrupt from Ethernet PHY	1.8V	Logic Level Specifications is shown in Table 12Table 12

NOTE:
The Ethernet control interface is internally (inside SoC) shared with the USIM2 port! When Ethernet PHY is used, the USIM2 port cannot be used (and vice versa).

NOTE:
ETH_INT_N is a 1.8V input. It has an internal pull up to 1.8V inside the module thus it should be connected to an open drain interrupt pin of the Ethernet PHY. In case the PHY does not support 1.8V I/O, proper level shifter needs to be used.

8.4. Serial Ports

The serial port is typically a secondary interface between the module and OEM hardware. Two serial ports are available on the module:

- MODEM SERIAL PORT 1(Main)
- MODEM SERIAL PORT 2 (Auxiliary)

Several configurations can be designed for the serial port on the OEM hardware. The most common are:

- RS232 PC com port
- Microcontroller UART @ 1.8V (Universal Asynchronous Receive Transmit)
- Microcontroller UART @ 3.3V/5V or other voltages different from 1.8V

Depending on the type of serial port on the OEM hardware, a level translator circuit may be needed to make the system operate. The only configuration that does not need level translation is the 1.8V UART.

The levels for the module's UART are the CMOS levels as described in Section 4.3

8.4.1. Modem Serial Port 1

Serial Port 1 is a +1.8V UART with all 8 RS232 signals.

It differs from the PC-RS232 in the signal polarity (RS232 is reversed) and levels.

Table 27 Serial Port 1 Signals

RS232 Pin Number	Signal	Pad Number	Name	Usage
1	DCD - DCD_UART	AE18	Data Carrier Detect	Output from the module that indicates carrier presence
2	RXD - TX_UART	AF19	Transmit line *see Note	Output transmit line of the module UART
3	TXD - RX_UART	AH19	Receive line *see Note	Input receive line of the module UART
4	DTR - DTR_UART	AC18	Data Terminal Ready	Input to the module that controls the DTE READY condition
5	GND	A6, A12, B13, 15...	Ground	Ground
6	DSR - DSR_UART	AG18	Data Set Ready	Output from the module that indicates the module is ready
7	RTS - RTS_UART	AA18	Request to Send	Input to the module that controls the Hardware flow control
8	CTS - CTS_UART	AK19	Clear to Send	Output from the module that controls the Hardware flow control
9	RI - RI_UART	AJ18	Ring Indicator	Output from the module that indicates the Incoming Call condition

NOTE:
DCD, DTR, DSR, RI signals that are not used for UART functions can be configured as GPIO using AT commands.

NOTE:
To avoid a back-powering effect, it is recommended to avoid any HIGH logic level signal applied to the digital pins of the module when it is powered OFF or during an ON/OFF transition.

NOTE:
For minimum implementations, only the TXD and RXD lines must be connected. The other lines can be left open provided a software flow control is implemented.

NOTE:
According to V.24, Rx/Tx signal names refer to the application side; therefore, on the module side, these signals are in the opposite direction: TXD on the application side will be connected to the receive line (here named TXD / RX_UART) of the module serial port and vice versa for Rx.

NOTE:
Asserting the DTR pin low will prevent the UART and the entire module from entering low power mode.

NOTE:
DTR pin can be left floating if not in use.

8.4.2. Modem Serial Port 2

Serial Port 2 is a +1.8V UART with Rx and Tx signals only.

Table 28 lists the signals of Serial Port 2.

Table 28: Modem Serial Port 2 Signals

PAD	Signal	I/O	Function	Type	Comment
AB19	TXD_AUX	O	Auxiliary UART (Tx Data to DTE)	1.8V	
AD19	RXD_AUX	I	Auxiliary UART (Rx Data to DTE)	1.8V	

NOTE:
To avoid a back-powering effect, it is recommended to avoid having any HIGH logic level signal applied to the digital pins of the module when it is powered OFF or during an ON/OFF transition.

NOTE:
The Auxiliary UART is used as the SW main debug console. It is required to place test points on this interface even if not used.

8.4.3. RS232 Level Translation

To interface the module with a PC COM port or an RS232 (EIA/TIA-232) application, a level translator is required. This level translator must perform the following actions:

- Invert the electrical signal in both directions
- Change the level from 0/1.8V to +15/-15V

The RS232 UART 16450, 16550, 16650 & 16750 chipsets accept signals with lower levels on the RS232 side (EIA/TIA-562), allowing a lower voltage-multiplying ratio on the level translator. Note that the negative signal voltage must be less than 0V and hence some sort of level translation is always required.

The simplest way to translate the levels and invert the signal is by using a single chip-level translator. There are a multitude of them, differing in the number of drivers and receivers and in the levels (be sure to get a true RS232 level translator, not a RS485 or other standards).

By convention, the driver is the level translator from the 0-1.8V UART to the RS232 level. The receiver is the translator from the RS232 level to 0-1.8V UART.

To translate the whole set of control lines of the UART, the following is required:

- 2 drivers
- 2 receivers

NOTE:
The digital input lines operating at 1.8V CMOS have an absolute maximum input voltage of 2.7V. The level translator IC outputs on the module side (i.e. module inputs) will cause damage to the module inputs if the level translator is powered by a +3.8V supply. So the level translator IC must be powered from a dedicated +1.8V power supply.

An example of RS232 level adaption circuitry could use a MAXIM transceiver (MAX218).

In this case, the chipset is capable of translating directly from 1.8V to the RS232 levels (Example on 4 signals only).

Figure 15: RS232 Level Adaption Circuitry Example

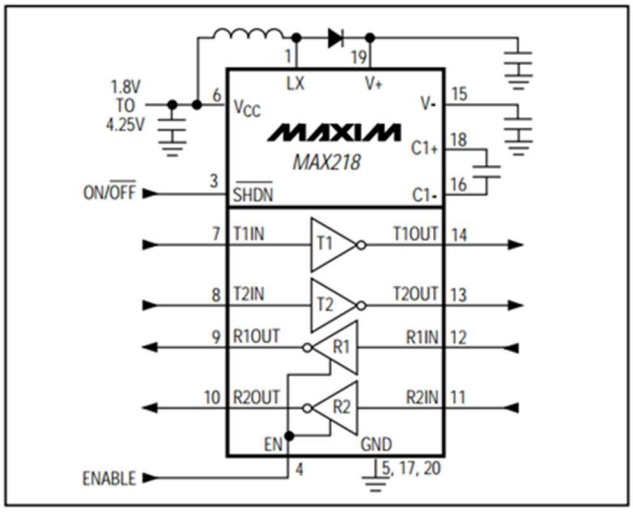

NOTE:
In this case, the length of the lines on the application must be taken into account to avoid problems in the case of High-speed rates on RS232.

The RS232 serial port lines are usually connected to a DB9 connector as shown in Figure 16. Signal names and directions are named and defined from the DTE point of view.

Figure 16: RS232 Serial Port Lines Connection Layout

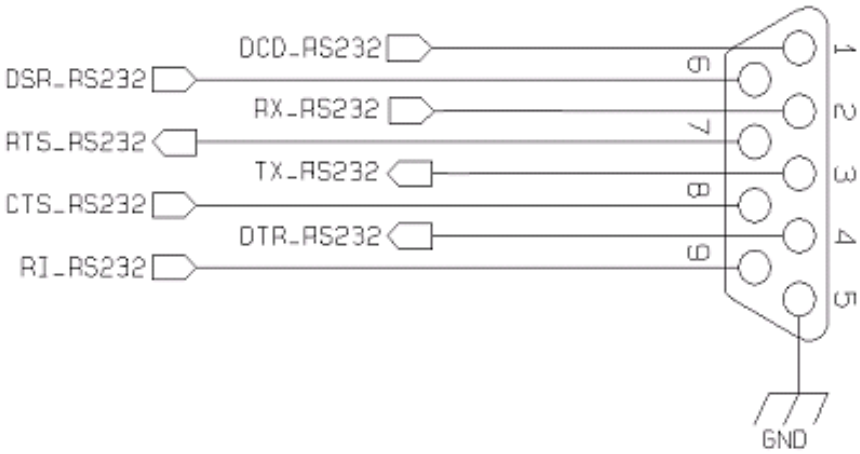

8.5. Peripheral Ports

In addition to the serial ports, the module supports the following peripheral ports:

- SPI – Serial Peripheral Interface
- I2C – Inter-Integrated Circuit
- SD/MMC Card Interface
- SDIO Interface

8.5.1. SPI – Serial Peripheral Interface

The module's SPI supports the following:

- Master mode only
- 1.8V CMOS level
- Up to 50 MHz clock rate

NOTE:
SPI is supported only on the Linux side.
The module supports Master mode only and cannot be configured as Slave mode.

Table 29: SPI Signals

PAD	Signal	I/O	Function	Type	Comment
P19	SPI_CLK	O	SPI clock output	1.8V	
M19	SPI_MISO	I	SPI data Master input Slave output	1.8V	
K19	SPI_MOSI	O	SPI data Master output Slave input	1.8V	
N18	SPI_CS	O	SPI chip-select output	1.8V	

Figure 17: SPI Signal Connectivity

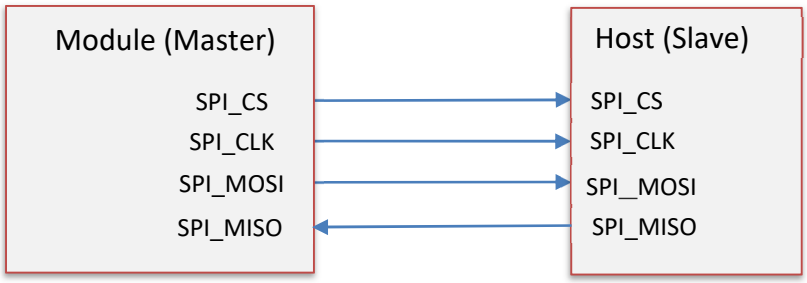

8.5.2. I2C - Inter-integrated Circuit

The module supports an I2C interface on the following pins:

Table 30: I2C Signals

PAD	Signal	I/O	Function	Type	Comments
C14	I2C_SCL	O	I2C Clock	1.8V	
D13	I2C_SDA	I/O	I2C Data	1.8V	

The I2C interface is used for controlling peripherals inside the module (such as codec, etc.).

The I2C can also be used externally by the end customer application. However, to avoid conflicts, the following addresses must not be used externally by the customer:

- Address 0x30 (8 bit, write), 0x31 (8 bit, read)
- Address 0x90 (8 bit, write), 0x91 (8 bit, read)

In addition, SW emulated I2C functionality can be used on GPIO 1-6 pins.

Any GPIO (among GPIO 1-6) can be configured as SCL or SDA.

The module supports I2C Master mode only.

NOTE:
SW-emulated I2C on GPIO lines is supported only from the modem side.
Refer to Ref 1: LE920A4 AT Command User Guide for command settings.

8.5.3. SD/MMC Card Interface

The module provides an SD port supporting the SD3.0 specification, which can be used to support standard SD/MMC memory cards with the following features:

- Interface with SD/MMC memory cards up to 2 Tera Byte
- Max clock @ 2.95V - 50 MHz SDR
  - Max Data: 25 MByte/s
  - SD standard: HS-SDR25 at 2.95V
- Max clock @ 1.8V - 200 MHz SDR
  - Max Data: 100 MByte/s
  - SD standard: UHS-SDR104 at 1.8 V
- Max clock @ 1.8V - 50 MHz DDR
  - Max Data: 50 MByte/s
  - SD standard: UHS-DDR50 at 1.8 V

Table 31 lists the module's SD card signals.

Table 31: SD Card Signals

PAD	Signal	I/O	Function	Type	Comments
AH17	SD/MMC_CMD	I/O	SD command	1.8/2.95V	
AD17	SD/MMC_CLK	O	SD card clock	1.8/2.95V	
Y17	SD/MMC_DATA0	I/O	SD Serial Data 0	1.8/2.95V	
AF17	SD/MMC_DATA1	I/O	SD Serial Data 1	1.8/2.95V	
AB17	SD/MMC_DATA2	I/O	SD Serial Data 2	1.8/2.95V	
W17	SD/MMC_DATA3	I/O	SD Serial Data 3	1.8/2.95V	
U17	SD/MMC_CD	I	SD card detect input	1.8V	Active Low
S17	VMMC	-	Power supply for MMC card pull-up resistors	1.8/2.95V	Max Current is 50 mA

Figure 18 shows the recommended connection diagram of the SD interface.

Figure 18: SD Interface Connectivity

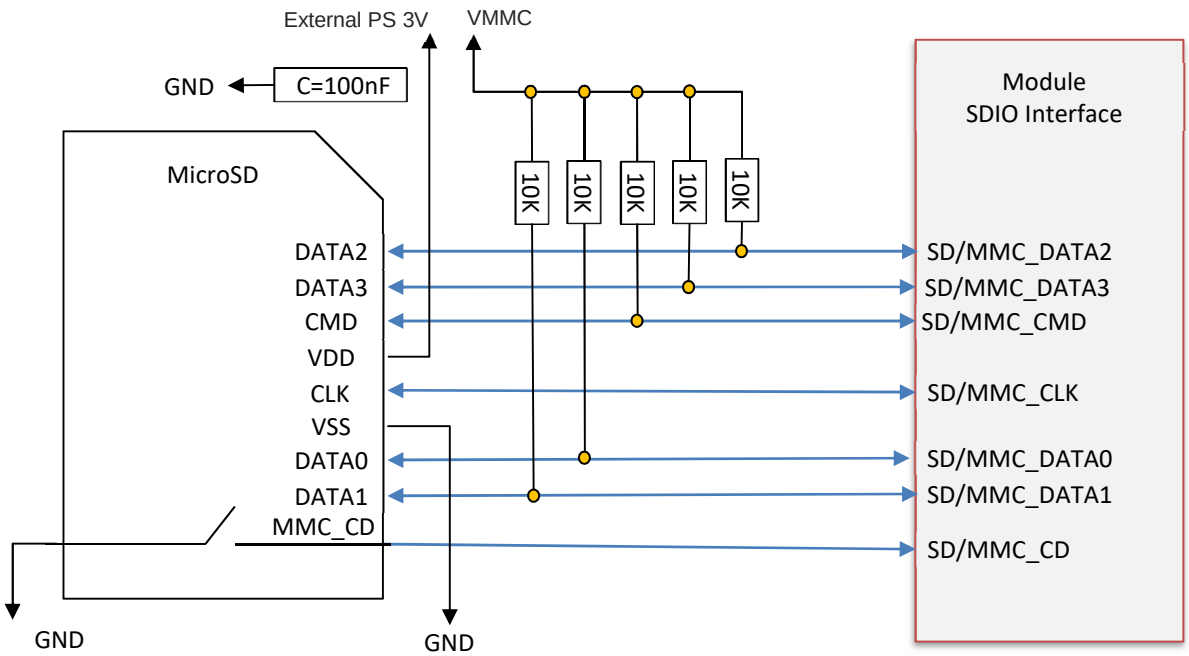

NOTE:
SD/MMC is supported only on the Linux side.
The VMMC supply is limited to 50 mA max and can be used only to supply the MMC card external pull-up resistors.
Pull-up resistors must be placed on the host application board.
The card detection input has an internal pull-up resistor.

NOTE:
The power supply to the SD/MMC card VCC is to be provided by the Host application board. The module does not provide a dedicated power supply for the SD/MMC card.
VMMC can be used to enable the external power supply (LDO Enable signal).

8.5.4. WiFi (SDIO) Control Interface

The module provides an SDIO port supporting the SDIO3.0 specification, which can be used to interface with a WiFi chipset (a Qualcomm QCA65x4 chipset or other WiFi solutions - TBD)

The module includes an integrated SW driver for supporting the Qualcomm QCA65x4 chipset.

The SDIO port supports the SDIO 3.0 specification at 1.8V CMOS only, thus cannot be used as an external SD/MMC card connection.

The module supports an LTE/WiFi coexistence mechanism via the WCI (Wireless Coexistence Interface) port, which connects between the module and the external WiFi IC.

For a detailed explanation, refer to

Ref 6: Titan_LE920A4_LE910Cx_Wi-Fi_Interface_Application_Note_r1

Table 32 lists the module's SD card signals.

Ref 7: Antenna Detection Application Note

Ref 10: LE920A4 Thermal Guidelines

Table 32: WiFi (SDIO) Control Interface

PAD	Signal	I/O	Function	Type	Comments
AB3	WiFi_SD_CMD	I/O	WiFi SD Command	1.8V	
AM3	WiFi_SD_CLK	O	WiFi SD Clock	1.8V	200 MHz max.
AD3	WiFi_SD_DATA0	I/O	WiFi SD Serial Data 0	1.8V	
AF3	WiFi_SD_DATA1	I/O	WiFi SD Serial Data 1	1.8V	
AH3	WiFi_SD_DATA2	I/O	WiFi SD Serial Data 2	1.8V	
AK3	WiFi_SD_DATA3	I/O	WiFi SD Serial Data 3	1.8V	
Y3	WiFi_SDRST	O	WiFi Reset / Output Control	1.8V	Active low
AS3	WCI_TX	O	Wireless coexistence interface TXD	1.8V	
AT2	WCI_RX	I	Wireless coexistence interface RXD	1.8V	

8.6. Audio Interface

The module provides analog and digital audio interfaces.

8.6.1. Analog Audio

The module provides a single analog audio path for transmitting and receiving on the following pins:

Table 33: Analog Audio Signals

PAD	Signal	I/O	Function	Type	Comment
B5	EAR1_MT+	AO	Earphone Signal Output 1, phase +	Analog	
A4	EAR1_MT-	AO	Earphone Signal Output 1, phase -	Analog	
B3	MIC1_MT+	AI	Mic Signal Input 1, phase +	Analog	
A2	MIC1_MT-	AI	Mic Signal Input 1, phase -	Analog	
G6	MICBIAS	AO	Mic bias	Analog	

PAD	Signal	I/O	Function	Type	Comment
E2	EAR2_MT+	AO	Earphone Signal Output 2, phase +	Analog	
D1	EAR2_MT-	AO	Earphone Signal Output 2, phase -	Analog	
C2	MIC2_MT+	AI	Mic Signal Input 2, phase +	Analog	
B1	MIC2_MT-	AI	Mic Signal Input 2, phase -	Analog	

For more details, refer to Ref 5: Digital Voice Interface_Application_Note.

WARNING:
The analog audio implementation uses an internal CODEC (inside the module). The internal codec uses the same signals as the external digital audio interface.
Therefore, applications that use analog audio (that is, the codec inside the module) must make sure that the digital audio interface is either not connected, set to Hi-Z, or set to 'input' to Host application.

8.6.2. Analog Audio Characteristics

The tables below list the analog audio characteristics of the audio codec included in the module.

8.6.2.1. Analog Inputs Characteristics

Table 34: Microphone Input Characteristics (Valid for both MIC1 and MIC2)

Parameter	Conditions	Min	Typ	Max
Input impedance		30 kΩ	50 kΩ	
Max microphone input	Mic Digital Gain = 0dB Mic Analog Gain = 1dBf = 1 kHz Differential mode			450mV P-P
THD + N	Mic Gain = 0dB f = 1 kHz Mic Input = 1VP-P, Differential mode		-80 dB	

Table 35: MIC Bias Specification (Pin G6)

Parameter	Conditions	Min	Typ	Max
Voltage	Load = 1 mA	1.5V	1.525V	1.55V
Max current				2 mA
PSRR	@217 Hz		85 dB	
	@10 kHz		81 dB	

8.6.2.2. Analog Output Characteristics

Table 36: EAR Output Characteristics (Valid for both EAR1 and EAR2)

Parameter	Conditions	Min	Typ	Max
Output impedance		16Ω	32Ω	
Max power output	THD < 1% f = 1 kHz Differential mode, R_L = 16Ω	30 mW	52 mW	
Max power output	THD < 1% f = 1 kHz Differential mode, R_L = 32Ω		32 mW	
Full-scale output	Differential mode		1 V_{RMS}	
	Single-ended mode		0.56 V_{RMS}	
THD+N	P_{OUT} = 25 mW R_L = 32Ω f = 1 kHz Differential mode		- 80 dB	
	P_{OUT} = 25 mW R_L = 32Ω f = 1 kHz Single-ended mode		-76 dB	

8.6.3. Digital Audio

The module can be connected to an external codec through the digital interface.

The product provides a single Digital Audio Interface (DVI) on the following pins:

Table 37: Digital Audio Interface (DVI) Signals

PAD	Signal	I/O	Function	Type	COMMENT
D11	DVI_WA0	O	Digital Audio Interface (WA0)	B-PD 1.8V	PCM_SYNC/I2S WS
C8	DVI_RX	I	Digital Audio Interface (RX)	B-PD 1.8V	PCM_DIN/I2S_DATA_IN
D9	DVI_TX	O	Digital Audio Interface (TX)	B-PD 1.8V	PCM_DOUT/I2S_DATA_OUT
C10	DVI_CLK	O	Digital Audio Interface (CLK)	B-PD 1.8V	PCM_CLK/I2S_CLK
C12	REF_CLK	O	Codec Reference Clock	B-PD 1.8V	I2S_MCLK

The DVI of the module has the following characteristics:

- PCM Master mode using short or long frame sync modes
- 16 bit linear PCM format
- PCM clock rates of 256 kHz, 512 kHz, 1024 kHz and 2048 kHz (Default)
- Frame size of 8, 16, 32, 64, 128 & 256 bits per frame
- Sample rates of 8 kHz and 16 kHz

In addition to the DVI port, the module provides a master clock signal (REF_CLK on Pin C12) which can either provide a reference clock to an external codec or form an I2S interface together with the DVI port where the REF_CLK acts as the I2S_MCLK.

The REF_CLK default frequency is 12.288 MHz.

When using the DVI with REF_CLK as an I2S interface, 12.288 MHz is 256 x fs (where fs = 48 kHz).

8.6.3.1. Short Frame Timing Diagrams

Figure 19: Primary PCM Timing

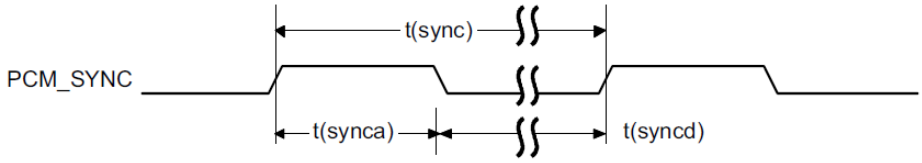

PCM_SYNC timing

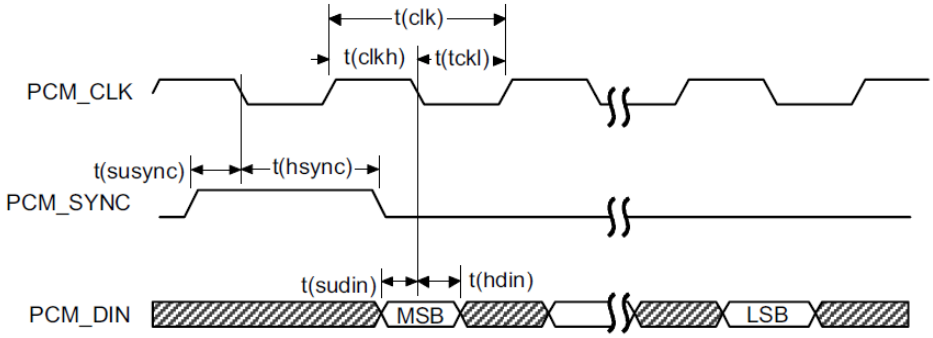

PCM_CODEC to Module timing

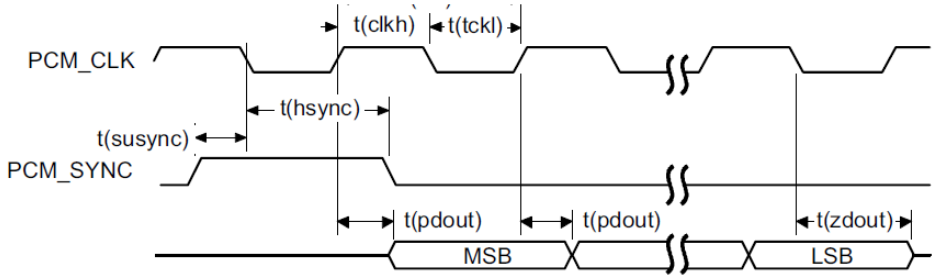

Module to PCM_CODEC

Table 38: PCM_CODEC Timing Parameters

Parameter		Comments	Min	Typ	Max	Unit
t(sync)	PCM_SYNC cycle time		–	125	–	µs
t(synca)	PCM_SYNC asserted time		–	488	–	ns
t(syncd)	PCM_SYNC deasserted time		–	124.5	–	µs
t(clk)	PCM_CLK cycle time		–	488	–	ns
t(clkh)	PCM_CLK high time		–	244	–	ns
t(clkl)	PCM_CLK low time		–	244	–	ns
t(susync)	PCM_SYNC offset time to PCM_CLK falling		–	122	–	ns
t(sudin)	PCM_DIN setup time to PCM_CLK falling		60	–	–	ns
t(hdin)	PCM_DIN hold time after PCM_CLK falling		10	–	–	ns
t(pdout)	Delay from PCM_CLK rising to PCM_DOUT valid		–	–	60	ns
t(zdout)	Delay from PCM_CLK falling to PCM_DOUT high impedance		–	160	–	ns

8.6.3.2. Long Frame Timing Diagrams

Figure 20: Auxiliary PCM Timing

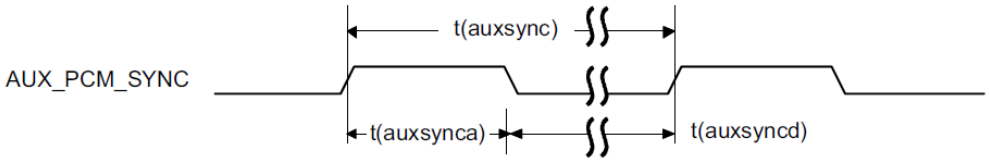

AUX_PCM_SYNC timing

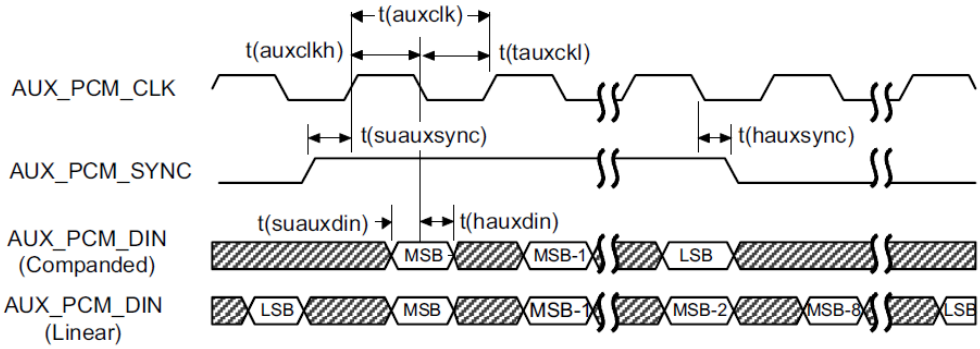

AUX_PCM_CODEC to Module timing

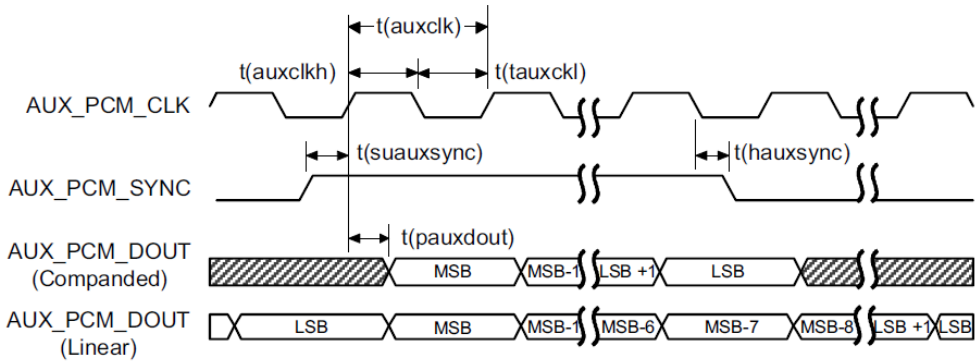

Module to AUX_PCM_CODEC timing

Table 39: AUX_PCM_CODEC Timing Parameters

Parameter		Comments	Min	Typ	Max	Unit
t(auxsync)	AUX_PCM_SYNC cycle time		–	125	–	µs
t(auxsynca)	AUX_PCM_SYNC asserted time		62.4	62.5	–	µs
t(auxsyncd)	AUX_PCM_SYNC de-asserted time		62.4	62.5	–	µs
t(auxclk)	AUX_PCM_CLK cycle time		–	7.8	–	µs
t(auxclkh)	AUX_PCM_CLK high time		3.8	3.9	–	µs
t(auxclkl)	AUX_PCM_CLK low time		3.8	3.9	–	µs
t(suauxsync)	AUX_PCM_SYNC setup time to AUX_PCM_CLK rising		1.95	–	–	ns
t(hauxsync)	PCM_SYNC hold time after AUX_PCM_CLK rising		1.95	–	–	ns
t(suauxdin)	AUX_PCM_DIN setup time to AUX_PCM_CLK falling		70	–	–	ns
t(hauxdin)	AUX_PCM_DIN hold time after AUX_PCM_CLK falling		20	–	–	ns
t(pauxdout)	Delay from AUX_PCM_CLK to AUX_PCM_DOUT valid		–	–	50	ns

8.7. General Purpose I/O

The general-purpose I/O pads can be configured to act in three different ways:

- Input
- Output
- Alternate function (internally controlled)

Input pads can only be read and report digital values (high or low) present on the pad at reading time. Output pads can only be written to or queried and set the value of the pad output. An alternate function pad is internally controlled by the module's firmware and acts depending on the implemented function.

The following GPIOs are available as a primary function in the module.

Table 40: Primary GPIOs

PAD	Signal	I/O	Function	Type	Drive Strength	Note
F9	GPIO_01	I/O	Configurable GPIO	CMOS 1.8V	2-16 mA	*
E10	GPIO_02	I/O	Configurable GPIO	CMOS 1.8V	2-16 mA	
F11	GPIO_03	I/O	Configurable GPIO	CMOS 1.8V	2-16 mA	
E12	GPIO_04	I/O	Configurable GPIO	CMOS 1.8V	2-16 mA	
F13	GPIO_05	I/O	Configurable GPIO	CMOS 1.8V	2-16 mA	*
E14	GPIO_06	I/O	Configurable GPIO	CMOS 1.8V	2-16 mA	*
W19	GPIO_10	I/O	Configurable GPIO	CMOS 1.8V	2-16 mA	
AN4	GPIO_20	I/O	Configurable GPIO	CMOS 1.8V	2-16 mA	

Warning:

GPIO's marked with (*) should not be pulled high externally (by the carrier board) during module power on procedure. Pulling those pads high during module power up might lead to unwanted/non-operational boot mode.

NOTE:
The GPIOs can also be used as alternate I2C function. Refer to Section 8.5.2, I2C - Inter-integrated Circuit.

NOTE:
To avoid a back-powering effect, it is recommended to avoid having any HIGH logic level signal applied to the digital pins of the module when it is powered OFF or during an ON/OFF transition.

8.7.1. Using a GPIO Pad as Input

GPIO pads, when used as inputs, can be connected to a digital output of another device and report its status, provided this device has interface levels compatible with the 1.8V CMOS levels of the GPIO.

If the digital output of the device is connected with the GPIO input, the pad has interface levels different from the 1.8V CMOS. It can be buffered with an open collector transistor with a 47 kΩ pull-up resistor to 1.8V.

8.7.2. Using a GPIO Pad as an Interrupt Source

GPIO pads, when used as inputs, can also be used as an interrupt source for the software.

In general, all GPIO pads can also be used as interrupt sources. However, not all GPIOs can be used as a wakeup source of the module (wakeup from sleep)

Only the following GPIOs can be used to wake up the system from sleep:

- GPIO1
- GPIO4
- GPIO5

8.7.3. Using a GPIO Pad as Output

GPIO pads, when used as outputs, can drive 1.8V CMOS digital devices or compatible hardware. When set as outputs, the pads have a push-pull output, and therefore the pull-up resistor can be omitted.

Figure 21: Output PAD Equivalent Circuit

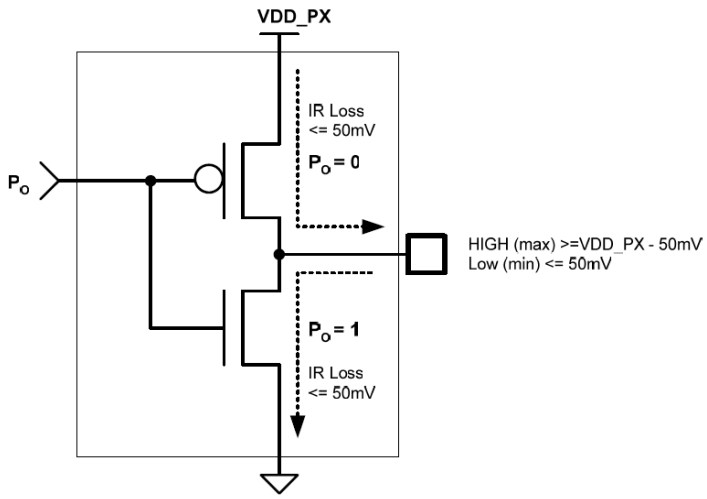

9. Miscellaneous Functions

9.1. Indication of Network Service Availability

The STAT_LED pin status shows information on the network service availability and call status. In the module, the STAT_LED usually needs an external transistor to drive an external LED. Table 41 shows the device status corresponding to the pin status:

Table 41: Network Service Availability Indication

LED Status	Device Status
Permanently off	Device off
Fast blinking (Period 1s, T_{on} 0,5s)	Net search / Not registered / Turning off
Slow blinking (Period 3s, T_{on} 0,3s)	Registered full service
Permanently on	A call is active

Figure 22: Status LED Reference Circuit

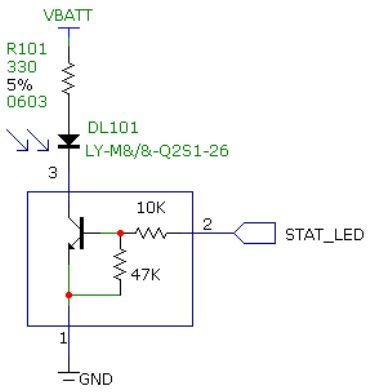

9.2. RTC – Real Time Clock

The RTC within the module does not have a dedicated RTC supply pin. The RTC block is supplied by the VBATT supply.

If the battery is removed, the RTC function is not maintained. Therefore, VBATT must be supplied continuously for maintaining the internal RTC function.

In Power OFF mode, the average current consumption is ~25 uA.

9.3. VAUX Power Output

A regulated power supply output is provided to supply power to small devices from the module. This output is active when the module is ON and goes OFF when the module is shut down. The operating range characteristics of the supply are as follows:

Table 42: Operating Range – VAUX Power Supply

	Min	Typical	Max
Output voltage	1.75V	1.80V	1.85V
Output current			100 mA
Output bypass capacitor (inside the module)			1 µF

9.4. ADC Converter

9.4.1. Description

The module provides three 8-bit Analog to Digital converters. Each ADC reads the voltage level applied on the relevant pin, converts it, and stores it into an 8-bit word.

Table 43 shows the ADC characteristics.

Table 43: ADC Parameters

	Min	Max	Units
Input voltage range	0.1	1.7	Volt
AD conversion	-	8	bits
Resolution	-	7	mV

9.4.2. Using ADC Converter

An AT command is available to use the ADC function.

The command is AT#ADC=1,2. The read value is expressed in mV.

Refer to Ref 1: LE920A4 AT Command User Guide for the full description of this function.

9.5. Using the Temperature Monitor Function

The Temperature Monitor permits to control the module's internal temperature and, if properly set (see the #TEMPMON command in Ref 1: LE920A4 AT Command User Guide), raises a GPIO to High Logic level when the maximum temperature is reached.

9.6. Fuel Gauge (optional)

The module can optionally support an external Fuel Gauge solution.

In this case, an external IC that is capable of measuring the current flow in and out of the module must be added on the carrier board.

Figure 23 shows an example of a typical connectivity of such an external fuel gauge to the module.

Detailed design - TBD

Figure 23: Fuel Gauge Connectivity Example

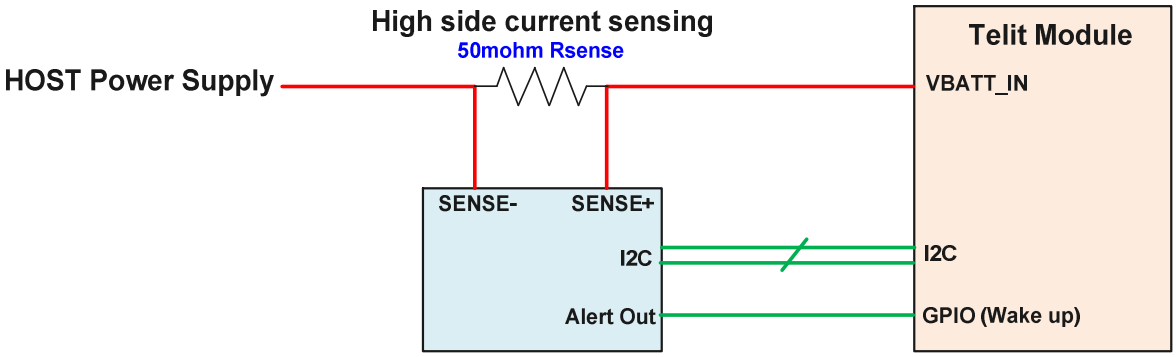

9.7. GNSS Characteristics

9.7.1. Reciever performance

Table 44 specifies the typical GNSS characteristics and expected performance. The values reflect typical environment and conditions.

Table 44: GNSS Characteristics

Parameters		Typical Measurement	Notes
Sensitivity	Standalone or MS-based tracking sensitivity	-162.3 dBm	
	Acquisition	-157.5 dBm	
	Cold start sensitivity	-157.5 dBm	
TTFF	Hot	1.1s	GPS+GLONASS Simulator test
	Warm	22.1s	GPS+GLONASS Simulator test
	Cold	29.94s	GPS+GLONASS Simulator test
Accuracy		0.8m	GPS+GLONASS Simulator test
Navigation update rate		1 Hz	
Dynamics		2g	
Operation limits		515 m/sec	
A-GPS		Supported	

9.7.2. GPS Sync Characteristics

The GPS_SYNC signal I/O specification followes the regual 1.8V GPIO as described in 4.3.2

The below figure described the timing of SPG_SYNC signal

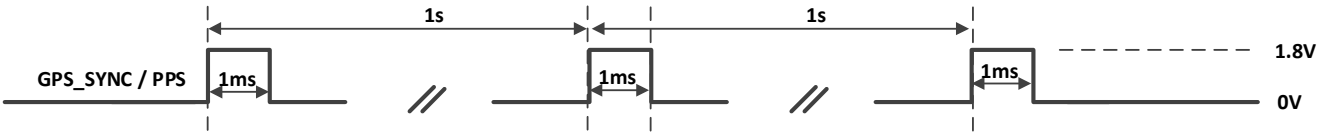

10. Mounting the Module on Your Board

10.1. General

The module is designed to be compliant with a standard Pb free soldering process.

10.2. Finishing & Dimensions

Figure 24 shows the mechanical dimensions of the module.

Figure 24: Mechanical Dimensions

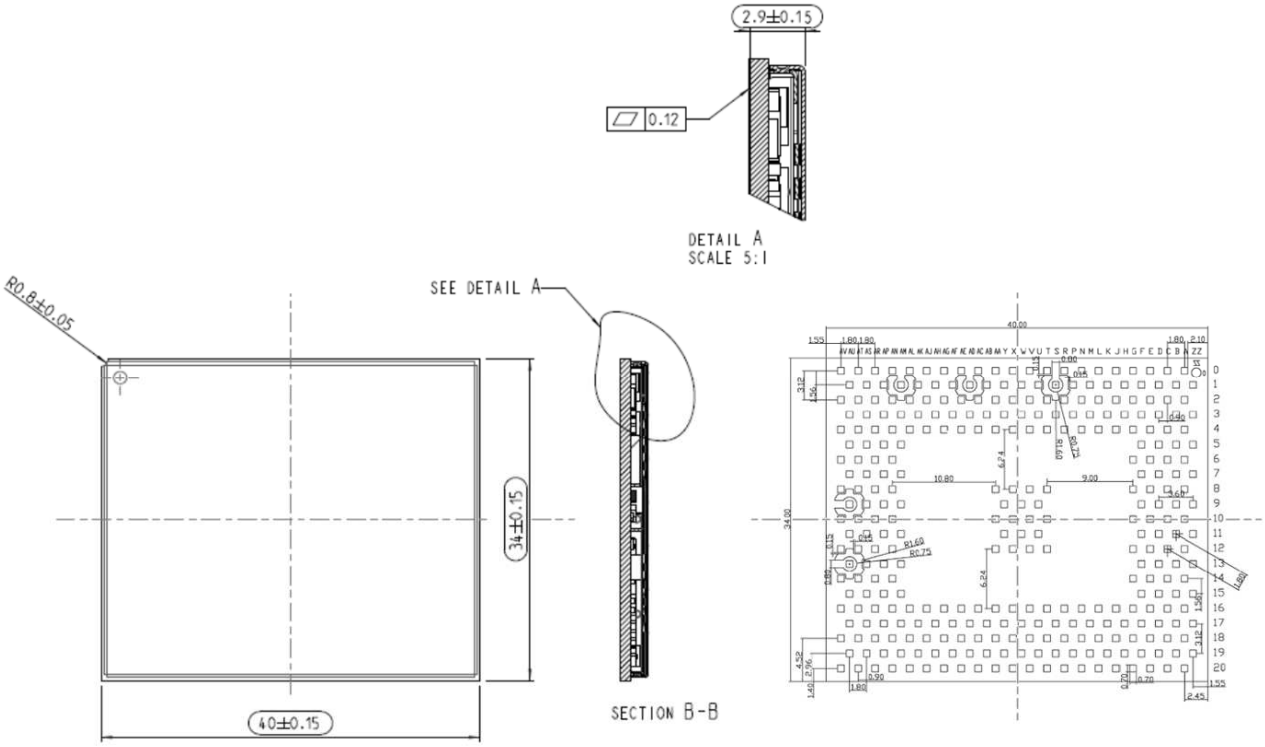

10.3. Recommended Foot Print for the Application

Figure 25 shows the recommended footprint for the application board (dimensions are in mm).

To facilitate replacing the module if necessary, it is suggested to design the application board with a 1.5 mm placement inhibit area around the module.

It is also suggested, as a common rule for an SMT component, to avoid having a mechanical part of the application board in direct contact with the module.

NOTE:
In the customer application, the 5 crowns marked as INHIBIT in Figure 25 must be clear of signal wiring or ground polygons.
The 5 crown pads should not exist on the customer application board.

Figure 25: Recommended Footprint (Top View)

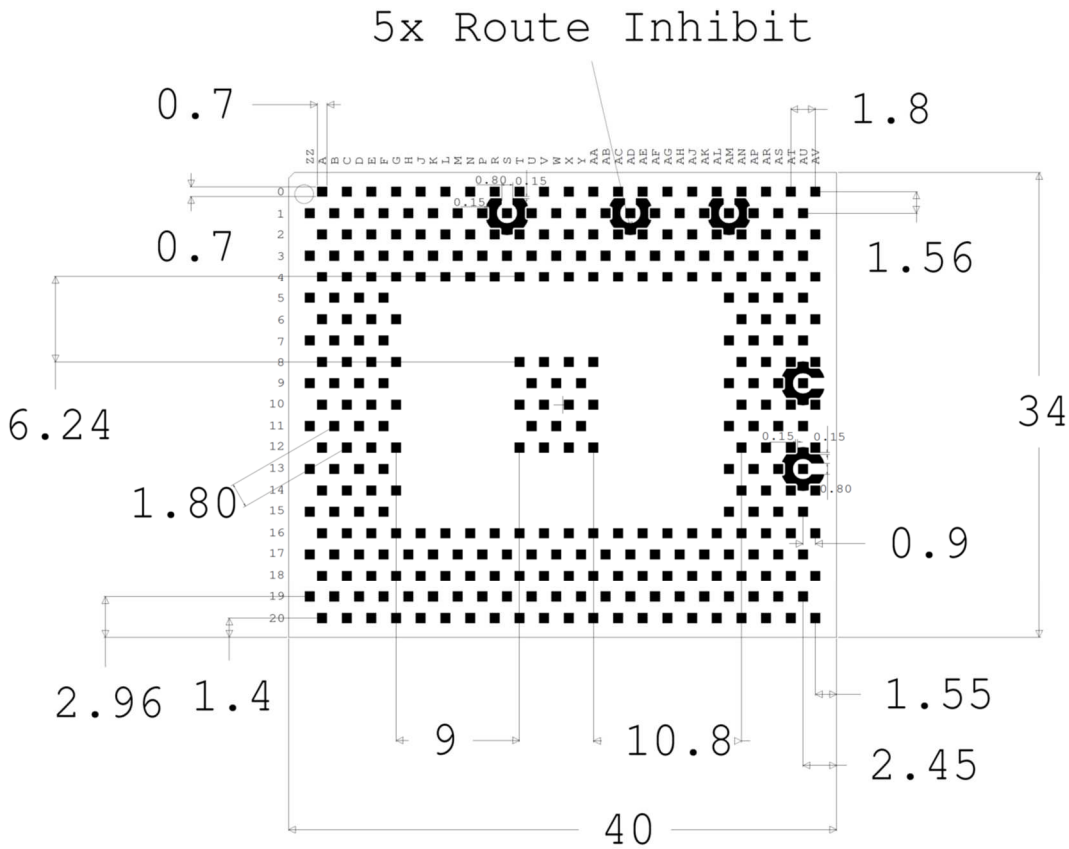

10.4. Stencil

Stencil's apertures layout can be the same as the recommended footprint (1:1). The suggested thickness of stencil foil is greater than 120 µm (~5mil).

10.5. PCB Pad Design

The solder pads on the PCB are recommended to be of the Non Solder Mask Defined (NSMD) type.

Figure 26: PCB Pad Design

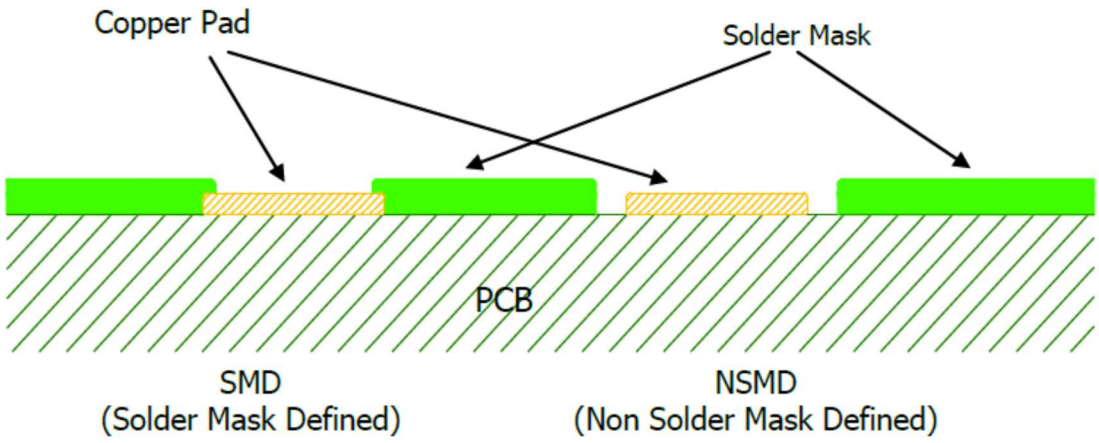

10.6. Recommendations for PCB Pad Dimensions (mm)

Figure 27: PCB Pad Dimensions

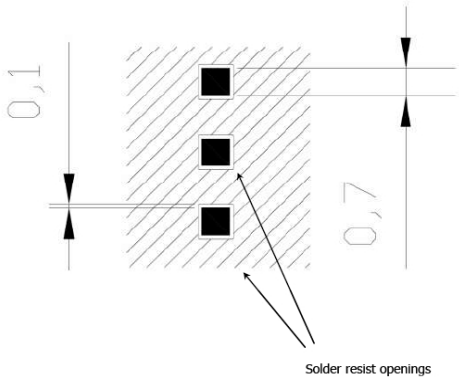

It is not recommended to place around the pads a via or micro-via that is not covered by solder resist in an area of 0.15 mm unless it carries the same signal as the pad itself. Micro via inside the pads are allowed.

Holes in pad are allowed only for blind holes and not for through holes.

Table 45: Recommendations for PCB Pad Surfaces

Finish	Layer Thickness (u-inch / um)	Properties
Electro-less Ni / Immersion Au (ENIG)	2 - 8 / 0.05 - 0.2	Good solder ability protection, high shear force values, long shelf life

The PCB must be able to resist the higher temperatures that occur during the lead-free process. This issue should be discussed with the PCB supplier. Generally, the wettability of tin-lead solder paste on the described surface plating is better compared to lead-free solder paste.

10.7. Solder Paste

It is recommended to use only “no clean” solder paste to avoid cleaning of the modules after assembly.

10.7.1. Solder Reflow

Figure 28 shows the recommended solder reflow profile.

Figure 28: Solder Reflow Profile

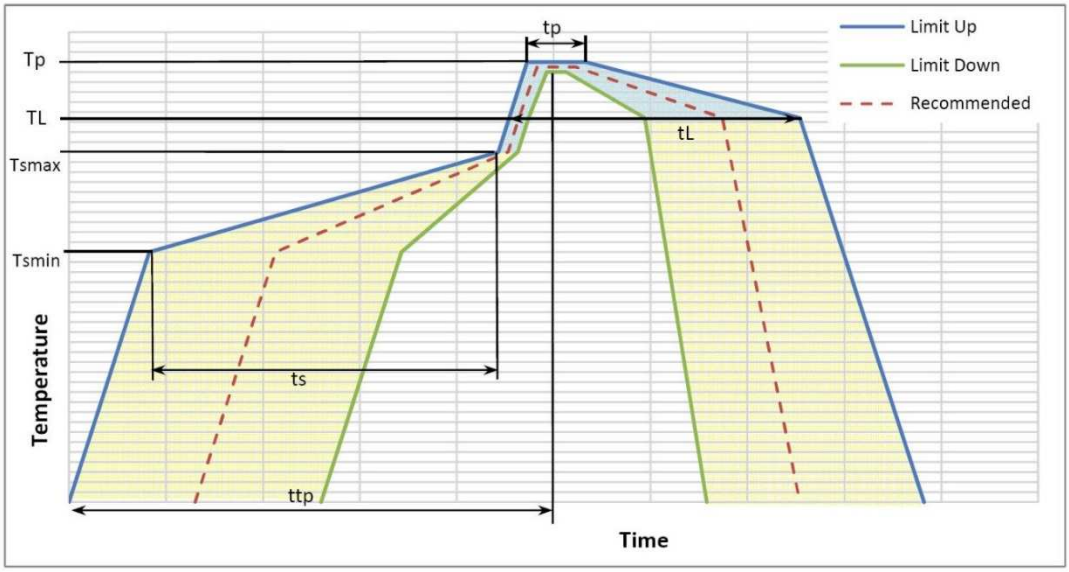

Table 46: Solder Profile Characteristics

Profile Feature	Pb-Free Assembly
Average ramp-up rate (T_L to T_P)	3°C/second max
Preheat – Temperature Min (Tsmin) – Temperature Max (Tsmax) – Time (min to max) (ts)	 150°C 200°C 60-180 seconds

Profile Feature	Pb-Free Assembly
Tsmax to TL – Ramp-up rate	 3°C/second max
Time maintained above: – Temperature (TL) – Time (tL)	 217°C 60-150 seconds
Peak temperature (Tp)	245 +0/-5°C
Time within 5°C of actual peak temperature (tp)	10-30 seconds
Ramp-down rate	6°C/second max.
Time 25°C to peak temperature	8 minutes max.

NOTE:
All temperatures refer to the top side of the package, measured on the package body surface.

WARNING:
The module withstands one reflow process only.

10.8. Cleaning

In general, cleaning the module mounted on the carrier board is not recommended.

- Residues between module and host board cannot be easily removed with any cleaning method.
- Cleaning with water or any organic solvent can lead to capillary effects where the cleaning solvent is absorbed into the gap between the module and the host board or even leak inside the module (due to the gap between the module shield and PCB) . The combination of soldering flux residues and encapsulated solvent could lead to short circuits between conductive parts. The solvent could also damage the module label.
- Ultrasonic cleaning could damage the module permanently. Especially for crystal oscillators where the risk of damaging is very high.

11. Application Guide

11.1. Debug of the Module in Production

To test and debug the mounting of the module, it is strongly recommended to add several test pads on the host PCB for the following purposes:

- Checking the connection between the module itself and the application board
- Testing the performance of the module by connecting it with an external computer

Depending on the customer application, these pads include, but are not limited to the following signals:

- TXD
- RXD
- ON/OFF
- SHDN_N
- RESET_N
- GND
- VBATT
- TX_AUX
- RX_AUX
- USB_VBUS
- USB_D+
- USB_D-
- GPIO20
- WCI_RX

In addition, the following signals are also recommended (but not mandatory):

- PWRMON
- STAT_LED
- SW_RDY

11.2. Bypass Capacitor on Power Supplies

When a sudden voltage step is asserted to the module, or a sudden cut of the power supply occurs, the steep transition causes an overshoot or undershoot. This abrupt voltage transition can affect the device, causing it not to operate or to malfunction. Bypass capacitors are needed to alleviate this behaviour. Customers must pay special attention to this issue while designing the application board.

The length and width of the power lines must be considered carefully, and values of the bypass capacitors must be selected accordingly.

The capacitors also prevent a ripple of the power supplies and the switching noise caused in TDMA systems, such as GSM.

In particular, suitable bypass capacitors must be placed on the following lines within the application board:

- VBATT & VBATT_PA
  (Pads AP17,AP19,AR18,AR20,AS17,AS19,AT18,AU17,AU19,AT20)
- USB_VBUS (Pad A18)

Recommended values are:

- 100 uF for both VBATT and VBATT_PA together
- 4.7uF for USB_VBUS (including the 1uF capacitor inside the module)

The capacitance mainly depends on the condition of the application board. In general, higher capacitance values are required for longer power lines.

11.3. SIM Interface

This section presents the recommended schematics for the design of SIM interfaces on the application boards. The module supports two external SIM interfaces.

11.3.1. SIM Schematic Example

Figure 29 illustrates in particular how to design the application side and which values to assign the components.

Figure 29: SIM Schematics

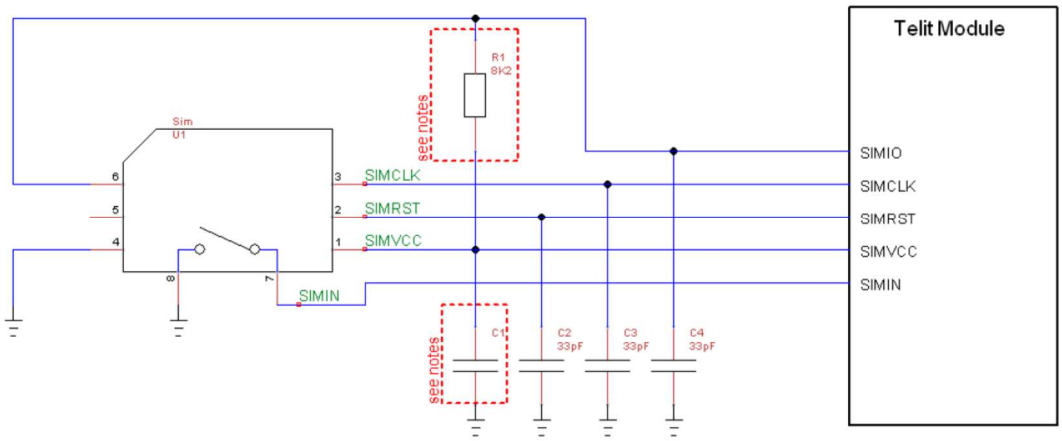

NOTE:
The resistor value on SIMIO pulled up to SIMVCC must be defined to be compliant with the 3GPP specification for USIM electrical testing.
The module contains an internal pull-up resistor of 10KΩ on SIMIO. However, the un-mounted option in the application design can be recommended to tune R1 if necessary.

The value of the C1 capacitor to be applied with the module is 100 nF.

11.4. EMC Recommendations

All signals in the module are provided with some EMC protection. Nevertheless, the accepted level differs according to specific pin. Table 47 lists the characteristics.

Table 47: EMC Recommendations

Pad	Signal	I/O	Function	Contact	Air
All pins					
	All pins		All pins	± 4KV	± 8KV
Antenna					
AD1,AU9,S1	Antenna pads	Analog I/O	Antenna pad	± 4KV	± 8KV

Appropriate series resistors must be considered to protect the input lines from overvoltage.

11.5. Download and Debug Port

This section provides recommendations for the design of the host system for downloading or upgrading the Titan software and for debugging the module when it is already mounted on a host system.

- For downloading or upgrading the Titan software:

  Updating the firmware by the host is only possible via USB and not via UART.

  If the USB interface is not used, it is highly recommended to place an optional USB connector on the application board. At the minimum, test points of the USB signals are required to enable SW update.

- For debugging the module:

  USB and Auxiliary UART interfaces are used for debugging the module. If the USB and AUX UART interfaces are not used, it is highly recommended to place optional connectors on the application board. At least, test points of the USB and AUX UART signals are required for debugging purposes.

11.5.1. Fast Boot Mode

Fast Boot mode is normally used by Titan software to enter SW Download mode.

Fast Boot mode is triggered by GPIO_20 (PAD AN4). Asserting this signal high (1.8V) during boot will force the system into Fast Boot mode.

11.5.2. Recovery Boot Mode

A Recovery Boot Download mode is used if a corrupted boot image was flashed into the device or if all other recovery modes failed.

Recovery Boot Download mode is triggered by the WCI_RX signal (PAD AT2). Asserting this signal high (1.8V) during boot will force the system into Recovery Boot Download mode.

NOTE:
The application board must support accessible test pads on the GPIO_20 and WCI_RX signals to enable the download recovery modes mentioned above.

11.6. Antenna Detection

The module provides an antenna detection application, indicating for each of the cellular and GNSS antennas whether it is shorted to ground or open.

Refer to Ref 8: High-Speed Inter-Chip USB Electrical Specification, version 1.0

.

NOTE:
The antenna detection circuit is not presented inside the module but has to be implemented externally following the guidance in the application note.

12. Packing System

12.1. Tray

The module can be packed on trays.

The tray is JEDEC compliant, injection molded antistatic Modified Polyphenylene ether (MPPO). It has good thermal characteristics and can withstand a standard baking temperature of up to 125°C, thereby avoiding handling the modules if baking is required. The trays are rigid, thus providing mechanical protection against transport stress. In addition, they are re-usable and so environmentally sustainable.

There are 2 (two) antistatic rubber bands that enclose each envelope.

The carton box is rigid, offering mechanical protection. The carton box has one flap across the entire top surface. It is sealed with tape along the edges of the box.

Table 48: Tray Packing

Modules per Tray	Trays per Envelope	Modules per Envelope	Envelopes per Carton Box	Modules per Box
24	5 + 1 empty	120	4	480

Table 49: Packing Quantities

Order Type	Quantity
Minimum Order Quantity (MOQ)	24
Standard Packing Quantity (SPQ)	480

Each tray contains 24 pieces as shown in Figure 30.

Figure 30: Tray Packing

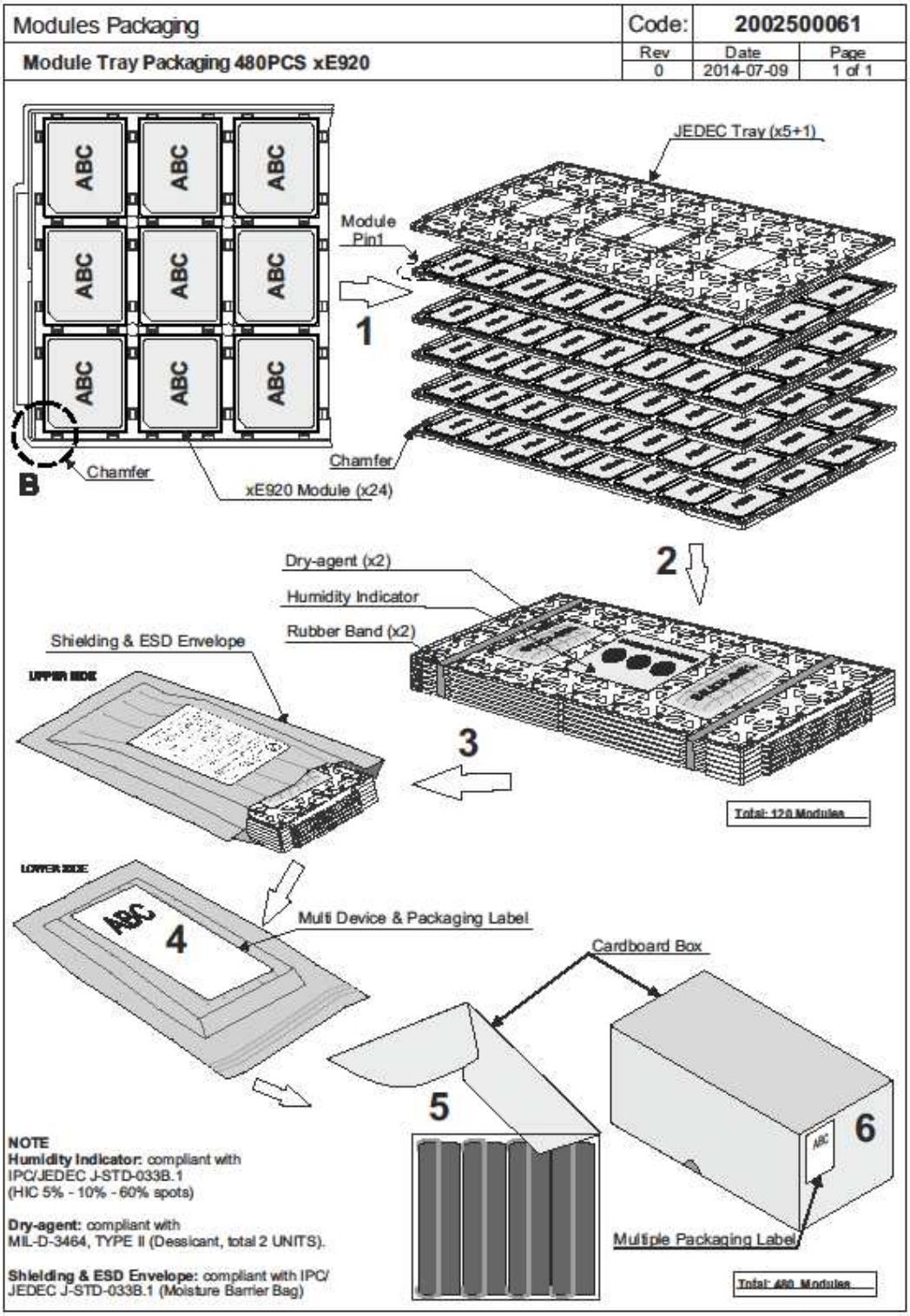

Figure 31: Packing Tray Drawing

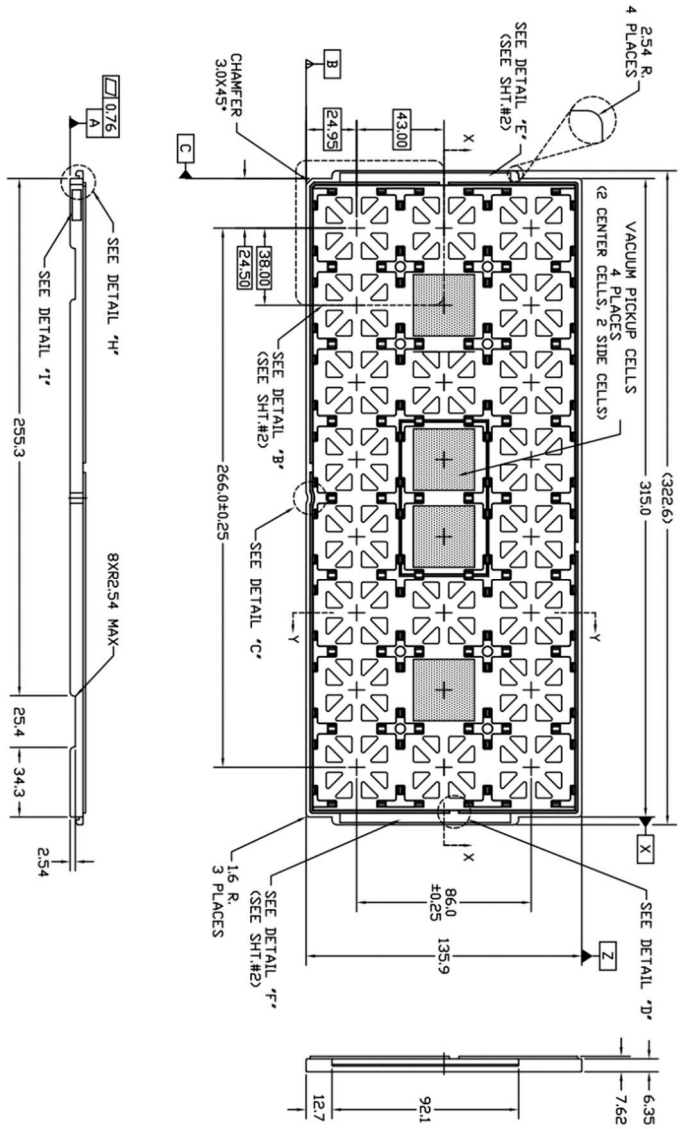

12.2. Tape & Reel

The module can be packed on tape & reels of 200 pieces each.

Figure 32: Module Positioning into the Carrier

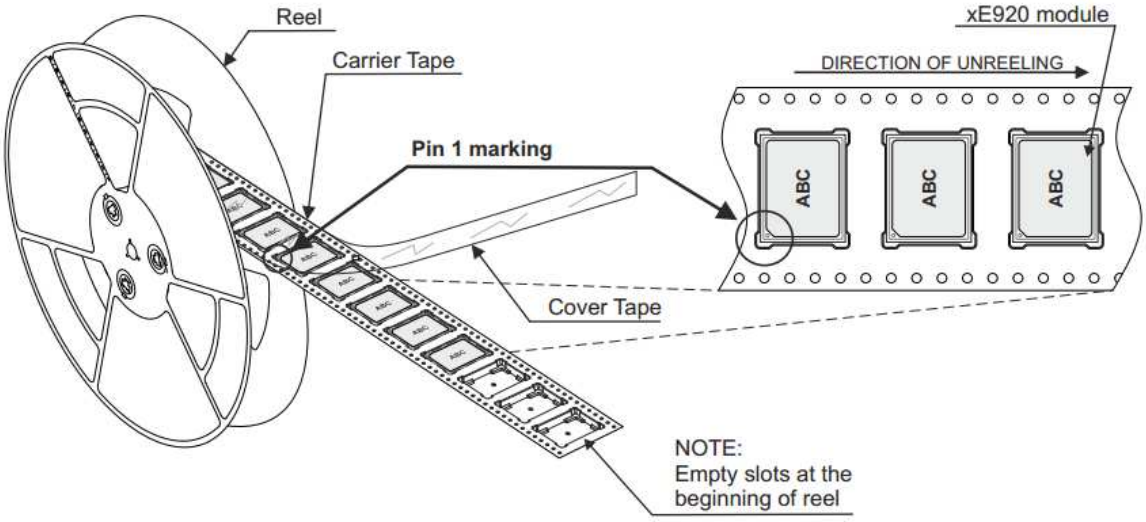

Figure 33: Carrier Tape Detail

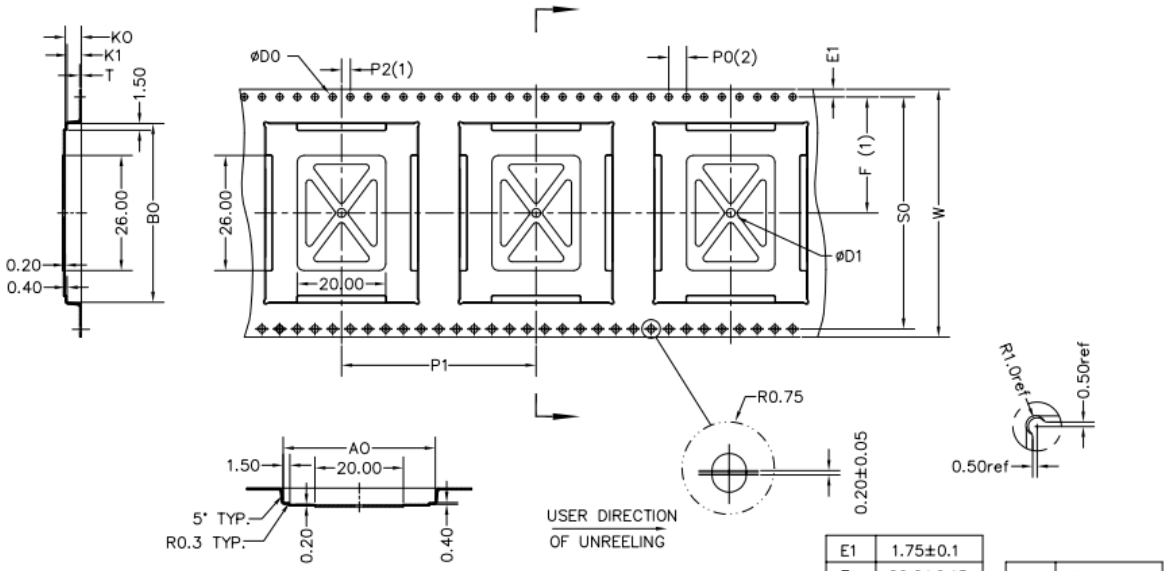

E1	1.75±0.1
F	26.2±0.15
P2	2.0±0.15
D0	$1.5^{+0.1}_{-0.0}$
D1	2.0MIN
P0	4.0±0.1
SO	52.4±0.1
10P0	40.0±0.2

AO	34.4±0.1
BO	40.4±0.1
KO	3.65±0.1
K1	3.25±0.1
T	0.4±0.05
P1	44.0±0.1
W	56.0±0.3

Figure 34: Reel Detail

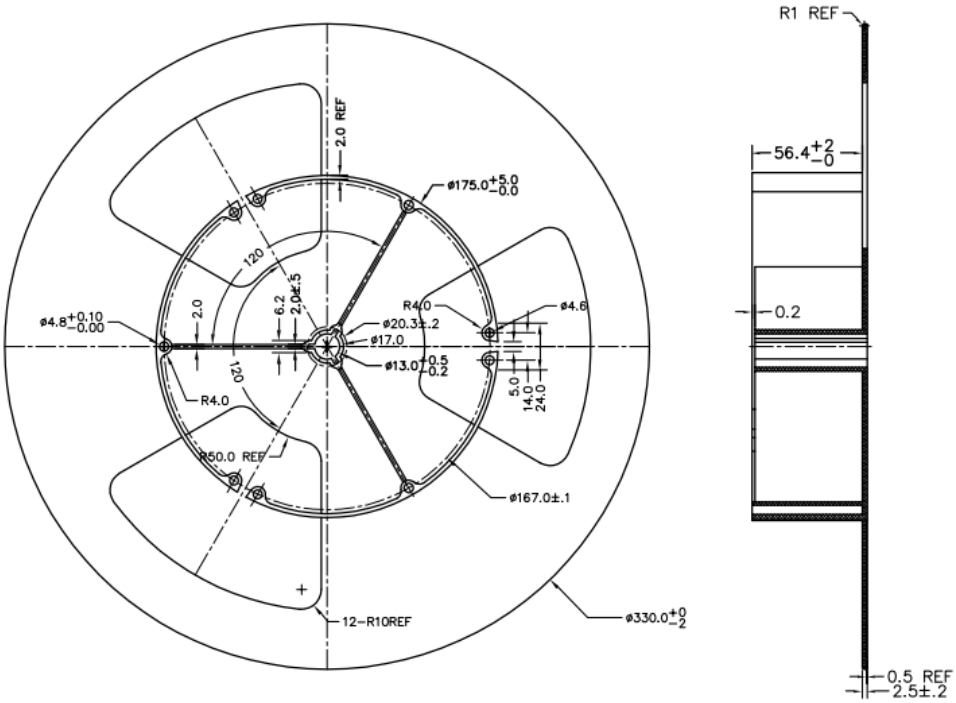

Figure 35: Reel Box Detail

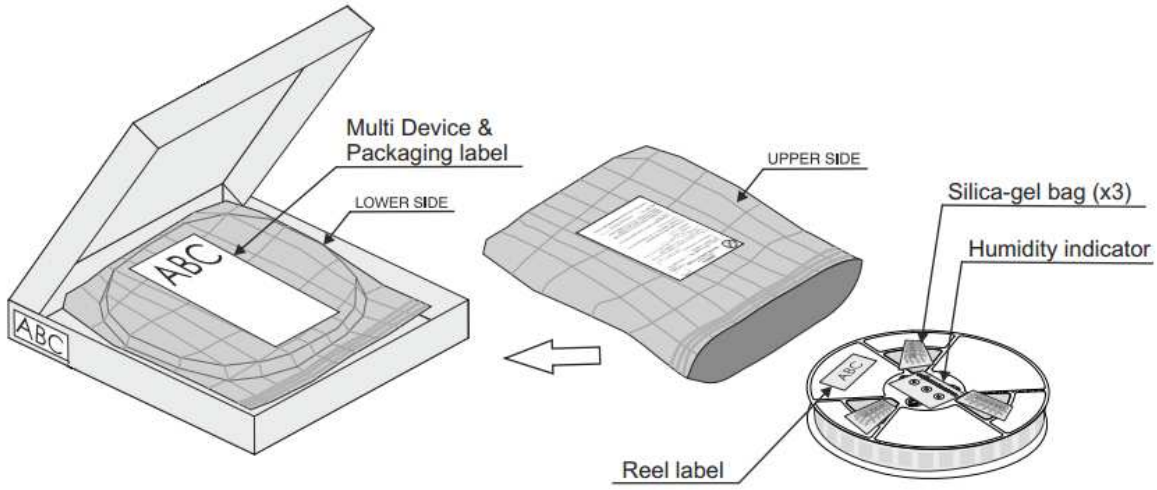

12.3. Moisture Sensitivity

The module is a Moisture Sensitive Device Level 3, in accordance with standard IPC/JEDEC J-STD-020. Observe all the requirements for using this kind of component.

13. Safety Recommendations

READ CAREFULLY

Be sure that the use of this product is allowed in your country and in the environment required. The use of this product may be dangerous and must be avoided in the following areas:

- Where it can interfere with other electronic devices in environments such as hospitals, airports, aircrafts, etc.
- Where there is risk of explosion such as gasoline stations, oil refineries, etc.

It is the responsibility of the user to enforce the country regulations and the specific environment regulations.

Do not disassemble the product; any mark of tampering will compromise the warranty validity.

It is recommended following the instructions of the hardware user guides for correct wiring of the product. The product must be supplied with a stabilized voltage source and the wiring conform to the security and fire prevention regulations.

The product must be handled with care, avoiding any contact with the pins because electrostatic discharges may damage the product itself. The same caution must be taken for the SIM, checking carefully the instructions for its use. Do not insert or remove the SIM when the product is in power saving mode.

The system integrator is responsible for the functioning of the final product; therefore, care must be taken of the external components of the module, as well as of any project or installation issue, because of the risk of disturbing the GSM network or external devices or having any impact on safety. Should there be any doubt, please refer to the technical documentation and the regulations in force.

Every module must be equipped with a proper antenna with the specified characteristics. The antenna must be installed with care in order to avoid any interference with other electronic devices and must be installed with the guarantee of a minimum 20 cm distance from a human body. In case this requirement cannot be satisfied, the system integrator must assess the final product against the SAR regulation.

The European Community provides some Directives for electronic equipment introduced on the market. All the relevant information is available on the European Community website:

http://europa.eu.int/comm/enterprise/rtte/dir99-5.htm

The text of the Directive 99/05 regarding telecommunication equipment is available, while the applicable Directives (Low Voltage and EMC) are available at:

http://europa.eu.int/comm/enterprise/rtte/dir99-5.htm

14. Conformity assessment issues

14.1. FCC/ISED Regulatory notices

Modification statement

Titan has not approved any changes or modifications to this device by the user. Any changes or modifications could void the user's authority to operate the equipment.

Titan n'approuve aucune modification apportée à l'appareil par l'utilisateur, quelle qu'en soit la nature. Tout changement ou modification peuvent annuler le droit d'utilisation de l'appareil par l'utilisateur.

Interference statement (if it is not placed in the device)

This device complies with Part 15 of the FCC Rules and Industry Canada licence-exempt RSS standard(s). Operation is subject to the following two conditions: (1) this device may not cause interference, and (2) this device must accept any interference, including interference that may cause undesired operation of the device.

Le présent appareil est conforme aux CNR d'Industrie Canada applicables aux appareils radio exempts de licence. L'exploitation est autorisée aux deux conditions suivantes : (1) l'appareil ne doit pas produire de brouillage, et (2) l'utilisateur de l'appareil doit accepter tout brouillage radioélectrique subi, même si le brouillage est susceptible d'en compromettre le fonctionnement.

Wireless notice

This device complies with FCC/ISED radiation exposure limits set forth for an uncontrolled environment and meets the FCC radio frequency (RF) Exposure Guidelines and RSS-102 of the ISED radio frequency (RF) Exposure rules. Antenna gain must be below:

Band	Freq [MHz]	Gain [dBi]
GSM 850	850	3.64
EGPRS 850	850	3.64
PCS 1900	1900	2.51
EGPRS 1900	1900	2.51
WCDMA Band 2	1900	8.01
WCDMA Band 4	1700	5.00
WCDMA Band 5	850	5.00
FDD II	1900	8.01
FDD IV	1700	5.00
FDD V	850	5.00
FDD VII	700	8.01
FDD XII	700	5.63

This transmitter must not be co-located or operating in conjunction with any other antenna or transmitter.

Le présent appareil est conforme à l'exposition aux radiations FCC / ISED définies pour un environnement non contrôlé et répond aux directives d'exposition de la fréquence de la FCC

radiofréquence (RF) et RSS-102 de la fréquence radio (RF) ISED règles d'exposition. Gain de l'antenne doit être ci-dessous:

Band	*Freq [MHz]*	*Gain [dBi]*
GSM 850	850	3.64
EGPRS 850	850	3.64
PCS 1900	1900	2.51
EGPRS 1900	1900	2.51
WCDMA Band 2	1900	8.01
WCDMA Band 4	1700	5.00
WCDMA Band 5	850	5.00
FDD II	1900	8.01
FDD IV	1700	5.00
FDD V	850	5.00
FDD VII	700	8.01
FDD XII	700	5.63

L'émetteur ne doit pas être colocalisé ni fonctionner conjointement avec à autre antenne ou autre émetteur.

FCC Class B digital device notice

This equipment has been tested and found to comply with the limits for a Class B digital device, pursuant to part 15 of the FCC Rules. These limits are designed to provide reasonable protection against harmful interference in a residential installation. This equipment generates, uses and can radiate radio frequency energy and, if not installed and used in accordance with the instructions, may cause harmful interference to radio communications. However, there is no guarantee that interference will not occur in a particular installation. If this equipment does cause harmful interference to radio or television reception, which can be determined by turning the equipment off and on, the user is encouraged to try to correct the interference by one or more of the following measures:

- Reorient or relocate the receiving antenna.
- Increase the separation between the equipment and receiver.
- Connect the equipment into an outlet on a circuit different from that to which the receiver is connected.
- Consult the dealer or an experienced radio/TV technician for help.

LE920A4 NA

Contains FCC ID: 2AUECLE920A4NA
Contains IC: 25635-LE920A4NA

CAN ICES-3 (B) / NMB-3 (B)

This Class B digital apparatus complies with Canadian ICES-003.

Cet appareil numérique de classe B est conforme à la norme canadienne ICES *-003.*

14.2. Declaration of Conformity

Hereby, Titan declares that the radio equipment type LE920A4-EU is in compliance with Directive 2014/53/EU.
The full text of the EU declaration of conformity is available at the following internet address:
www.tustitan.com/RED

15. Acronyms

ADC	Analog-to-Digial Converter
AE	Application-enabled
CLK	Clock
CMOS	Complementary Metal – Oxide Semiconductor
CS	Chip Select
DAC	Digital-to-Analog Converter
DTE	Data Terminal Equipment
ESR	Equivalent Series Resistance
FDD	Frequency Division Duplex
GLONASS	Global Orbiting Navigation Satellite System
GNSS	Global Navigation Satellite System
GPIO	General Purpose Input/Output
GPRS	General Packet Radio Services
GPS	Global Positioning System
GSM	Global System for Mobile communications
HS	High Speed
HSDPA	High-Speed Downlink Packet Access
HSIC	High-Speed Inter-Chip

HSUPA	High-Speed Uplink Packet Access
I/O	Input/Output
I2C	Inter-Integrated Circuit
LTE	Long Term Evolution
MISO	Master Input – Slave Output
MOSI	Master Output – Slave Input
MRDY	Master Ready
PCB	Printed Circuit Board
RTC	Real Time Clock
SD	Secure Digital
SGMII	Serial Gigabit Media-Independent Interface
SIM	Subscriber Identification Module
SOC	System-on-Chip
SPI	Serial Peripheral Interface
SRDY	Slave Ready
TTSC	Titan Technical Support Centre
UART	Universal Asynchronous Receiver Transmitter
UMTS	Universal Mobile Telecommunication System
USB	Universal Serial Bus

VNA	Vector Network Analyzer
VSWR	Voltage Standing Wave Radio
WCDMA	Wideband Code Division Multiple Access
WCI	Wireless Coexistence Interface

16. Document History

Table 50: Document History

Revision	Date	Changes
4.7.1	2019-11-21	- Telit logo and “Telit” name were replaced to Titan. Section 14.1 - FCC ID and IC were updated from Telit to Titan.
4.7	2019-08-04	Section 2.7.1 – Change Sensitivity results from “Maximum” to “typical” and added TD-SCDMA in 3G section and TDD to 4G section.
4.6	2018-12-18	Section 8.7 - Removed reference to unsupported GPIO’s Section 9.7 – Update wording Section 10.6 – Clarified pad surface finish material
4.5	2018-09-12	Section 2.3 - Updated SIM clock supported rate Section 8.2 - Updated support mode of HSIC Section 8.3.2 Clarified logic levels specification of Ethernet control I/F Section 9.7 – Added section specifying GPS_SYNC
4.4	2018-03-21	Section 3.1 - Updated value of SIM internal pullup Section 6.2.2 – Added average GPS current Section 8.5.4 – Removed note related to WIFI_SDRST Section 8.7 - Added notes related to GPIO pullups Section 9.7 - Updated GNSS sensitivity values Section 10.8 – Added clarification related to flux cleaning
4.3	2018-03-03	Section 5.5 – Added section for clarifying power down and power off procedures Section 6.2.2 – Added clarification regarding GPRS support per product variants Section 11.6 - Added note related to Antenna detection implementation Section 14.2 - Added "Declaration of Conformity" for RED.

Revision	Date	Changes
4.2	2017-11-23	Section 2.7 – Renamed from Sensitivity to RF parameters and added TX output power section (2.7.2) Section 3.1 - Removed duplication of description related to USB_VBUS. Section 3.1 – Correct typo related to ETH_INT_N pin. Section 5.2 – Added clarification regarding ON_OFF. Section 7.5 – Added note related to GPS port and GPS LNA. Section 8.1 – Added clarification regarding VBUS supply. Section 8.1.1 – Added description for OTG connectivity. Section 8.3 - Added reference to Ethernet card application note. Section 8.3 – Added clarification regarding ETH_INT_N pin. Section 8.6.2 – Updated analog Microphone parameter. Section 14.1 – Updated GSM 850MHz and EGPRS 850MHz Max antenna gain.
4.1	2017-08-08	Section 2.8 – Added note about the module label thickness Section 8.4.1 – Clarified a note related to DTR
4	2017-07-12	Document formatting by a New Template Section 2.6.1, Table 5 - Modified RF bands of the AP variant Section 11.5 – Modified text Section 12.1 – The Minimum Order Quantity is 24 units
3.5	2017-04-05	Updated reference documents table Section 8.4 - Added note regarding DTR Section 8.6 – Added Analog Audio Characteristics Section 11.4 – Updated ESD values
3.4	2017-04-05	Section 2.6.2 – Changed B41 to B41M Adding Section 14: FCC/ISED Regulatory notices

Revision	Date	Changes
3.3	2017-01-03	Remove “Preliminary” label Section 1.5: Updated “Related Documents” table Section 2.3: Added more info on memory supported options Section 3.1: Added PHY control interface Section 3.3: Updated LGA “PinMap” Drawing Section 5.3.3: Added clarification about RESET_N usage Section 5.3.4: Added Figure for SHDN_N power down timing Section 8.1: Added info related to USB OTG Section 8.3: Added info related to PHY control interface Section 8.5.3: Added clarification about VMMC Section 8.6.2: Added clarification about I2S support Section 9.2: Added clarification about RTC Section 9.7: Added GNSS characteristics Section 10.2: Updated mechanical drawing Section 10.3: Updated application footprint drawing
3.2	2016-12-16	Updated Applicability table
3.1	2016-11-27	Section 4.3.2 : Added note regarding pull resistance of special GPIO’s. Section 8.7.2 : Added info regarding wakeup from GPIO’s. Section 10.3 : Updated application board footprint drawing Section 1.5 : Updated link to WIFI application note

Revision	Date	Changes
3.0	2016-09-01	Official Release; Merged and updated the Applicability table (p.2) based on previous Section 1.6 Section 1.5 : Updated the table of related documents Section 2.6.1 : Updated the table of RF bands Section 3.1 : Few updates in the table of pin-out Section 6.1 : Added voltage ripple requirement Section 6.1: Table 18 : Added current consumption values Section 9.1: Updated description Section 9.2: Updated the RTC consumption Section 9.4.1: Updated description Section 11.5: Added sub-sections 11.5.1 and 11.5.2 Section 12: Updated table Section 12.2 : Added information about Tape & Reel packing General editing and formatting
2.7	2016-06-15	Official Release; Sec. 2.5.1: Storage temp. is 105 deg.C max. Sec. 3.1 : Updates about pads E8, AN8 Previous Sec. 4.2 (Limiting Values) – Removed New Sec. 4.2 : Updated min. supply voltage levels Sec 4.3 : Updated Logic Level Specification Sec 5.3.3: Updated Reset connection (added future support) Sec 5.2: Updated “Initialization and Activation state” Sec. 5.3.3 : Added recommendation and diagram for future compatibility Sec. 8 : All hardware interfaces are gathered under this section A summary table of the module interfaces is presented Updated number of available GPIO’s inside the summary table Sec. 8.6.2 : Updated the Digital Audio specifications Sec. 9.4.1 : Updated the ADC range of input level Sec. 10.3 : Updated the “Recommended footprint” figure (was previously mistaken) Added “PRELIMINARY” on top of each page

Revision	Date	Changes
2.2	2016-04-12	Official Release; Moved RoHS paragraph from 2.8.3 to 2.5.1 Sections 4.3 & 6.1: VBAT min is 3.4V (not 3.3V) Added Sec. 15.5 (now 9.5): Temperature Monitor Function
2.0	2016-03-23	Official Release; General update – Added Datasheet related sections Added Sec. 1.6: Product Variants Added Sec. 2.2: Applications Added Sec. 2.3: General Functionality Added Sec. 2.4: Block Diagram Modified Sec. 2.6: Frequency Bands Added Sec. 3: Functional Description Changed ESD values to TBD (until tested) Added Sec. 5: Backward compatibility to LE920 Modified Sec. 7.5 : GNSS Antenna Requirements Added Sec. 15.6 (now 9.6): Fuel Gauge Added Sec. 17.6 (now 11.6): Antenna Detection
1.0	2016-02-14	Official Release; Section 2.5.1: Channels corrected for WCDMA B4. Section 2.5.1: LTE B17 replaced by LTE B12 Section 2.5.2: Added table for LE920A4 -EU Section 2.6: Sensitivity typical values updated Section 7.1: Main antenna requirements updated Section 7.4: Diversity antenna requirements updated
0.5	2015-12-20	First Draft

TITAN