LE920
Hardware User Guide

1vv0301026 Rev.11 - 2019-11-21

APPLICABILITY TABLE

PRODUCT
LE920-NA (cs1701)

APPLICABILITY TABLE 1

Reproduction forbidden without written authorization from Titan Automotive Solutions NV. - All Rights Reserved.

SPECIFICATIONS SUBJECT TO CHANGE WITHOUT NOTICE

Notice

While reasonable efforts have been made to assure the accuracy of this document, Titan assumes no liability resulting from any inaccuracies or omissions in this document, or from use of the information obtained herein. The information in this document has been carefully checked and is believed to be entirely reliable. However, no responsibility is assumed for inaccuracies or omissions. Titan reserves the right to make changes to any products described herein and reserves the right to revise this document and to make changes from time to time in content hereof with no obligation to notify any person of revisions or changes. Titan does not assume any liability arising out of the application or use of any product, software, or circuit described herein; neither does it convey license under its patent rights or the rights of others.

It is possible that this publication may contain references to, or information about Titan products (machines and programs), programming, or services that are not announced in your country. Such references or information must not be construed to mean that Titan intends to announce such Titan products, programming, or services in your country.

Copyrights

This instruction manual and the Titan products described in this instruction manual may be, include or describe copyrighted Titan material, such as computer programs stored in semiconductor memories or other media. Laws in the Italy and other countries preserve for Titan and its licensors certain exclusive rights for copyrighted material, including the exclusive right to copy, reproduce in any form, distribute and make derivative works of the copyrighted material. Accordingly, any copyrighted material of Titan and its licensors contained herein or in the Titan products described in this instruction manual may not be copied, reproduced, distributed, merged or modified in any manner without the express written permission of Titan. Furthermore, the purchase of Titan products shall not be deemed to grant either directly or by implication, estoppel, or otherwise, any license under the copyrights, patents or patent applications of Titan, as arises by operation of law in the sale of a product.

Computer Software Copyrights

The Titan and 3rd Party supplied Software (SW) products described in this instruction manual may include copyrighted Titan and other 3rd Party supplied computer programs stored in semiconductor memories or other media. Laws in the Italy and other countries preserve for Titan and other 3rd Party supplied SW certain exclusive rights for copyrighted computer programs, including the exclusive right to copy or reproduce in any form the copyrighted computer program. Accordingly, any copyrighted Titan or other 3rd Party supplied SW computer programs contained in the Titan products described in this instruction manual may not be copied (reverse engineered) or reproduced in any manner without the express written permission of Titan or the 3rd Party SW supplier. Furthermore, the purchase of Titan products shall not be deemed to grant either directly or by implication, estoppel, or otherwise, any license under the copyrights, patents or patent applications of Titan or other 3rd Party supplied SW, except for the normal non-exclusive, royalty free license to use that arises by operation of law in the sale of a product.

Reproduction forbidden without written authorization from Titan Automotive Solutions NV. - All Rights Reserved.

Usage and Disclosure Restrictions

License Agreements

The software described in this document is the property of Titan and its licensors. It is furnished by express license agreement only and may be used only in accordance with the terms of such an agreement.

Copyrighted Materials

Software and documentation are copyrighted materials. Making unauthorized copies is prohibited by law. No part of the software or documentation may be reproduced, transmitted, transcribed, stored in a retrieval system, or translated into any language or computer language, in any form or by any means, without prior written permission of Titan

High Risk Materials

Components, units, or third-party products used in the product described herein are NOT fault-tolerant and are NOT designed, manufactured, or intended for use as on-line control equipment in the following hazardous environments requiring fail-safe controls: the operation of Nuclear Facilities, Aircraft Navigation or Aircraft Communication Systems, Air Traffic Control, Life Support, or Weapons Systems (“High Risk Activities"). Titan and its supplier(s) specifically disclaim any expressed or implied warranty of fitness for such High Risk Activities.

Trademarks

The Titan Logo is a registered trademark. All other product or service names are the property of their respective owners.

Copyright © Titan Automotive Solutions NV.

Reproduction forbidden without written authorization from Titan Automotive Solutions NV. - All Rights Reserved.

Contents

1. Introduction 9
1.1. Scope 9
1.2. Audience 9
1.3. Contact Information, Support 9
1.4. Document Organization 10
1.5. Text Conventions 11
1.6. Related Documents 11
2. General Product Description 12
2.1. Overview 12
2.2. LE920 Mechanical Dimensions 13
2.3. Weight 13
2.4. Environmental requirements 14
2.4.1. Temperature range 14
2.4.2. RoHS compliance 14
2.5. Operating Frequency 15
2.5.1. LE920-EUG(cs1550f-B), LE920-EU (cs1647c) 15
EOL product 15
2.5.2. LE920-NAG (cs1550f-A) 15
EOL product 15
2.5.3. LE920-NA (cs1701), LE920-NA AUTO S (cs1717) 15
2.5.4. LE920-CN (cs1648D) 16
EOL product 16
2.6. Sensitivity 16
2.7. Conformity assessment issues 16
2.7.1. FCC/IC Regulatory notices 16
2.7.1.1. Modification statement 16
2.7.1.2. Interference statement 16
2.7.1.3. RF exposure 17
2.7.1.4. FCC Class B digital device notice 17
2.7.1.5. Labelling Requirements for the Host device 18
3. LE920 Module Connections 19
3.1. PIN-OUT 19
3.1.1. LGA Pads Layout 26

Reproduction forbidden without written authorization from Titan Automotive Solutions NV. - All Rights Reserved.

4. Hardware Commands 27
4.1. Turning ON the LE920 27
4.2. Initialization and Activation state 27
4.3. Turning OFF the LE920 28
4.3.1. Shutdown by Software Command 29
4.3.2. Hardware Shutdown 30
4.3.3. Hardware Unconditional Restart (RESET) 31
4.3.4. Hardware Unconditional Shutdown 32
4.4. Summary of Turning ON and OFF the module 33
5. Power Supply 34
5.1. Power Supply Requirements 34
5.2. General Design Rules 36
5.2.1. Electrical Design Guidelines 36
5.2.1.1. + 5V Input Source Power Supply Design Guidelines 36
5.2.1.2. + 12V Input Source Power Supply Design Guidelines 37
5.2.1.3. Battery Source Power Supply Design Guidelines 39
5.2.2. Thermal Design Guidelines 40
5.2.3. Power Supply PCB Layout Guidelines 41
6. Antenna(s) 43
6.1. GSM/WCDMA/LTE Antenna Requirements 43
6.2. GSM/WCDMA/LTE Antenna – PCB line Guidelines 44
6.3. GSM/WCDMA/LTE Antenna – Installation Guidelines 45
6.4. Antenna Diversity Requirements 45
6.5. GPS/GNSS Antenna Requirements 46
6.5.1. Combined GPS/GNSS Antenna 47
6.5.2. Linear and Patch GPS/GNSS Antenna 47
6.5.3. Front End Design Considerations 47
6.5.4. GPS/GNSS Antenna - PCB Line Guidelines 48
6.5.5. GPS/GNSS Antenna – Installation Guidelines 48
7. Logic Level Specifications 49
8. USB Port 50
9. Serial Ports 51
9.1. Modem Serial Port 1 52
9.2. Modem Serial Port 2 53

Reproduction forbidden without written authorization from Titan Automotive Solutions NV. - All Rights Reserved.

9.3. RS232 Level Translation 53

10. Peripheral Ports 55

10.1. SPI – Serial Peripheral Interface 55

10.2. I2C - Inter-integrated circuit 56

10.3. SDIO – Secure Digital I/O 56

10.4. Wi-Fi (SDIO) control Interface 58

11. Audio Section Overview 59

11.1. Analog Audio 59

11.2. Digital Audio 59

12. General Purpose I/O 61

12.1. Logic Level Specifications 62

12.2. Using a GPIO Pad as Input 62

12.3. Using a GPIO Pad as Output 63

12.4. Using the Temperature Monitor Function 63

12.4.1. Short Description 63

12.5. Indication of Network Service Availability 64

12.6. RTC Bypass 65

12.7. VAUX Power Output 65

13. ADC section 66

13.1. ADC Converter 66

13.1.1. Description 66

13.1.2. Using ADC Converter 66

14. Mounting the module on your board 67

14.1. General 67

14.2. Finishing & Dimensions 67

14.3. Recommended foot print for the application 68

14.4. Stencil 69

14.5. PCB Pad Design 69

14.6. Recommendations for PCB Pad Dimensions (mm) 70

14.7. Solder Paste 71

14.7.1. Solder Reflow 71

Reproduction forbidden without written authorization from Titan Automotive Solutions NV. - All Rights Reserved.

15. Application guide 73
15.1. Debug of the LE920 in production 73
15.2. Bypass capacitor on Power supplies 74
15.3. SIM interface 75
15.3.1. SIM schematic example 75
15.3.2. eSIM interface guidelines 76
15.4. EMC recommendations 78
15.5. Download and Debug Port 79
16. Packing system 80
16.1. Tray Drawing 82
16.2. Moisture Sensitivity 83
17. Safety Recommendations 84
18. Document History 85
- Adding section 2.7 Conformity assessment issues 86
- Section 5.1 – GPRS, EDGE slots corrected to 1TX+4RX 86

Reproduction forbidden without written authorization from Titan Automotive Solutions NV. - All Rights Reserved.

1. Introduction

1.1. Scope

The aim of this document is to present possible and recommended hardware solutions useful for developing a product with the Titan LE920 module. All the features and solutions detailed are applicable to all LE920, where “LE920” refers to the modules listed in the applicability table.

If a specific feature is applicable to a specific product, it will be clearly highlighted.

NOTICE:

The description text “LE920” refers to all modules listed in the APPLICABILITY TABLE 1.

1.2. Audience

This document is intended for Titan customers, especially system integrators, about to implement their applications using our LE920 module.

1.3. Contact Information, Support

For general contact, technical support, to report documentation errors and to order manuals, contact Titan Technical Support via Team forge CollabNet.

https://ctf.tustitan.com/

Alternatively, get in touch with your usual Titan contact.

For more information about Titan visit:

http://www.tustitan.com

To register for product news and announcements or for product questions contact Titan Technical Support. Our aim is to make this guide as helpful as possible. Keep us informed of your comments and suggestions for improvements.

Titan appreciates feedback from the users of our information.

Reproduction forbidden without written authorization from Titan Automotive Solutions NV. - All Rights Reserved.

1.4. Document Organization

This document contains the following chapters:

Chapter 1: "Introduction" provides a scope for this document, target audience, contact and support information, and text conventions.

Chapter 2: "General Product Description" gives an overview of the features of the product.

Chapter 3: "LE920 Module Connections" deals with the pin out configuration and layout.

Chapter 4: "Hardware Commands" instructs how to control the module via hardware

Chapter 5: "Power Supply" deals with supply and consumption.

Chapter 6: "Antenna" The antenna connection and board layout design are the most important parts in the full product design

Chapter 7: "Logic Level specifications" Specific values adopted in the implementation of logic levels for this module.

Chapter 8: "USB Port"

Chapter 9: "Serial Ports"

Chapter 10: "Peripheral Ports"

Chapter 11: "Audio Section Overview"

Chapter 12: "General Purpose I/O" How the general purpose I/O pads can be configured.

Chapter 13 "DAC and ADC Section" Deals with these two kind of analog converters.

Chapter 14: "Mounting the module on your board"

Chapter 15: "Application Guides"

Chapter 16: "Packing System"

Chapter 17: "Safety Recommendations"

Chapter 18: "Document History"

Reproduction forbidden without written authorization from Titan Automotive Solutions NV. - All Rights Reserved.

1.5. Text Conventions

Danger – This information MUST be followed or catastrophic equipment failure or bodily injury may occur.

Caution or Warning – Alerts the user to important points about integrating the module, if these points are not followed, the module and end user equipment may fail or malfunction.

Tip or Information – Provides advice and suggestions that may be useful when integrating the module.

All dates are in ISO 8601 format, i.e. YYYY-MM-DD.

1.6. Related Documents

- LE920-EUG/NAG Product Description, 80407ST10118A
- LE920-EUG/NAG AT command reference guide, 80407ST10116A
- Titan EVK2 User Guide, 1vv0300704
- Titan xE920 Audio Settings Application Note, 80404NT10095A

Reproduction forbidden without written authorization from Titan Automotive Solutions NV. - All Rights Reserved.

2. General Product Description

2.1. Overview

The aim of this document is to present possible and recommended hardware solutions useful for developing a product with the Titan LE920 module.

In this document all the basic functions of a wireless module will be taken into account; for each one of them a valid hardware solution will be suggested and usually incorrect solutions and common errors to be avoided will be highlighted. Obviously this document cannot embrace every hardware solution or every product that may be designed. Obviously avoiding invalid solutions must be considered as mandatory. Whereas the suggested hardware configurations need not be considered mandatory, the information given should be used as a guide and a starting point for properly developing your product with the Titan LE920 module.

.

NOTICE:

The integration of the GSM/GPRS/EGPRS/WCDMA/HSPA+/LTE LE920 cellular module within user application must be done according to the design rules described in this manual.

The information presented in this document is believed to be accurate and reliable. However, no responsibility is assumed by Titan Communication S.p.A. for its use, such as any infringement of patents or other rights of third parties which may result from its use. No license is granted by implication or otherwise under any patent rights of Titan Communication S.p.A. other than for circuitry embodied in Titan products. This document is subject to change without notice.

Reproduction forbidden without written authorization from Titan Automotive Solutions NV. - All Rights Reserved.

2.2. LE920 Mechanical Dimensions

The Titan LE920 module overall dimensions are:

- Length: 34 mm , +/- 0.15 mm Tolerance
- Width: 40 mm , +/- 0.15 mm Tolerance
- Thickness: 2.9 mm , +/- 0.13 mm Tolerance

2.3. Weight

The module weight of LE920 is about 9.0 gram.

Reproduction forbidden without written authorization from Titan Automotive Solutions NV. - All Rights Reserved.

2.4. Environmental requirements

2.4.1. Temperature range

Operating Temperature Range	–40°C ~ +85°C
Storage and non-operating Temperature Range	–40°C ~ +85°C

2.4.2. RoHS compliance

As a part of Titan corporate policy of environmental protection, the LE920 complies with the RoHS (Restriction of Hazardous Substances) directive of the European Union (EU directive 2011/65/EU).

Reproduction forbidden without written authorization from Titan Automotive Solutions NV. - All Rights Reserved.

2.5. Operating Frequency

The operating frequencies in GSM850, EGSM900, DCS1800, PCS1900, WCDMA & LTE modes are conformed to the 3GPP specifications.

2.5.1. LE920-EUG(cs1550f-B), LE920-EU (cs1647c)

EOL product

2.5.2. LE920-NAG (cs1550f-A)

EOL product

2.5.3. LE920-NA (cs1701), LE920-NA AUTO S (cs1717)

Mode	Freq. TX (MHz)	Freq. RX (MHz)	Channels	TX - RX offset
GSM850	824 ~ 849	869 ~ 894	128 ~ 251	45 MHz
PCS1900	1850 ~ 1910	1930 ~ 1990	512 ~ 810	80MHz
WCDMA1900 – B2	1850 ~ 1910	1930 ~ 1990	Tx: 9262 ~ 9538 Rx: 9662 ~ 9938	80MHz
WCDMA1700 – B4	1710 ~ 1755	2110 ~ 2155	Tx: 1312 ~ 1513 Rx: 1537 ~ 1738	400 MHz
WCDMA850 – B5	824 ~ 849	869 ~ 894	Tx: 4132 ~ 4233 Rx: 4357 ~ 4458	45MHz
LTE1900 – B2	1850 ~ 1910	1930 ~ 1990	Tx: 18600 ~ 19199 Rx: 600 ~ 1199	80MHz
LTE1700 – B4	1710~ 1755	2110 ~ 2155	Tx: 19950 ~ 20399 Rx: 1950 ~ 2399	400MHz
LTE850 – B5	824 ~ 849	869 ~ 894	Tx: 20400 ~ 20649 Rx: 2400 ~ 2649	45MHz
LTE2600 – B7	2500 ~ 2570	2620 ~ 2690	Tx: 20750 ~ 21449 Rx: 2750 ~ 3449	120MHz
LTE700 – B12	699 ~ 716	729 ~ 746	Tx: 23010 ~ 23179 Rx: 5010 ~ 5179	30MHz

Reproduction forbidden without written authorization from Titan Automotive Solutions NV. - All Rights Reserved.

2.5.4. LE920-CN (cs1648D)

EOL product

2.6. Sensitivity

LE920 maximum sensitivity levels are as follow:

- -113 dBm @ 2G
- -112 dBm @ 3G
- -111 dBm @ TD-SCDMA (BW=1.6MHz)
- -102 dBm @ 4G FDD (BW=5MHz)
- -101 dBm @ 4G TDD (BW=5MHz)

2.7. Conformity assessment issues

2.7.1. FCC/IC Regulatory notices

2.7.1.1. Modification statement

Titan has not approved any changes or modifications to this device by the user. Any changes or modifications could void the user's authority to operate the equipment.

Titan n'approuve aucune modification apportée à l'appareil par l'utilisateur, quelle qu'en soit la nature. Tout changement ou modification peuvent annuler le droit d'utilisation de l'appareil par l'utilisateur.

2.7.1.2. Interference statement

This device complies with Part 15 of the FCC Rules and Industry Canada licence-exempt RSS standard(s). Operation is subject to the following two conditions: (1) this device may not cause interference, and (2) this device must accept any interference, including interference that may cause undesired operation of the device.

Le présent appareil est conforme aux CNR d'Industrie Canada applicables aux appareils radio exempts de licence. L'exploitation est autorisée aux deux conditions suivantes : (1) l'appareil ne doit pas produire de brouillage, et (2) l'utilisateur de l'appareil doit accepter tout brouillage radioélectrique subi, même si le brouillage est susceptible d'en compromettre le fonctionnement.

Reproduction forbidden without written authorization from Titan Automotive Solutions NV. - All Rights Reserved.

2.7.1.3. RF exposure

This equipment complies with FCC and IC radiation exposure limits set forth for an uncontrolled environment. The antenna should be installed and operated with minimum distance of 20 cm between the radiator and your body. Antenna gain must be below:

Frequency band	Antenna gain
700 MHz	5,66 dBi
850 MHz	6,13 dBi
1700 MHz	5,00 dBi
1900 MHz	8,01 dBi
2600 MHz	8,01 dBi

This transmitter must not be co-located or operating in conjunction with any other antenna or transmitter.

Cet appareil est conforme aux limites d'exposition aux rayonnements de la IC pour un environnement non contrôlé. L'antenne doit être installé de façon à garder une distance minimale de 20 centimètres entre la source de rayonnements et votre corps. Gain de l'antenne doit être ci-dessous:

Bande de fréquence	*Gain de l'antenne*
700 MHz	5,66 dBi
850 MHz	6,13 dBi
1700 MHz	5,00 dBi
1900 MHz	8,01 dBi
2600 MHz	8,01 dBi

L'émetteur ne doit pas être colocalisé ni fonctionner conjointement avec à autre antenne ou autre émetteur.

2.7.1.4. FCC Class B digital device notice

This equipment has been tested and found to comply with the limits for a Class B digital device, pursuant to part 15 of the FCC Rules. These limits are designed to provide reasonable protection against harmful interference in a residential installation. This equipment generates, uses and can radiate radio frequency energy and, if not installed and used in accordance with the instructions, may cause harmful interference to radio communications. However, there is no guarantee that interference will not occur in a particular installation. If this equipment does cause harmful interference to radio or television reception, which can be determined by turning the equipment off and on, the user is encouraged to try to correct the interference by one or more of the following measures:

- Reorient or relocate the receiving antenna.
- Increase the separation between the equipment and receiver.
- Connect the equipment into an outlet on a circuit different from that to which the receiver is connected.

Reproduction forbidden without written authorization from Titan Automotive Solutions NV. - All Rights Reserved.

- Consult the dealer or an experienced radio/TV technician for help.

2.7.1.5. Labelling Requirements for the Host device

The host device shall be properly labelled to identify the modules within the host device. The certification label of the module shall be clearly visible at all times when installed in the host device, otherwise the host device must be labelled to display the FCC ID and IC of the module, preceded by the words "Contains transmitter module", or the word "Contains", or similar wording expressing the same meaning, as follows:

Contains FCC ID: 2AUECLE920NA1
Contains IC: 25635-LE920NA1

L'appareil hôte doit être étiqueté comme il faut pour permettre l'identification des modules qui s'y trouvent. L'étiquette de certification du module donné doit être posée sur l'appareil hôte à un endroit bien en vue en tout temps. En l'absence d'étiquette, l'appareil hôte doit porter une étiquette donnant le FCC ID et le IC du module, précédé des mots « Contient un module d'émission », du mot « Contient » ou d'une formulation similaire exprimant le même sens, comme suit:

Contains FCC ID: 2AUECLE920NA1
Contains IC: 25635-LE920NA1

CAN ICES-3 (B) / NMB-3 (B)

This Class B digital apparatus complies with Canadian ICES-003.

Cet appareil numérique de classe B est conforme à la norme canadienne ICES-003.

Reproduction forbidden without written authorization from Titan Automotive Solutions NV. - All Rights Reserved.

3. LE920 Module Connections

3.1. PIN-OUT

PAD	Signal	I/O	Function	Type	COMMENT
USB HS 2.0 Communication Port					
D19	USB_D+	I/O	USB differential Data(+)		
F19	USB_D-	I/O	USB differential Data(-)		
A18	USB_VBUS	AI	Power sense for the internal USB transceiver	Power	2.2V – 5.25V @ max 5mA
Asynchronous UART – Prog. / data +HW Flow Control					
AH19	C103/TXD	I	Serial data input (TXD) from DTE	1.8V	
AF19	C104/RXD	O	Serial data output to DTE	1.8V	
AC18	C108/DTR	I	Input for Data terminal ready signal (DTR) from DTE	1.8V	
AA18	C105/RTS	I	Input for Request to send signal (RTS) from DTE	1.8V	
AK19	C106/CTS	O	Output for Clear to send signal (CTS) to DTE	1.8V	
AE18	C109/DCD	O	Output for Data carrier detect signal (DCD) to DTE	1.8V	
AG18	C107/DSR	O	Output for Data set ready signal (DSR) to DTE	1.8V	
AJ18	C125/RING	O	Output for Ring indicator signal (RI) to DTE	1.8V	
Asynchronous Auxiliary UART					
AB19	TXD_AUX	O	Auxiliary UART (TX Data to DTE)	1.8V	
AD19	RXD_AUX	I	Auxiliary UART (RX Data from DTE)	1.8V	
SPI – Serial Peripheral Interface					
P19	SPI_CLK	O	SPI Clock output	1.8V	
M19	SPI_MISO	I	SPI data Master Input Slave output	1.8V	
K19	SPI_MOSI	O	SPI data Master Output Slave input	1.8V	
N18	SPI_CS	O	SPI Chip select output	1.8V	
SDIO – Secure Digital I/O					
AH17	SD/MMC_CMD	O	SD Command	1.8/2.95V	
AD17	SD/MMC_CLK	O	SD Card Clock	1.8/2.95V	
Y17	SD/MMC_DATA0	I/O	SD Serial Data 0	1.8/2.95V	
AF17	SD/MMC_DATA1	I/O	SD Serial Data 1	1.8/2.95V	
AB17	SD/MMC_DATA2	I/O	SD Serial Data 2	1.8/2.95V	
W17	SD/MMC_DATA3	I/O	SD Serial Data 3	1.8/2.95V	
U17	SD/MMC_CD	I	SD card detect input	1.8V	Active Low
Wi-Fi (SDIO) control Interface					
AB3	WiFi_SD_CMD	O	Wi-Fi SD Command	1.8V	
AM3	WiFi_SD_CLK	O	Wi-Fi SD Clock	1.8V	
AD3	WiFi_SD _DATA0	I/O	Wi-Fi SD Serial Data 0	1.8V	
AF3	WiFi_SD _DATA1	I/O	Wi-Fi SD Serial Data 1	1.8V	

Reproduction forbidden without written authorization from Titan Automotive Solutions NV. - All Rights Reserved.

PAD	Signal	I/O	Function	Type	COMMENT
AH3	WiFi_SD _DATA2	I/O	Wi-Fi SD Serial Data 2	1.8V	
AK3	WiFi_SD _DATA3	I/O	Wi-Fi SD Serial Data 3	1.8V	
Y3	WiFi_RST_Ctr	O	Wi-Fi Reset output control / Power enable control	1.8V	Active Low
SIM Card Interface 1					
A10	SIMCLK1	O	External SIM signal – Clock	1.8/2.85V	
B11	SIMRST1	O	External SIM signal – Reset	1.8/2.85V	
B9	SIMIO1	I/O	External SIM signal - Data I/O	1.8/2.85V	
B7	SIMIN1	I	External SIM signal - Presence (active low)	1.8V	
A8	SIMVCC1	-	External SIM signal – Power supply for the SIM	1.8/2.85V	
E8	ESIM_RST	-	Internal eSIM signal – Reset	1.8/2.85V	
Analog Audio interface					
B5	EAR1_MT+	AO	Earphone signal output1, phase +	Audio	
A4	EAR1_MT-	AO	Earphone signal output1, phase -	Audio	
B3	MIC1_MT+	AI	Mic signal input1, phase +	Audio	
A2	MIC1_MT-	AI	Mic signal input1, phase -	Audio	
Digital Voice interface (DVI)					
D11	DVI_WA0	O	Digital Voice interface (WA0 master output)	1.8V	
C8	DVI_RX	I	Digital Voice interface (RX)	1.8V	
D9	DVI_TX	O	Digital Voice interface (TX)	1.8V	
C10	DVI_CLK	O	Digital Voice interface (CLK master output)	1.8V	
Digital I/O					
F9	GPIO_01	I/O	GPIO_01	1.8V	I2C alternate
E10	GPIO_02	I/O	GPIO_02	1.8V	I2C alternate
F11	GPIO_03	I/O	GPIO_03	1.8V	I2C alternate
E12	GPIO_04	I/O	GPIO_04	1.8V	I2C alternate
F13	GPIO_05	I/O	GPIO_05	1.8V	I2C alternate
E14	GPIO_06	I/O	GPIO_06	1.8V	I2C alternate
R18	GPIO_07	I/O	GPIO_07	1.8V	I2C alternate
S19	GPIO_08	I/O	GPIO_08	1.8V	I2C alternate
U19	GPIO_09	I/O	GPIO_09	1.8V	I2C alternate
W19	GPIO_10	I/O	GPIO_10	1.8V	I2C alternate
RF Section					
AD1	Antenna	I/O	GSM/EDGE/UMTS/LTE Antenna (50 Ohm)	RF	
AU9	ANT_DIV	I	UMTS/LTE Antenna Diversity Input (50 Ohm)	RF	
GPS Section					
S1	ANT_GPS	I	GPS Antenna (50 Ohm)	RF	
V2	GPS_LNA_EN	O	Enable the external regulator for GPS LNA	1.8V	
Miscellaneous Function					
AP1	RESET#	I	Reset Input		Active Low
AS1	ON_OFF#	I	Input Command for Power ON		Active Low

Reproduction forbidden without written authorization from Titan Automotive Solutions NV. - All Rights Reserved.

PAD	Signal	I/O	Function	Type	COMMENT
AN12	SHDN_N	I	Unconditional Shut down Input		Active Low
P17	VAUX/PWRMON	O	Supply Output for External Accessories / Power ON Monitor	1.8V	
F17	VRTC	AI/ AO	VRTC Backup Capacitor	Power	To be used to back up the RTC section
D5	ADC_IN1	AI	Analog/Digital Converter Input 1	Analog	
E6	ADC_IN2	AI	Analog/Digital Converter Input 2	Analog	
F7	ADC_IN3	AI	Analog/Digital Converter Input 3	Analog	
AU3	STAT_LED	O	Status Indicator LED	1.8V	
AN10	SW_RDY	O	Indicates that the boot sequence completed successfully	1.8V	
Power Supply					
AP17	VBATT	-	Main Power Supply (Digital Section)	Power	
AP19	VBATT	-	Main Power Supply (Digital Section)	Power	
AR18	VBATT	-	Main Power Supply (Digital Section)	Power	
AS17	VBATT_PA	-	Main Power Supply (RF Transmit Power Section)	Power	
AS19	VBATT_PA	-	Main Power Supply (RF Transmit Power Section)	Power	
AT18	VBATT_PA	-	Main Power Supply (RF Transmit Power Section)	Power	
AU17	VBATT_PA	-	Main Power Supply (RF Transmit Power Section)	Power	
AU19	VBATT_PA	-	Main Power Supply (RF Transmit Power Section)	Power	
A6	GND	-	Ground		
A12	GND	-	Ground		
B13	GND	-	Ground		
B15	GND	-	Ground		
B17	GND	-	Ground		
C4	GND	-	Ground		
C6	GND	-	Ground		
D3	GND	-	Ground		
D7	GND	-	Ground		
E18	GND	-	Ground		
F1	GND	-	Ground		
G18	GND	-	Ground		
H19	GND	-	Ground		
M1	GND	-	Ground		
N2	GND	-	Ground		
P1	GND	-	Ground		
P3	GND	-	Ground		
R2	GND		Ground		
T2	GND		Ground		
T18	GND	-	Ground		
U1	GND	-	Ground		

Reproduction forbidden without written authorization from Titan Automotive Solutions NV. - All Rights Reserved.

PAD	Signal	I/O	Function	Type	COMMENT
V18	GND	-	Ground		
W1	GND	-	Ground		
X2	GND	-	Ground		
X18	GND	-	Ground		
Y1	GND	-	Ground		
Y19	GND		Ground		
AA2	GND	-	Ground		
AB1	GND	-	Ground		
AC2	GND	-	Ground		
AE2	GND	-	Ground		
AF1	GND	-	Ground		
AG2	GND	-	Ground		
AH1	GND	-	Ground		
AJ2	GND	-	Ground		
AK1	GND	-	Ground		
AK17	GND	-	Ground		
AL18	GND	-	Ground		
AM17	GND	-	Ground		
AM19	GND	-	Ground		
AN16	GND	-	Ground		
AN18	GND	-	Ground		
AP3	GND	-	Ground		
AP5	GND	-	Ground		
AP7	GND	-	Ground		
AP9	GND	-	Ground		
AP11	GND	-	Ground		
AP13	GND	-	Ground		
AP15	GND	-	Ground		
AR2	GND	-	Ground		
AR4	GND	-	Ground		
AR6	GND	-	Ground		
AR8	GND	-	Ground		
AR10	GND	-	Ground		
AR12	GND	-	Ground		
AR14	GND	-	Ground		
AR16	GND	-	Ground		
AS5	GND	-	Ground		
AS7	GND	-	Ground		
AS9	GND	-	Ground		
AS11	GND	-	Ground		
AS13	GND	-	Ground		

Reproduction forbidden without written authorization from Titan Automotive Solutions NV. - All Rights Reserved.

PAD	Signal	I/O	Function	Type	COMMENT
AS15	GND	-	Ground		
AT4	GND	-	Ground		
AT6	GND	-	Ground		
AT8	GND	-	Ground		
AT10	GND	-	Ground		
AT12	GND	-	Ground		
AT14	GND	-	Ground		
AT16	GND	-	Ground		
AU1	GND	-	Ground		
AU5	GND	-	Ground		
AU7	GND	-	Ground		
AU11	GND	-	Ground		
AU15	GND	-	Ground		
Reserved					
C12	Reserved	-	Reserved		
A14	Reserved	-	Reserved		
A16	Reserved	-	Reserved		
M17	Reserved	-	Reserved		
AN6	Reserved	-	Reserved		
C14	Reserved	-	Reserved		
D13	Reserved	-	Reserved		
C16	Reserved	-	Reserved		
D17	Reserved	-	Reserved		
E16	Reserved	-	Reserved		
C18	Reserved	-	Reserved		
D15	Reserved	-	Reserved		
F15	Reserved	-	Reserved		
E4	Reserved	-	Reserved		
F3	Reserved	-	Reserved		
F5	Reserved	-	Reserved		
G2	Reserved	-	Reserved		
H1	Reserved	-	Reserved		
H3	Reserved	-	Reserved		
H17	Reserved	-	Reserved		
J2	Reserved	-	Reserved		
J18	Reserved	-	Reserved		
K1	Reserved	-	Reserved		
K3	Reserved	-	Reserved		
K17	Reserved	-	Reserved		
L2	Reserved	-	Reserved		
L18	Reserved	-	Reserved		

Reproduction forbidden without written authorization from Titan Automotive Solutions NV. - All Rights Reserved.

PAD	Signal	I/O	Function	Type	COMMENT
M3	Reserved	-	Reserved		
S3	Reserved	-	Reserved		
S17	Reserved	-	Reserved		
U3	Reserved	-	Reserved		
W3	Reserved	-	Reserved		
AL2	Reserved	-	Reserved		
AM1	Reserved	-	Reserved		
AN2	Reserved	-	Reserved		
AN4	Reserved	-	Reserved		
AN8	Reserved	-	Reserved		
AN14	Reserved	-	Reserved		
AS3	Reserved	-	Reserved		
AT2	Reserved	-	Reserved		
B19	Reserved	-	Reserved		
AU13	Reserved	-	Reserved		
E2	Reserved	-	Reserved		
D1	Reserved	-	Reserved		
C2	Reserved	-	Reserved		
B1	Reserved	-	Reserved		

NOTE:

When the UART signals are used as the communication port between the Host and the Modem:

- DTR pin must be connected in order to enter LE920's power saving mode.
- RI pin must be connected in order to wake the host when a call is coming during sleep mode of host.
- RTS must be connected to GND (on the module side) if flow control is not used

In case UART port isn't used, all UART signals may be left disconnected

NOTE:

E8 port – eSIM Reset signal is available for LE920-NA AUTO S model only. For other models, E8 is internally disconnected.

NOTE:

Unless otherwise specified, RESERVED pins must be left unconnected (Floating).

Reproduction forbidden without written authorization from Titan Automotive Solutions NV. - All Rights Reserved.

The table below specifies the LE920A4 signals that must be connected even if not used by end application:

PAD	Signal	Notes
AP17,AP19,AR18,AS17,AS19,AT18,AU17,AU19	VBATT & VBATT_PA	
A6,A12,B13,B15,B17,C4,C6,D3,D7,E18,F1,G18,H19, M1,N2,P1,P3,R2,T2,T18,U1,V18,W1,X2,X18,Y1,Y19, AA2,AB1,AC2,AE2,AF1,AG2,AH1,AJ2,AK1,AK17, AL18,AM17,AM19,AN16,AN18,AP3,AP5,AP7,AP9, AP11,AP13,AP15,AR2,AR4AR6,AR8,AR10,AR12, AR14,AR16,AS5,AS7,AS9,AS11,AS13,AS15,AT4, AT6,AT8,AT10,AT12,AT14,AT16,AU1,AU5,AU7, AU11,AU15	GND	
AS1	ON/OFF*	
AN12	SHDN_N	
D19	USB_D+	If not used should be connected to a Test Point or an USB connector
F19	USB_D-	If not used should be connected to a Test Point or an USB connector
A18	USB_VBUS	If not used should be connected to a Test Point or an USB connector
AH19	C103/TXD	If not used should be connected to a Test Point
AF19	C104/RXD	If not used should be connected to a Test Point
AA18	C105/RTS	If the flow control is not used it should be connected to GND
AK19	C106/CTS	If not used should be connected to a Test Point
AB19	TXD_AUX	If not used should be connected to a Test Point
AD19	RXD_AUX	If not used should be connected to a Test Point
AD1	Antenna	
AU9	ANT_DIV	
S1	ANT_GPS	
G2, J2, L2, F3, H3, K3, E4, AN14	Reserved	If not used should be connected to a Test Point

Reproduction forbidden without written authorization from Titan Automotive Solutions NV. - All Rights Reserved.

3.1.1. LGA Pads Layout

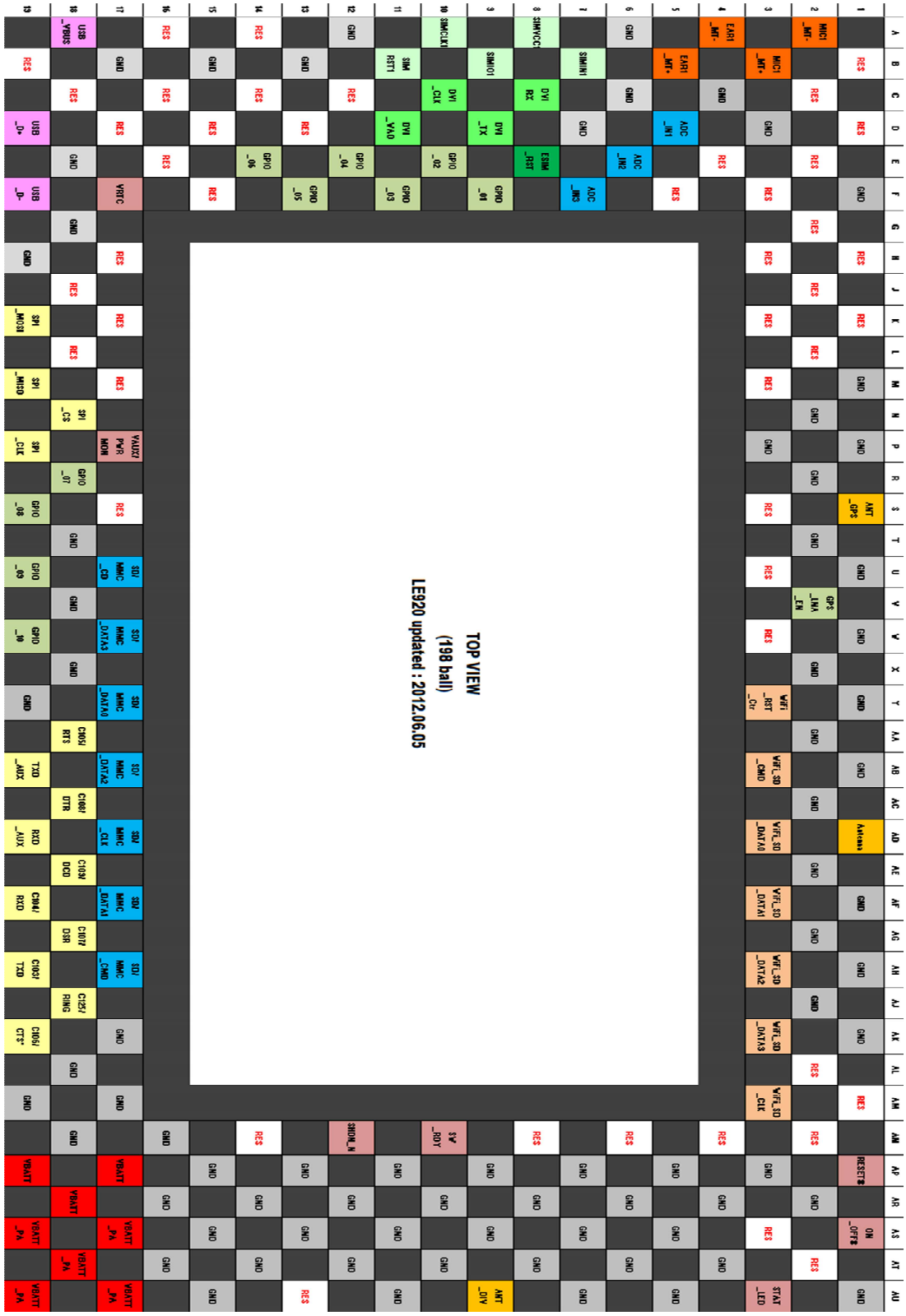

Reproduction forbidden without written authorization from Titan Automotive Solutions NV. - All Rights Reserved.

4. Hardware Commands

4.1. Turning ON the LE920

To turn on LE920, the pad ON# must be tied low for at least 1 second and then released.

The maximum current that can be drained from the ON# pad is 0.1 mA.

A simple circuit to power on the module is illustrated below:

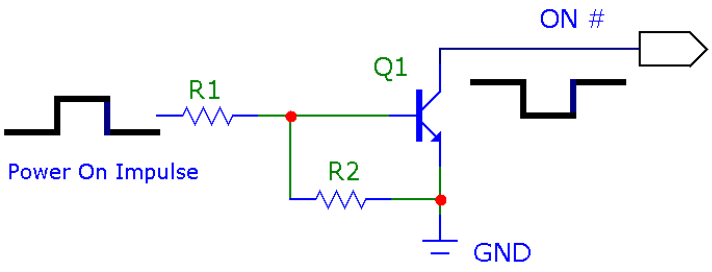

4.2. Initialization and Activation state

Upon turning on LE920 module, The LE920 is not activated yet because the boot sequence of LE920 is still going on internally. It takes about 10 seconds to complete the initializing the module internally.

For this reason, it would be useless to try to access LE920 during the Initialization state, as shown below. To reach full stability, The LE920 needs at least 15 seconds after the PWRMON goes High to become operational by reaching the activation state.

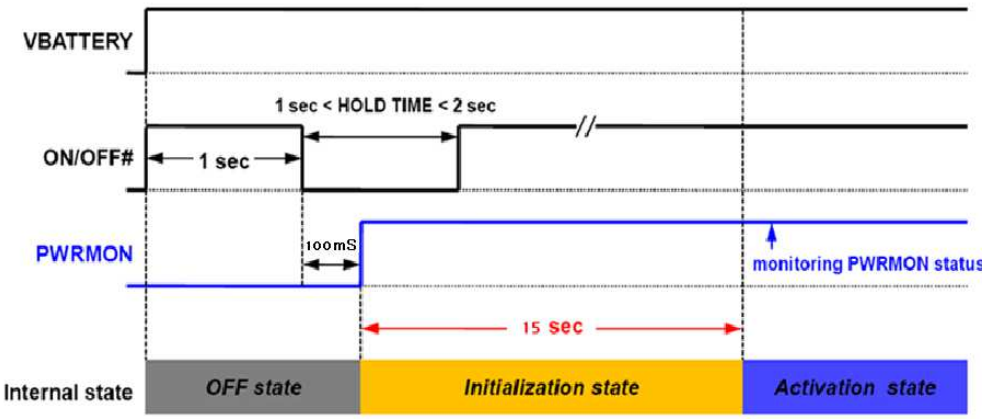

During the *Initialization state*, any kind of AT-command is not available. DTE must wait for the *Activation state* before communicating with LE920.

Reproduction forbidden without written authorization from Titan Automotive Solutions NV. - All Rights Reserved.

NOTE:

To check if the LE920 has powered on, the hardware line PWRMON must be monitored. When PWRMON goes high, the module has powered on.

NOTE:

Do not use any pull up resistor on the ON# line, it is internally pulled up. Using pull up resistor may cause latch-up problems on the LE920 power regulator and improper powering on/off of the module. The line ON# must be connected only in an open collector configuration.

NOTE:

In this document all the lines are inverted. Active low signals are labeled with a name that ends with "#" or with a bar over the name.

NOTE:

In order to avoid a back-powering effect it is recommended to avoid having any HIGH logic level signal applied to the digital pins of the module when it is powered OFF or during an ON/OFF transition.

4.3. Turning OFF the LE920

Turning off the device can be done in four different ways:

- by Software command AT#SHDN
- by Hardware Shutdown using pad ON/OFF#
- by Hardware Unconditional Reset using the RESET#
- by Hardware Unconditional Shutdown using the SHDN#

When the device is shut down by software command or by hardware shutdown, it issues to the network a detach request that informs the network that the device will not be reachable any more.

TIP:

To check if the device has powered off, hardware line PWRMON must be monitored. When PWRMON goes low it can be considered the device has powered off.

NOTE:

In order to avoid a back-powering effect it is recommended to avoid having any HIGH logic level signal applied to the digital pins of the module when it is powered OFF or during an ON/OFF transition.

Reproduction forbidden without written authorization from Titan Automotive Solutions NV. - All Rights Reserved.

4.3.1. Shutdown by Software Command

LE920 can be shut down by a software command.

When a shutdown command is sent, LE920 goes into the finalization state and finally will shut down PWRMON at the end of this state.

The duration of the finalization state can differ according to the situation in which the LE920 is, so a value cannot be defined.

Normally it will be more than15 seconds after sending a shutdown command, DTE should monitor the status of PWRMON to observe the actual power off.

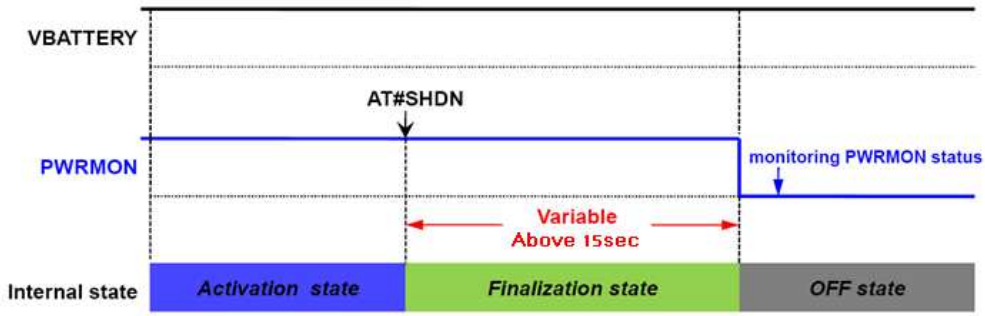

TIP:

To check if the device has powered off, hardware line PWRMON must be monitored. When PWRMON goes low, the device has powered off.

Reproduction forbidden without written authorization from Titan Automotive Solutions NV. - All Rights Reserved.

4.3.2. Hardware Shutdown

To turn OFF LE920 the pad ON/OFF# must be tied low for at least 2 seconds and then released. The same circuitry and timing for the power on must be used.

When the hold time of ON/OFF# is above 2.5 seconds, LE920 goes into the finalization state and finally will shut down PWRMON at the end of this state.

The period of the finalization state can differ according to the situation in which the LE920 is, so it cannot be fixed definitely.

. Normally it will be more than15 seconds after sending a shutdown command ; DTE should monitor the status of PWRMON to see observe the actual power off.

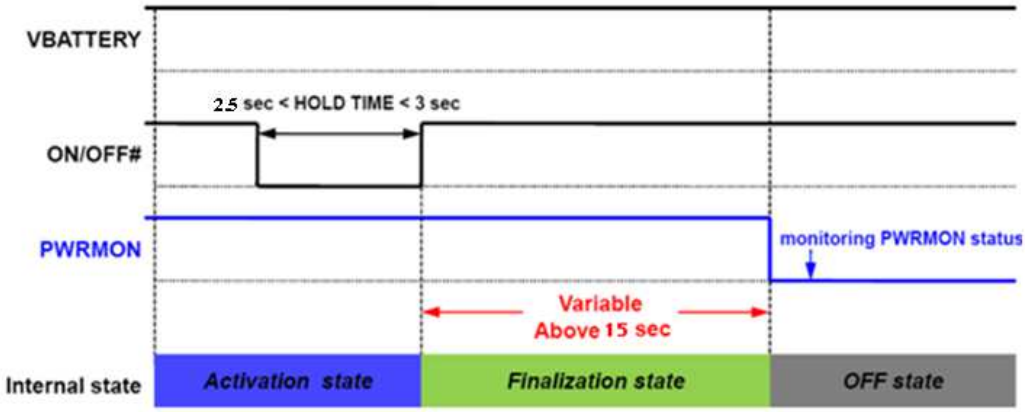

TIP:

To check if the device has powered off, hardware line PWRMON must be monitored. When PWRMON goes low, the device has powered off.

Reproduction forbidden without written authorization from Titan Automotive Solutions NV. - All Rights Reserved.

4.3.3. Hardware Unconditional Restart (RESET)

To unconditionally restart LE920, the pad RESET# must be tied low for period between 500 - 2000 milliseconds and then released.

A simple circuit to do it is:

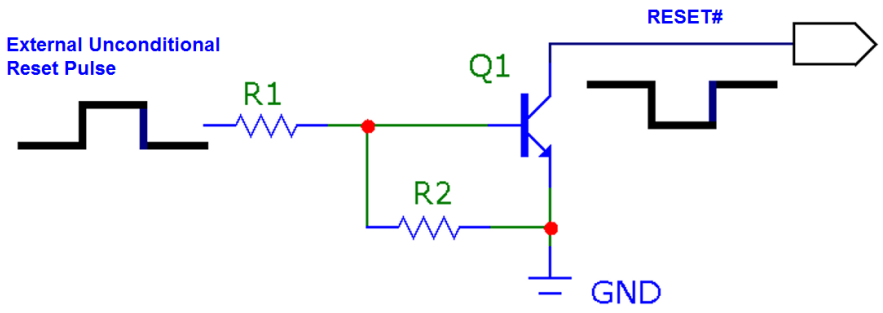

NOTE:

Do not use any pull up resistor on the RESET# line or any totem pole digital output. Using pull up resistor may cause latch-up problems on the LE920 power regulator and improper functioning of the module. The line RESET# must be connected only in open collector configuration.

NOTE:

Asserting tRESET low for period greater than 2000 milliseconds will cause the module to shut down.

TIP:

The unconditional hardware Restart must always be implemented on the boards and the software must use it only as an emergency exit procedure, and **not** as a normal power-off operation

Reproduction forbidden without written authorization from Titan Automotive Solutions NV. - All Rights Reserved.

4.3.4. Hardware Unconditional Shutdown

To unconditionally Shutdown LE920, the pad SHDN_N must be tied low for at least 200 milliseconds and then released.

A simple circuit to do it is:

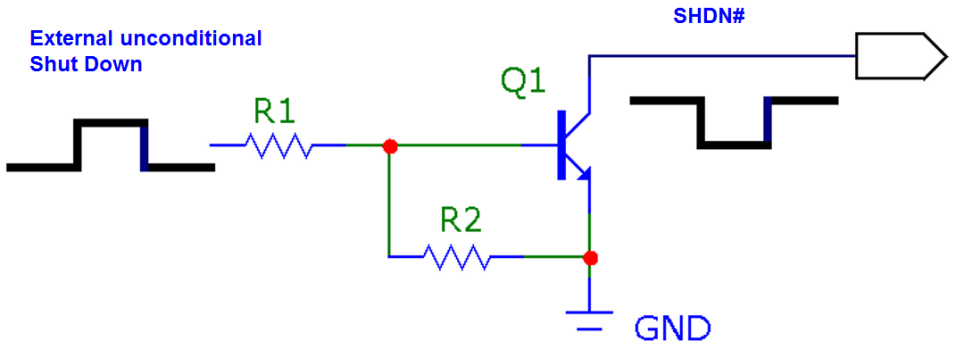

NOTE:

Do not use any pull up resistor on the SHDN_N line or any totem pole digital output. Using pull up resistor may cause latch-up problems on the LE920 power regulator and improper functioning of the module. The line SHDN_N must be connected only in open collector configuration.

NOTE:

The unconditional hardware SHDN_N must always be implemented on the boards. The software must use it as an **emergency exit** procedure only, and **not** as a normal power-off operation.

WARNING:

Please carefully follow the recommended procedure for shut down and power off.
Not following the recommended shut-down and power off procedures might damage the device and consequently void the warranty.

Reproduction forbidden without written authorization from Titan Automotive Solutions NV. - All Rights Reserved.

4.4. Summary of Turning ON and OFF the module

The chart below describes the overall sequences for Turning ON and OFF.

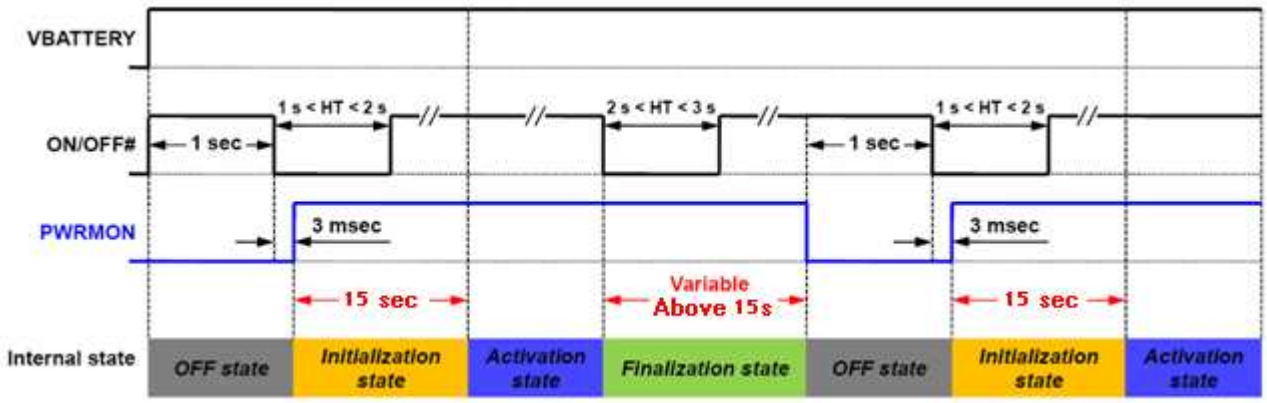

Reproduction forbidden without written authorization from Titan Automotive Solutions NV. - All Rights Reserved.

5. Power Supply

The power supply circuitry and board layout are a very important part in the full product design and they strongly reflect on the overall product performance. Reading carefully the requirements and the guidelines that follow will ensure a good and proper design.

5.1. Power Supply Requirements

The LE920 power requirements are:

Power Supply	
Nominal Supply Voltage	3.8V
Max Supply Voltage	4.2V
Supply Voltage Range	3.3V– 4.2V

LE920 current consumption			
Mode		Average(mA)	Mode Description
SWITCHED OFF			Module supplied but switched Off
Switched Off		40 uA	
IDLE mode			Standby mode; no call in progress
AT+CFUN=1	WCDMA	16	Normal mode; full functionality of the module
	GSM	19	
	LTE	20	
AT+CFUN=4		10	Disabled TX and RX; modules is not registered on the network
AT+CFUN=5	GSM	4.4	DRx2
		3.3	DRx3
		2.8	DRx4
		2.5	DRx5
		2.3	DRx6
		2.1	DRx7
		2.0	DRx8
		1.9	DRx9
	WCDMA	3.0	DRx6
		2.2	DRx7
		1.8	DRx8
		1.4	DRx9
	LTE	6.3	Paging cycle #32 frames (0.32 sec DRx cycle)
		3.8	Paging cycle #64 frames (0.64 sec DRx cycle)

Reproduction forbidden without written authorization from Titan Automotive Solutions NV. - All Rights Reserved.

		2.5	Paging cycle #128 frames (1.28 sec DRx cycle)
		1.9	Paging cycle #256 frames (2.56 sec DRx cycle)
Operative mode (LTE)			
LTE (0dBm)		203	LTE data call channel BW 5MHz,RB=1, TX = 0dBm)
LTE (22dBm)		540	LTE data call (channel BW 5MHz,RB=1, TX = 22dBm)
Operative mode (WCDMA)			
WCDMA Voice		185	WCDMA voice call (TX = 10dBm)
WCDMA HSDPA (0dBm)		170	WCDMA data call (Cat 14, TX = 0dBm, Max Throughput)
WCDMA HSDPA (22dBm)		470	WCDMA data call (Cat 14, TX = 22dBm, Max Throughput)
Operative mode (GSM)			
GSM TX and RX mode			
GSM900 PL5		290	GSM Voice Call
DCS1800 PL0		170	
GPRS 1TX + 4RX			
GSM900 PL5		410	GPRS Sending data mode
DCS1800 PL0		320	
EDGE 1TX + 4RX			
GSM900 PL5		255	EDGE Sending data mode
DCS1800 PL0		240	

* Worst/best case depends on network configuration and is not under module control.

TIP:

The electrical design for the Power supply must be made ensuring that it will be capable of a peak current output of at least 2A.

NOTE:

In GSM/GPRS mode, RF transmission is not continuous and is packed into bursts at a base frequency of about 216 Hz with relative current peaks as high as about 2A. Therefore the power supply must be designed to withstand these current peaks without big voltage drops; this means that both the electrical design and the board layout must be designed for this current flow. If the layout of the PCB is not well designed, a strong noise floor is generated on the ground. This will reflect on all the audio paths producing an audible annoying noise at 216 Hz; if the voltage drops during the peaks, current absorption is too high. The device may even shut down as a consequence of the supply voltage drop.

Reproduction forbidden without written authorization from Titan Automotive Solutions NV. - All Rights Reserved.

5.2. General Design Rules

The principal guidelines for the Power Supply Design embrace three different design steps:

- the electrical design
- the thermal design
- the PCB layout

5.2.1. Electrical Design Guidelines

The electrical design of the power supply depends strongly on the power source where this power is drained. We will distinguish them into three categories:

- +5V input (typically PC internal regulator output)
- +12V input (typically automotive)
- battery

5.2.1.1. + 5V Input Source Power Supply Design Guidelines

- The desired output for the power supply is 3.8V, hence there is not a big difference between the input source and the desired output and a linear regulator can be used. A switching power supply will not be suitable because of the low drop-out requirements.
- When using a linear regulator, a proper heat sink must be provided in order to dissipate the power generated.
- A Bypass low ESR capacitor of adequate capacity must be provided in order to cut the current absorption peaks close to LE920, a 100µF tantalum capacitor is usually suitable (on both VBATT and VBATT_PA together)..
- Make sure the low ESR capacitor on the power supply output (usually a tantalum one) is rated at least 10V.
- A protection diode must be inserted close to the power input, in order to protect LE920 from power polarity inversion.

Reproduction forbidden without written authorization from Titan Automotive Solutions NV. - All Rights Reserved.

An example of linear regulator with 5V input is:

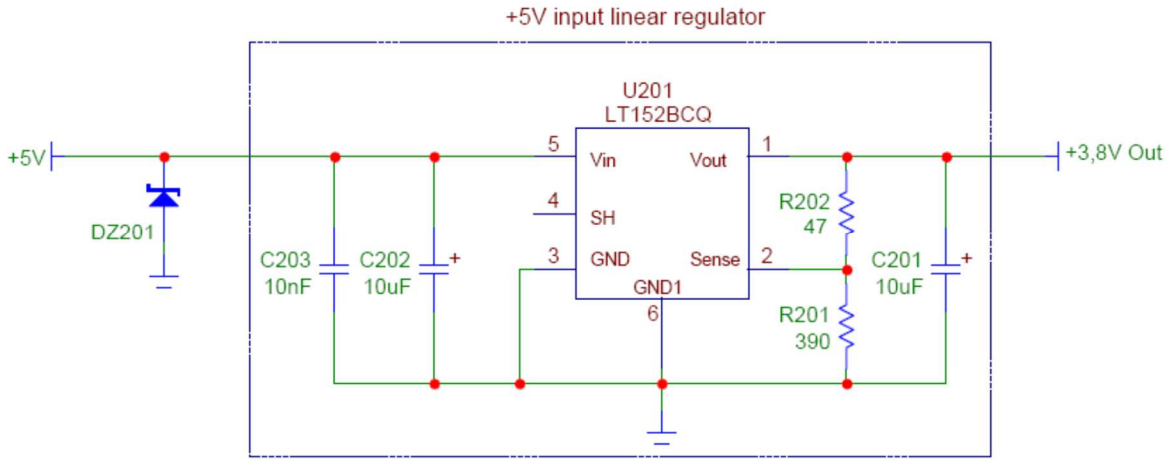

5.2.1.2. + 12V Input Source Power Supply Design Guidelines

- The desired output for the power supply is 3.8V, hence due to the big difference between the input source and the desired output, a linear regulator is unsuitable and must not be used. A switching power supply will be preferable because of its better efficiency especially with the 2A peak current load represented by LE920.
- When using a switching regulator, a 500 kHz or more switching frequency regulator is preferable because of its smaller inductor size and its faster transient response. This allows the regulator to respond quickly to the current peaks absorption.
- In any case, the frequency and switching design selection is related to the application to be developed due to the fact the switching frequency could also generate EMC interference.
- For car batteries (lead-acid accumulators) the input voltage can rise up to 15.8V and this must be kept in mind when choosing components: all components in the power supply must withstand this voltage.
- A bypass low ESR capacitor of adequate capacity must be provided in order to cut the current absorption peaks. A 100µF tantalum capacitor is usually suitable (on both VBATT and VBATT_PA together).
- Make sure the low ESR capacitor on the power supply output (usually a tantalum one) is rated at least 10V.
- For automotive applications a spike protection diode must be inserted close to the power input, in order to clean the supply of spikes.
- A protection diode must be inserted close to the power input, in order to protect LE920 from power polarity inversion. This can be the same diode as for spike protection.

Reproduction forbidden without written authorization from Titan Automotive Solutions NV. - All Rights Reserved.

An example of switching regulator with 12V input is in the below schematic (it is split in 2 parts):

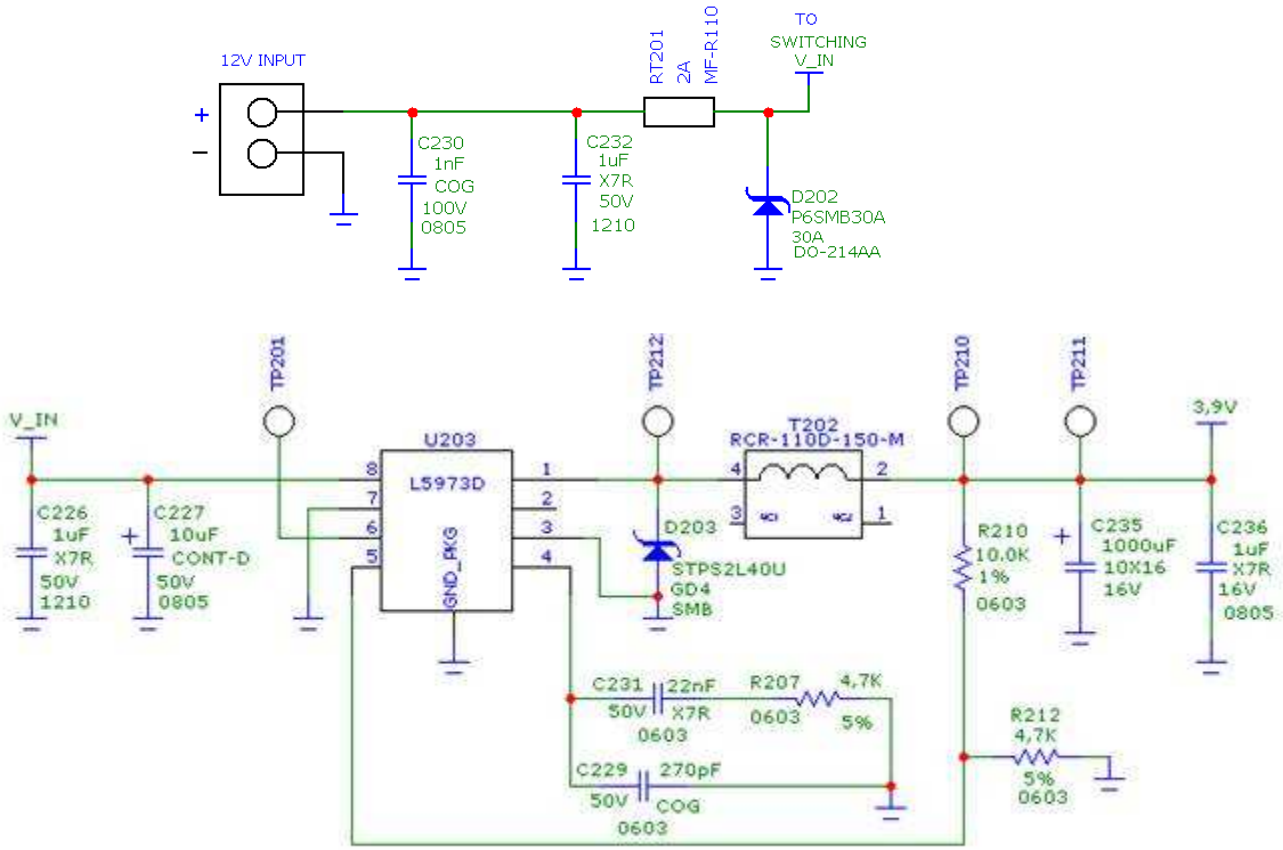

Switching regulator

Reproduction forbidden without written authorization from Titan Automotive Solutions NV. - All Rights Reserved.

5.2.1.3. Battery Source Power Supply Design Guidelines

- The desired nominal output for the power supply is 3.8V and the maximum allowed voltage is 4.2V, hence a single 3.7V Li-Ion cell battery type is suited for supplying the power to the Titan LE920 module.

NOTE:

Do not use any Ni-Cd, Ni-MH, and Pb battery types directly connected with LE920. Their use can lead to overvoltage on LE920 and damage it. Use only Li-Ion battery types.

- A bypass low ESR capacitor of adequate capacity must be provided in order to cut the current absorption peaks; a 100µF tantalum capacitor is usually suitable (on both VBATT and VBATT_PA together).
- Make sure the low ESR capacitor (usually a tantalum one) is rated at least 10V.
- A protection diode must be inserted close to the power input, in order to protect LE920 from power polarity inversion. Otherwise the battery connector must be done in a way to avoid polarity inversions when connecting the battery.
- The battery capacity must be at least 900mAh in order to withstand the current peaks of 2A.

Reproduction forbidden without written authorization from Titan Automotive Solutions NV. - All Rights Reserved.

5.2.2. Thermal Design Guidelines

The thermal design for the power supply heat sink must be done with the following specifications:

- Average current consumption during HSPA transmission @PWR level max in LE920: 640mA (TBD)
- Average current consumption during class12 GPRS transmission @PWR level max: 680mA (TBD)
- Average GPS current during GPS ON (Power Saving disabled) : 65mA (TBD)

NOTE:

The average consumption during transmissions depends on the power level at which the device is requested to transmit via the network. The average current consumption hence varies significantly.

NOTE:

The thermal design for the Power supply must be made keeping an average consumption at the max transmitting level during calls of 640mA(HSPA)/680mA(GPRS) rms plus 65mA rms for GPS in tracking mode.

Considering the very low current during idle, especially if Power Saving function is enabled, it is possible to consider from the thermal point of view that the device absorbs significant current only during calls.

If we assume that the device stays in transmission for short periods of time (let us say few minutes) and then remains for quite a long time in idle (let us say one hour), then the power supply always has time to cool down between calls and the heat sink could be smaller than the calculated for 640mA (HSPA)/680mA (GPRS) maximum RMS current. There could even be a simple chip package (no heat sink).

Moreover in average network conditions the device is requested to transmit at a lower power level than the maximum and hence the current consumption will be less than 640mA (HSPA) /680mA (GPRS) (being usually around 250mA).

For these reasons the thermal design is rarely a concern and the simple ground plane where the power supply chip is placed can be enough to ensure a good thermal condition and avoid overheating.

For the heat generated by the LE920, you can consider it to be during transmission 2W max during class12 GPRS upload. This generated heat will be mostly conducted to the ground plane under the LE920; you must ensure that your application can dissipate heat.

In the WCDMA/HSPA mode, since LE920 emits RF signals continuously during transmission, you must pay special attention how to dissipate the heat generated.

The current consumption will be up to about 640mA in HSPA (630mA in WCDMA) continuously at the maximum TX output power (23dBm). Thus you must arrange on the PCB used to mount LE920, that the area under LE920 is as large as possible. You must mount LE920 on the large ground area of your application board and make many ground vias to dissipate the heat.

Reproduction forbidden without written authorization from Titan Automotive Solutions NV. - All Rights Reserved.

Even though peak current consumption in GSM mode is higher than in WCDMA, consideration for the heat sink is more important in the case of WCDMA.

As mentioned before, a GSM signal is bursty, thus, the temperature drift is more insensitive than WCDMA. Consequently, if you successfully manage heat dissipation in WCDMA mode, you don't need to think more about GSM mode.

5.2.3. Power Supply PCB Layout Guidelines

As seen in the electrical design guidelines, the power supply must have a low ESR capacitor on the output to cut the current peaks and a protection diode on the input to protect the supply from spikes and polarity inversion. The placement of these components is crucial for the correct working of the circuitry. A misplaced component can be useless or can even decrease the power supply performances.

- The bypass low ESR capacitor must be placed close to the Titan LE920 power input pads, or in the case the power supply is a switching type, it can be placed close to the inductor to cut the ripple as long as the PCB trace from the capacitor to LE920 is wide enough to ensure a drop-less connection even during the 2A current peaks.
- The protection diode must be placed close to the input connector where the power source is drained.
- The PCB traces from the input connector to the power regulator IC must be wide enough to ensure no voltage drops occur during the 2A current peaks. Note that this is not done to save power loss but especially to avoid the voltage drops on the power line at the current peaks frequency of 216 Hz that will reflect on all the components connected to that supply (also introducing the noise floor at the burst base frequency.) For this reason while a voltage drop of 300-400 mV may be acceptable from the power loss point of view, the same voltage drop may not be acceptable from the noise point of view. If your application does not have audio interface but only uses the data feature of the Titan LE920, then this noise is not so disturbing and power supply layout design can be more forgiving.
- The PCB traces to LE920 and the bypass capacitor must be wide enough to ensure no significant voltage drops occur when the 2A current peaks are absorbed. This is needed for the same above-mentioned reasons. Try to keep this trace as short as possible.
- The PCB traces connecting the switching output to the inductor and the switching diode must be kept as short as possible by placing the inductor and the diode very close to the power switching IC (only for switching power supply). This is done in order to reduce the radiated field (noise) at the switching frequency (usually 100-500 kHz).
- The use of a good common ground plane is suggested.
- The placement of the power supply on the board must be done in a way to guarantee that the high current return paths in the ground plane are not overlapping any noise sensitive circuitry such as the microphone amplifier/buffer or earphone amplifier.

Reproduction forbidden without written authorization from Titan Automotive Solutions NV. - All Rights Reserved.

- The power supply input cables must be kept separate from noise sensitive lines such as microphone/earphone cables.

Reproduction forbidden without written authorization from Titan Automotive Solutions NV. - All Rights Reserved.

6. Antenna(s)

The antenna connection and board layout design are the most important parts in the full product design and they strongly reflect on the product's overall performance. Read carefully and follow the requirements and the guidelines for a good and proper design.

6.1. GSM/WCDMA/LTE Antenna Requirements

The antenna for a Titan LE920 device must fulfill the following requirements:

GSM / WCDMA/ LTE Antenna Requirements			
Frequency range	Depending on frequency band(s) provided by the network operator, the customer must use the most suitable antenna that/those band(s)		
Bandwidth	**LE920-EU**	**LE920-NAG**	**LE920-NA**
	GSM850 : 70 MHz GSM900 : 80 MHz GSM1800(DCS) : 170 MHz GSM1900(PCS) : 140 MHz WCDMA band I(2100) : 250 MHz WCDMA band III(1800) : 170 MHz WCDMA band VIII(900) : 80 MHz LTE Band I(2100) : 250 MHz LTE band III(1800) : 170 MHz LTE Band VII(2600) : 190 MHz LTE Band VIII(900) : 80 MHz LTE Band XX(800) : 71 MHz	GSM850 : 70 MHz GSM900 : 80 MHz GSM1800(DCS) : 170 MHz GSM1900(PCS) : 140 MHz WCDMA band I(2100) : 250 MHz WCDMA band II(1900) : 140 MHz WCDMA band IV(1700) : 445 MHz WCDMA band V(850) : 70 MHz WDCMA band VI(800): 70MHz LTE Band I(2100) : 250 MHz LTE Band II(1900) : 140 MHz LTE Band IV(1700) : 445 MHz LTE Band V (850) : 70 MHz LTE Band XVII(700) : 42 MHz	GSM850 : 70 MHz GSM1900(PCS) : 140 MHz WCDMA band II(1900) : 140 MHz WCDMA band IV(1700) : 445 MHz WCDMA band V(850) : 70 MHz LTE Band II(1900) : 140 MHz LTE Band IV(1700) : 445 MHz LTE Band V (850) : 70 MHz LTE Band VII(2600) : 190 MHz LTE Band XVII(700) : 42 MHz LTE Band XII(700) : 42 MHz
Gain	Gain < 3dBi		
Impedance	50 Ohm		
Input power	> 33dBm(2 W) peak power in GSM > 24dBm Average power in WCDMA & LTE		
VSWR absolute max	<= 10:1		
VSWR recommended	<= 2:1		

When using the Titan LE920, since there's no antenna connector on the module, the antenna must be connected to the LE920 antenna pad (AD1) by means of a transmission line implemented on the PCB.

In the case that the antenna is not directly connected to the antenna pad of the LE920, then a PCB line is required in order to connect with it or with its connector.

Reproduction forbidden without written authorization from Titan Automotive Solutions NV. - All Rights Reserved.

This transmission line shall fulfill the following requirements:

Antenna Line on PCB Requirements	
Characteristic Impedance	50Ohm
Max Attenuation	0.3dB
Coupling with other signals shall be avoided	
Cold End (Ground Plane) of antenna shall be equipotential to the LE920 ground pads	

Furthermore if the device is developed for the US and/or Canada market, it must comply with the FCC and/or IC approval requirements:

This device is to be used only for mobile and fixed application. The antenna(s) used for this transmitter must be installed to provide a separation distance of at least 20 cm from all persons and must not be co-located or operating in conjunction with any other antenna or transmitter. End-Users must be provided with transmitter operation conditions for satisfying RF exposure compliance. OEM integrators must ensure that the end user has no manual instructions to remove or install the LE920 module. Antennas used for this OEM module must not exceed 3dBi gain for mobile and fixed operating configurations.

6.2. GSM/WCDMA/LTE Antenna – PCB line Guidelines

- Make sure that the transmission line's characteristic impedance is 50ohm.
- Keep the line on the PCB as short as possible since the antenna line loss should be less than around 0.3dB.
- Line geometry should have uniform characteristics, constant cross section, avoid meanders and abrupt curves.
- Any suitable geometry/structure can be used for implementing the printed transmission line affecting the antenna.
- If a Ground plane is required in the line geometry, that plane must be continuous and sufficiently extended so the geometry can be as similar as possible to the related canonical model.
- Keep, if possible, at least one layer of the PCB used only for the Ground plane; if possible, use this layer as reference Ground plane for the transmission line.
- It is wise to surround (on both sides) the PCB transmission line with Ground. Avoid having other signal tracks facing directly the antenna line track.
- Avoid crossing any un-shielded transmission line footprint with other tracks on different layers.
- The Ground surrounding the antenna line on the PCB must be strictly connected to the main Ground plane by means of via-holes (once per 2mm at least) placed close to the ground edges facing the line track.
- Place EM-noisy devices as far as possible from LE920 antenna line.
- Keep the antenna line far away from the LE920 power supply lines.
- If EM-noisy devices are present on the PCB hosting the LE920, such as fast switching ICs, take care to shield them with a metal frame cover.
- If EM-noisy devices are not present around the line, using geometries like Micro strip or Grounded Coplanar Waveguide is preferred since they typically ensure less attenuation

Reproduction forbidden without written authorization from Titan Automotive Solutions NV. - All Rights Reserved.

compared to a Strip line having the same length.

6.3. GSM/WCDMA/LTE Antenna – Installation Guidelines

- Install the antenna in a location with access to the network radio signal.
- The antenna must be installed such that it provides a separation distance of at least 20 cm from all persons and must not be co-located or operating in conjunction with any other antenna or transmitter;
- The antenna must not be installed inside metal cases;
- The antenna must also be installed according to the antenna manufacturer's instructions.

6.4. Antenna Diversity Requirements

This product includes an input for a second RX antenna to improve the radio sensitivity. The function is called Antenna Diversity.

ANTENNA REQUIREMENTS		
Frequency range	Depending on frequency band(s) provided by the network operator, the customer shall use the most suitable antenna for that/those band(s)	
Bandwidth	**LE920-EU**	**LE920-NA**
	WCDMA band I(2100) : 250 MHz WCDMA band III(1800) : 170 MHz WCDMA band VIII(900) : 80 MHz LTE Band I(2100) : 250 MHz LTE band III(1800) : 170 MHz LTE Band VII(2600) : 190 MHz LTE Band VIII(900) : 80 MHz LTE Band XX(800) : 71 MHz	WCDMA band I(2100) : 250 MHz WCDMA band II(1900) : 140 MHz WCDMA band IV(AWS) : 445 MHz WCDMA band IV(850) : 445 MHz WCDMA band V(850) : 70 MHz WDCMA band VI(800): 55MHz LTE Band I(2100) : 250 MHz LTE Band II(1900) : 140 MHz LTE Band IV(1700) : 445 MHz LTE Band V (850) : 70 MHz Band XVII(700) : 42 MHz Band XII(700) : 42 MHz
Impedance	50Ω	
VSWR recommended	≤ 2:1	

When using the Titan LE920, since there's no antenna connector on the module, the antenna must be connected to the LE920 antenna pad (AU9) by means of a transmission line implemented on the PCB.

Reproduction forbidden without written authorization from Titan Automotive Solutions NV. - All Rights Reserved.

In the case that the antenna is not directly connected at the antenna pad of the LE920, then a PCB line is required in order to connect with it or with its connector.

The second Rx antenna should not be located in the close vicinity of the main antenna. In order to improve Diversity Gain, Isolation and reduce mutual interaction, the two antennas should be located at the maximum reciprocal distance possible, taking into consideration the available space within the application.

NOTE:

If the RX Diversity is not used/connected, disable the Diversity functionality using the AT#RXDIV command (refer to the AT User guide) and leave the Diversity pad AU9 unconnected.

6.5. GPS/GNSS Antenna Requirements

LE920 supports an active antenna.

It is recommended to use antennas as follow:

- An external active antenna (GPS only).
- An external active antenna, GNSS pre-filter.

NOTE:

Released models LE920-NA cs1550f-A & LE920-EU cs1550f-B include internal LNA (13.5dB gain typ.).

For LE920-NA cs1550f-A & LE920-EU cs1550f-B models it is recommended to use:

• An external passive antenna (GPS only).

• An external passive antenna, GNSS pre-filter.

NOTE:

The external GNSS pre-Filter shall be required for GLONASS application.

GNSS pre-Filter requirement shall fulfill the following requirements.

- Source and Load Impedance = 50Ohm
- Insertion Loss (1575.42 – 1576.42MHz) = 1.4dB (Max)
- Insertion Loss (1565.42 – 1585.42MHz) = 2.0dB (Max)
- Insertion Loss (1597.5515 – 1605.886MHZ) = 2.0dB (Max)

Reproduction forbidden without written authorization from Titan Automotive Solutions NV. - All Rights Reserved.

NOTE:

It is recommended to add a DC block to the customer's GPS application in order to prevent damage to the LE920 due to unwanted DC voltage

WARNING:

The LE920 software is implemented differently depending on the configurations of an external device. Please refer to the AT command User Guide in detail.

6.5.1. Combined GPS/GNSS Antenna

The use of combined RF/GPS/GNSS antenna is NOT recommended. This solution could generate extremely poor GPS/GNSS reception. In addition, the combination of antennas requires an additional diplexer, which adds significant power losses in the RF path.

6.5.2. Linear and Patch GPS/GNSS Antenna

Using this type of antenna introduces at least 3dB of loss compared to a circularly polarized (CP) antenna. Having a spherical gain response instead of a hemispherical gain response could aggravate the multipath behaviour & create poor position accuracy.

6.5.3. Front End Design Considerations

When using the Titan LE920, since there's no antenna connector on the module, the antenna must be connected to the LE920 through the PCB to the antenna pad.

In the case that the antenna is not directly connected at the antenna pad of the LE920, then a PCB line is required.

This line of transmission shall fulfill the following requirements:

Antenna Line on PCB Requirements	
Characteristic Impedance	50Ohm
Max Attenuation	0.3dB
Coupling with other signals shall be avoided	
Cold End (Ground Plane) of antenna shall be equipotential to the LE920 ground pads	

Reproduction forbidden without written authorization from Titan Automotive Solutions NV. - All Rights Reserved.

Furthermore if the device is developed for the US and/or Canada market, it must comply with the FCC and/or IC requirements.

This device is to be used only for mobile and fixed application.

6.5.4. GPS/GNSS Antenna - PCB Line Guidelines

- Ensure that the antenna line impedance is 50ohm.
- Keep the line on the PCB as short as possible to reduce the loss.
- The antenna line must have uniform characteristics, constant cross section, avoiding meanders and abrupt curves.
- Keep one layer of the PCB used only for the Ground plane; if possible.
- Surround (on the sides, over and under) the antenna line on the PCB with Ground. Avoid having other signal tracks directly facing the antenna line track.
- The Ground around the antenna line on the PCB must be strictly connected to the main Ground plane by placing vias at least once per 2mm.
- Place EM-noisy devices as far as possible from LE920 antenna line.
- Keep the antenna line far away from the LE920 power supply lines.
- If EM-noisy devices are around the PCB hosting the LE920, such as fast switching ICs, ensure shielding the antenna line by burying it inside the layers of PCB and surrounding it with Ground planes; or shield it with a metal frame cover.
- If you do not have EM-noisy devices around the PCB of LE920, use a Micro strip line on the surface copper layer for the antenna line. The line attenuation will be lower than a buried one.

6.5.5. GPS/GNSS Antenna – Installation Guidelines

- The LE920, due to its sensitivity characteristics, is capable of performing a fix inside buildings. (In any case the sensitivity could be affected by the building characteristics i.e. shielding)
- The antenna must not be co-located or operating in conjunction with any other antenna or transmitter.
- The antenna shall not be installed inside metal cases.
- The antenna shall also be installed according to the antenna manufacturer's instructions.

Reproduction forbidden without written authorization from Titan Automotive Solutions NV. - All Rights Reserved.

7. Logic Level Specifications

Where not specifically stated, all the interface circuits work at 1.8V CMOS logic levels.

The following table shows the logic level specifications used in the Titan LE920 interface circuits:

NOTE:

Do not connect LE920's digital logic signal directly to OEM's digital logic signal with a level higher than 2.7V for 1.8V CMOS signals.

For 1.8V CMOS signals:

Absolute Maximum Ratings - Not Functional

Parameter	LE920	
	Min	Max
Input level on any digital pin when on	-0.3V	+2.16V
Input voltage on analog pins when on	-0.3V	+2.16 V

Operating Range - Interface levels (1.8V CMOS)

Level	LE920	
	Min	Max
Input high level	1.5V	2.1V
Input low level	-0.3V	0.5V
Output high level	1.35V	1.8V
Output low level	0V	0.45V

Reproduction forbidden without written authorization from Titan Automotive Solutions NV. - All Rights Reserved.

8. USB Port

The LE920 module includes a Universal Serial Bus (USB) transceiver, which operates at USB high-speed (480Mbits/sec). It can also work with USB full-speed (12Mbits/sec) hosts

It is compliant with the USB 2.0 specification and can be used control and data transfers as well as for diagnostic monitoring and firmware update. In fact firmware update by the host is only possible via USB and not possible via UART. The reason is that Titan consider it impractical to transfer firmware binaries exceeding 100Mb via UART.

The USB port on the Titan LE920 is typically the main interface between the module and OEM hardware.

The USB_DPLUS and USB_DMINUS signals have a clock rate of 480MHz. The signal traces should be routed carefully. Trace lengths, number of vias and capacitive loading should be minimized. The impedance value should be as close as possible to 90 Ohms differential.

The table below describes the USB interface signals:

Signal	LE920 Pad No.	Usage
USB_VBUS	A18	Power sense for the internal USB transceiver. Acceptable input voltage range 2.2V – 5.25V @ max 5mA consumption
USB_D-	F19	Minus (-) line of the differential, bi-directional USB signal to/from the peripheral device
USB D+	D19	Plus (+) line of the differential, bi-directional USB signal to/from the peripheral device

NOTE:

- USB_VBUS input power is internally used to detect the USB port and start enumeration process. It isn't used for supplying internal LE920 USB HW block. Therefore, only maximum of 5mA is required.
- The USB_VBUS is internally pulled-down by 10k ohm resistor. Customer host application must take into account voltage divider with the internal pull down resistor meeting the minimum of 2.2V input, in case that a serial resistor is placed on USB_VBUS signal.

NOTE:

In the case of not using USB communication, it is still highly recommended to place an optional USB connector in the application board.

USB physical communication is needed in the case of SW update

Reproduction forbidden without written authorization from Titan Automotive Solutions NV. - All Rights Reserved.

9. Serial Ports

The serial port on the Titan LE920 is typically a secondary interface between the module and OEM hardware.

Two serial ports are available on the module:

- MODEM SERIAL PORT 1(Main)
- MODEM SERIAL PORT 2 (Auxiliary)

Several configurations can be designed for the serial port on the OEM hardware.

The most common are:

- RS232 PC com port;
- Microcontroller UART @ 1.8V (Universal Asynchronous Receive Transmit) ;
- Microcontroller UART @ 5V or other voltages different from 1.8V.

Depending on the type of serial port on the OEM hardware, a level translator circuit may be needed to make the system work. The only configuration that does not need a level translation is the 1.8V UART.

The serial port 1 on LE920 is a +1.8V UART with all the 7 RS232 signals. It differs from the PC-RS232 in signal polarity (RS232 is reversed) and levels.

The Serial port 2 is a +1.8V Auxiliary UART.

The levels for LE920 UART are the CMOS levels:

Absolute Maximum Ratings -Not Functional

Parameter	LE920	
	Min	Max
Input level on any digital pin when on	-0.3V	+2.16 V
Input voltage on analog pins when on	-0.3V	+2.16 V

Operating Range - Interface levels

Level	LE920	
	Min	Max
Input high level	1.5V	2.1V
Input low level	-0.3V	0.5V
Output high level	1.35V	1.8V
Output low level	0V	0.45V

Reproduction forbidden without written authorization from Titan Automotive Solutions NV. - All Rights Reserved.

9.1. Modem Serial Port 1

Serial port 1 on the LE920 is a +1.8V UART with all 7 RS232 signals.

It differs from the PC-RS232 in the signal polarity (RS232 is reversed) and levels.

RS232 Pin Number	Signal	LE920 Pad Number	Name	Usage
1	DCD - dcd_uart	AE18	Data Carrier Detect	Output from the LE920 that indicates the carrier presence
2	RXD - Tx_uart	AF19	Transmit line *see Note	Output transmit line of the LE920 UART
3	TXD - Rx_uart	AH19	Receive line *see Note	Input receive of the LE920 UART
4	DTR - dtr_uart	AC18	Data Terminal Ready	Input to the LE920 that controls the DTE READY condition
5	GND	A6, A12, B13, B15….	Ground	ground
6	DSR - dsr_uart	AG18	Data Set Ready	Output from the LE920 that indicates the module is ready
7	RTS - rts_uart	AA18	Request to Send	Input to the LE920 that controls the Hardware flow control
8	CTS - cts_uart	AK19	Clear to Send	Output from the LE920 that controls the Hardware flow control
9	RI - ri_uart	AJ18	Ring Indicator	Output from the LE920 that indicates the Incoming call condition

NOTE:

In order to avoid a back-powering effect it is recommended to avoid having any HIGH logic level signal applied to the digital pins of the module when it is powered OFF or during an ON/OFF transition.

TIP:

For minimum implementations, only the TXD and RXD lines need be connected, the other lines can be left open provided a software flow control is implemented.

NOTE:

According to V.24, RX/TX signal names are referred to the application side, therefore on the LE920 side these signal are in the opposite direction: TXD on the application side will be connected to the receive line (here named TXD/ rx_uart) of the LE920 serial port and vice versa for RX.

Reproduction forbidden without written authorization from Titan Automotive Solutions NV. - All Rights Reserved.

9.2. Modem Serial Port 2

Serial port 2 on the LE920 is a +1.8V UART with only the RX and TX signals.

The signals of the LE920 serial port are:

PAD	Signal	I/O	Function	Type	COMMENT
AB19	TXD_AUX	O	Auxiliary UART (TX Data to DTE)	1.8V	
AD19	RXD_AUX	I	Auxiliary UART (RX Data to DTE)	1.8V	

NOTE:

In order to avoid a back-powering effect it is recommended to avoid having any HIGH logic level signal applied to the digital pins of the module when it is powered OFF or during an ON/OFF transition.

9.3. RS232 Level Translation

In order to interface the Titan LE920 with a PC com port or a RS232 (EIA/TIA-232) application a level translator is required. This level translator must:

- Invert the electrical signal in both directions;
- Change the level from 0/1.8V to +15/-15V.

Actually, the RS232 UART 16450, 16550, 16650 & 16750 chipsets accept signals with lower levels on the RS232 side (EIA/TIA-562), allowing a lower voltage-multiplying ratio on the level translator. Note that the negative signal voltage must be less than 0V and hence some sort of level translation is always required.

The simplest way to translate the levels and invert the signal is by using a single chip level translator. There are a multitude of them, differing in the number of drivers and receivers and in the levels (be sure to get a true RS232 level translator not a RS485 or other standards).

By convention the driver is the level translator from the 0-1.8V UART to the RS232 level. The receiver is the translator from the RS232 level to 0-1.8V UART.

In order to translate the whole set of control lines of the UART you will need:

- 5 drivers
- 3 receivers

NOTE:

The digital input lines working at 1.8V CMOS have an absolute maximum input voltage of 2.7V; therefore the level translator IC shall not be powered by the +3.8V supply of the module. Instead, it must be powered from a +1.8V (dedicated) power supply.

This is because in this way the level translator IC outputs on the module side (i.e. LE920 inputs) will work at +3.8V interface levels, damaging the module inputs.

Reproduction forbidden without written authorization from Titan Automotive Solutions NV. - All Rights Reserved.

An example of RS232 level adaption circuitry could be accomplished using a MAXIM transceiver (MAX218).

In this case the chipset is capable of translating directly from 1.8V to the RS232 levels (Example on 4 signals only).

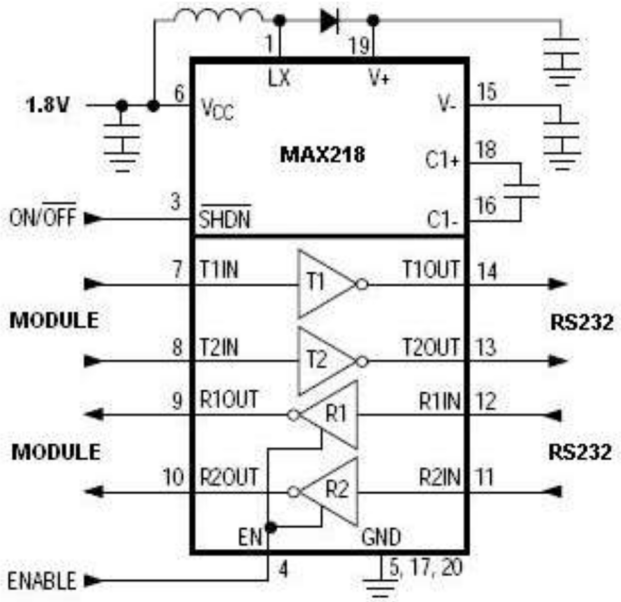

NOTE:
In this case the length of the lines on the application must be taken into account to avoid problems in the case of High-speed rates on RS232.

The RS232 serial port lines are usually connected to a DB9 connector with the following layout: signal names and directions are named and defined from the DTE point of view

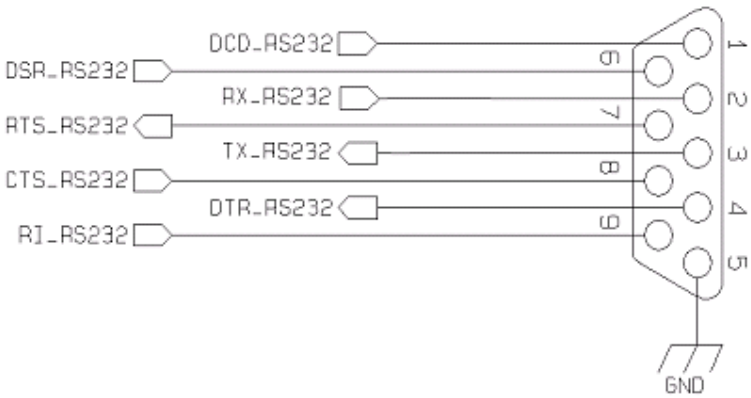

Reproduction forbidden without written authorization from Titan Automotive Solutions NV. - All Rights Reserved.

10. Peripheral Ports

In addition to Titan LE920 serial ports, the LE920 supports the following peripheral ports:

- SPI – Serial Peripheral Interface
- I2C - Inter-integrated circuit
- 2 x SDIO – Secure Digital I/O

10.1. SPI – Serial Peripheral Interface

The LE920 SPI supports the following:

- Master Mode only
- 1.8V CMOS level
- Up to 26MHz clock rate

NOTE:

SPI is supported only on the Linux side.

LE920 can support Master mode only, and can't be configured as slave mode.

PAD	Signal	I/O	Function	Type	COMMENT
P19	SPI_CLK	O	SPI Clock output	1.8V	
M19	SPI_MISO	I	SPI data Master Input Slave output	1.8V	
K19	SPI_MOSI	O	SPI data Master Output Slave input	1.8V	
N18	SPI_CS	O	SPI Chip select output	1.8V	

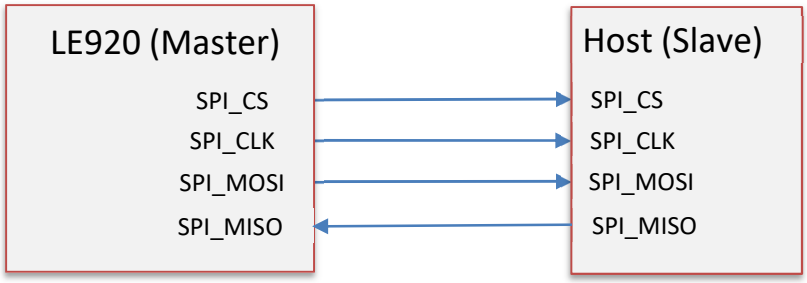

Reproduction forbidden without written authorization from Titan Automotive Solutions NV. - All Rights Reserved.

10.2. I2C - Inter-integrated circuit

The LE920 I2C is an alternate function of our GPIO 1-10 pins.

Any GPIO can be configured as SCL and SDA

Available only from Modem side as SW emulation of I2C on GPIO lines.

LE920 supports I2C Master Mode only.

NOTE:

I2C is supported only on from Modem side as SW emulation of I2C on GPIO lines.

Refer to LE920 AT SW manual for command settings

10.3. SDIO – Secure Digital I/O

The LE920 is used to support standard SD/MMC memory cards with the following:

- Interface with SD/MMC memory cards up to 2 TB
- Max clock: 50 MHz SDR at 1.8 V, Max Data: 25MB/s, MMC standard: MMC 4.4 type 3 SDR at 1.8 V; SD standard: UHS-SDR25 at 1.8 V
- Max clock: 50 MHz SDR at 2.95 V, Max Data: 25MB/s, MMC standard: MMC 4.4 type 3 SDR at 2.95 V; SD standard: DS, HS at 2.95

PAD	Signal	I/O	Function	Type	COMMENT
AH17	SD/MMC_CMD	O	SD Command	1.8/2.95V	
AD17	SD/MMC_CLK	O	SD Card Clock	1.8/2.95V	
Y17	SD/MMC_DATA0	I/O	SD Serial Data 0	1.8/2.95V	
AF17	SD/MMC_DATA1	I/O	SD Serial Data 1	1.8/2.95V	
AB17	SD/MMC_DATA2	I/O	SD Serial Data 2	1.8/2.95V	
W17	SD/MMC_DATA3	I/O	SD Serial Data 3	1.8/2.95V	
U17	SD/MMC_CD	I	SD card detect input	1.8V	Active Low

Reproduction forbidden without written authorization from Titan Automotive Solutions NV. - All Rights Reserved.

Connection diagram of the SD interface is shown below:

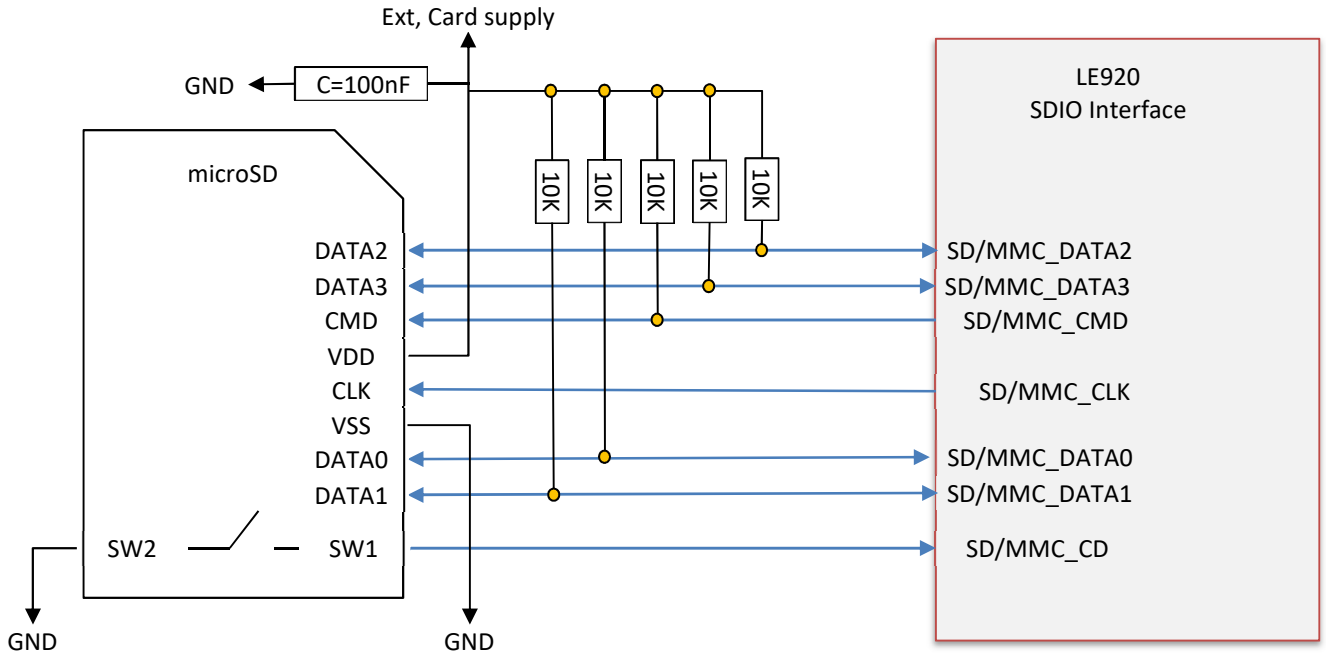

NOTE:

1. SDIO is supported only on the Linux side.
2. SD/MMC card supply shall be provided by the Host application board. LE920 doesn't provide a dedicated SD/MMC card supply.
3. Pull-up resistors should be place on the application host board
4. Card detection input has an internal pull-up resistor

Reproduction forbidden without written authorization from Titan Automotive Solutions NV. - All Rights Reserved.

10.4. Wi-Fi (SDIO) control Interface

The LE920 has an integrated SW driver for supporting Qualcomm QCA6053 Wi-Fi chipset via a 2nd dedicated SD bus interface.

The secondary SD bus interface can be used only with the QCA6053 chipset, and can't be used as external SD/MMC card connection.

For detailed explanation, refer to Titan 80407NT11289A - xE920 - Wi-Fi interface Application Note

PAD	Signal	I/O	Function	Type	COMMENT
AB3	WiFi_SD_CMD	O	Wi-Fi SD Command	1.8V	
AM3	WiFi_SD_CLK	O	Wi-Fi SD Clock	1.8V	
AD3	WiFi_SD _DATA0	I/O	Wi-Fi SD Serial Data 0	1.8V	
AF3	WiFi_SD _DATA1	I/O	Wi-Fi SD Serial Data 1	1.8V	
AH3	WiFi_SD _DATA2	I/O	Wi-Fi SD Serial Data 2	1.8V	
AK3	WiFi_SD _DATA3	I/O	Wi-Fi SD Serial Data 3	1.8V	
Y3	WiFi_RST_Ctr	O	Wi-Fi Reset output control / Power enable control	1.8V	Active Low

WARNING:

Wi-Fi (SDIO) control interface is fully supported in LE920-EU and LE920-NA.

However, in some cases isn't supported in LE920-EUG and LE920-NAG.

If Wi-Fi control is required for LE920-NAG or LE920-NAG, please contact your local Titan rep. or contact customer support for specific ordering info.

NOTE:

'Wifi_RST_Ctr' should have an optional Pull-up resistor to 1.8V on the host application, to disable Wi-Fi reset function if needed

Reproduction forbidden without written authorization from Titan Automotive Solutions NV. - All Rights Reserved.

11. Audio Section Overview

The LE920 module support analog and digital audio interfaces.

11.1. Analog Audio

The LE920 module provides single analog audio path transmitting and receiving.

Please refer to the xE920_Audio_Settings_Application_Note, 80404NT10095A

WARNING:

LE920 Analog audio implementation uses an internal CODEC.
LE920 internal codec uses the same external LE920 digital Audio interface signals
Therefore, applications that are using analog audio, must make sure that the digital audio interface shall be either not connected, or Hi-Z, or 'input' to Host application.

11.2. Digital Audio

LE920 can be connected to an external codec through the digital interface.

The product provides one Digital Audio Interface (DVI) on the following Pins:

PAD	Signal	I/O	Function	Type	COMMENT
D11	DVI_WA0	O	Digital Audio Interface (WA0)	B-PD 1.8V	PCM_SYNC
C8	DVI_RX	I	Digital Audio Interface (RX)	B-PD 1.8V	PCM_DIN
D9	DVI_TX	O	Digital Audio Interface (TX)	B-PD 1.8V	PCM_DOUT
C10	DVI_CLK	O	Digital Audio Interface (CLK)	B-PD 1.8V	PCM_CLK

LE920 DVI supports PCM master 2048khz short frame

Reproduction forbidden without written authorization from Titan Automotive Solutions NV. - All Rights Reserved.

Primary (short sync) PCM interface (2048 kHz clock)

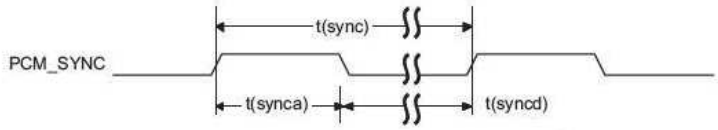

PCM_SYNC timing

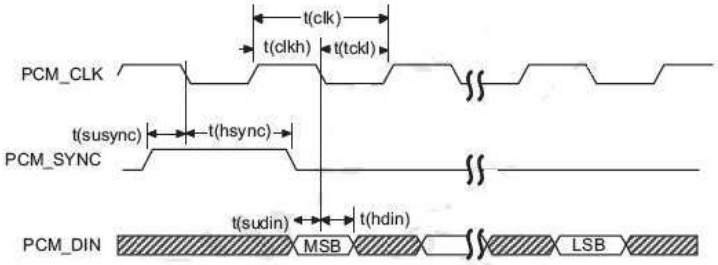

PCM_CODEC to LE920 timing

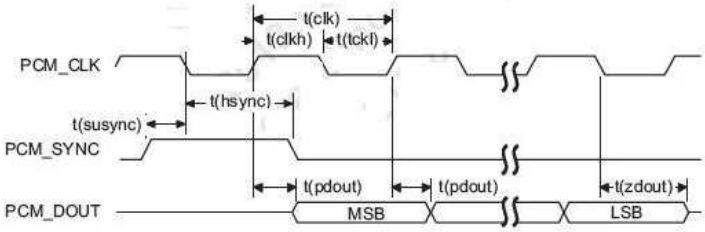

Le920 to PCM_CODEC timing

PCM_CODEC timing parameters

Parameter		Comments	Min	Typ	Max	Unit
t(sync)	PCM_SYNC cycle time		–	125	–	µs
t(synca)	PCM_SYNC asserted time		–	488	–	ns
t(syncd)	PCM_SYNC de-asserted time		–	124.5	–	µs
t(clk)	PCM_CLK cycle time		–	488	–	ns
t(clkh)	PCM_CLK high time		–	244	–	ns
t(clkl)	PCM_CLK low time		–	244	–	ns
t(sync_offset)	PCM_SYNC offset time to PCM_CLK falling		–	122	–	ns
t(sudin)	PCM_DIN setup time to PCM_CLK falling		60	–	–	ns
t(hdin)	PCM_DIN hold time after PCM_CLK falling		60	–	–	ns
t(pdout)	Delay from PCM_CLK rising to PCM_DOUT valid		–	–	60	ns
t(zdout)	Delay from PCM_CLK falling to PCM_DOUT HIGH-Z		–	–	60	ns

Reproduction forbidden without written authorization from Titan Automotive Solutions NV. - All Rights Reserved.

12. General Purpose I/O

The general-purpose I/O pads can be configured to act in three different ways:

- input
- output
- alternate function (internally controlled)

Input pads can only be read and report the digital value (high or low) present on the pad at the read time; output pads can only be written or queried and set the value of the pad output; an alternate function pad is internally controlled by the LE920 firmware and acts depending on the function implemented.

The following GPIOs are available on the LE920.

PAD	Signal	I/O	Function	Type	Drive Strength
F9	GPIO_01	I/O	Configurable GPIO	CMOS 1.8V	2mA
E10	GPIO_02	I/O	Configurable GPIO	CMOS 1.8V	2mA
F11	GPIO_03	I/O	Configurable GPIO	CMOS 1.8V	2mA
E12	GPIO_04	I/O	Configurable GPIO	CMOS 1.8V	2mA
F13	GPIO_05	I/O	Configurable GPIO	CMOS 1.8V	2mA
E14	GPIO_06	I/O	Configurable GPIO	CMOS 1.8V	2mA
R18	GPIO_07	I/O	Configurable GPIO	CMOS 1.8V	2mA
S19	GPIO_08	I/O	Configurable GPIO	CMOS 1.8V	2mA
U19	GPIO_09	I/O	Configurable GPIO	CMOS 1.8V	2mA
W19	GPIO_10	I/O	Configurable GPIO	CMOS 1.8V	2mA

NOTE:

In order to avoid a back-powering effect it is recommended to avoid having any HIGH logic level signal applied to the digital pins of the module when it is powered OFF or during an ON/OFF transition.

NOTE:

LE920 GPIO can also be used as alternate I2C function.
Refer to I2C section

Reproduction forbidden without written authorization from Titan Automotive Solutions NV. - All Rights Reserved.

12.1. Logic Level Specifications

Where not specifically stated, all the interface circuits work at 1.8V CMOS logic levels.

The following table shows the logic level specifications used in the LE920 interface circuits:

For 1,8V signals:

Absolute Maximum Ratings -Not Functional

Parameter	LE920	
	Min	Max
Input level on any digital pin when on	-0.3V	+2.16 V
Input voltage on analog pins when on	-0.3V	+2.16 V

Operating Range - Interface levels (1.8V CMOS)

Level	LE920	
	Min	Max
Input high level	1.5V	2.1V
Input low level	-0.3V	0.5V
Output high level	1.35V	1.8V
Output low level	0V	0.45V

12.2. Using a GPIO Pad as Input

The GPIO pads, when used as inputs, can be connected to a digital output of another device and report its status, provided this device has interface levels compatible with the 1.8V CMOS levels of the GPIO.

If the digital output of the device is connected with the GPIO input, the pad has interface levels different from the 1.8V CMOS. It can be buffered with an open collector transistor with a 47KΩ pull-up resistor to 1.8V.

Reproduction forbidden without written authorization from Titan Automotive Solutions NV. - All Rights Reserved.

12.3. Using a GPIO Pad as Output

The GPIO pads, when used as outputs, can drive 1.8V CMOS digital devices or compatible hardware. When set as outputs, the pads have a push-pull output and therefore the pull-up resistor may be omitted.

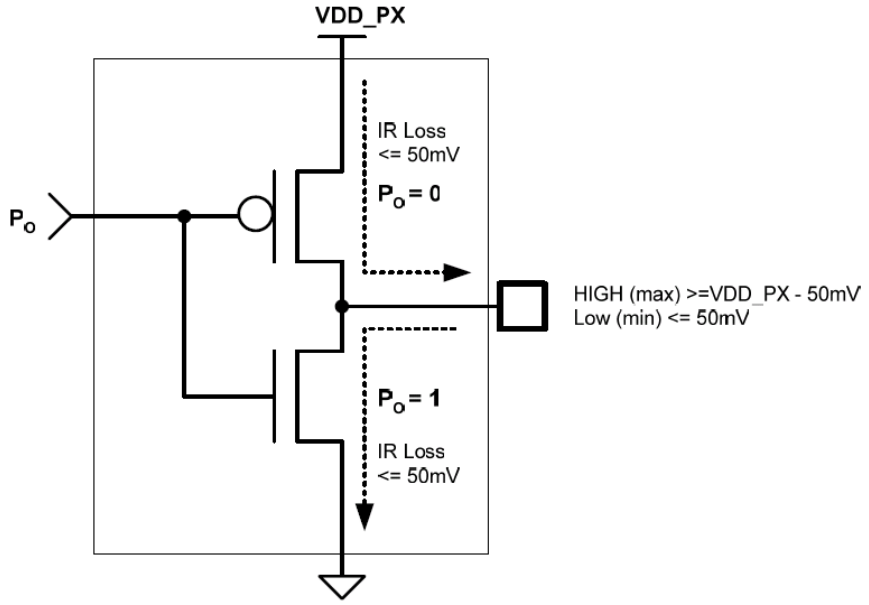

output PAD equivalent circuit

12.4. Using the Temperature Monitor Function

12.4.1. Short Description

The Temperature Monitor is a function of the module that permits to control its internal temperature and if properly set (see the #TEMPMON command on AT Interface guide) it raises to High Logic level a GPIO when the maximum temperature is reached.

Reproduction forbidden without written authorization from Titan Automotive Solutions NV. - All Rights Reserved.

12.5. Indication of Network Service Availability

The STAT_LED pin status shows information on the network service availability and call status. In the LE920 modules, the STAT_LED usually needs an external transistor to drive an external LED. Because of the above, the status indicated in the following table is reversed with respect to the pin status:

LED status	Device Status
Permanently off	Device off
Fast blinking (Period 1s, Ton 0,5s)	Net search / Not registered / turning off
Slow blinking (Period 3s, Ton 0,3s)	Registered full service
Permanently on	a call is active

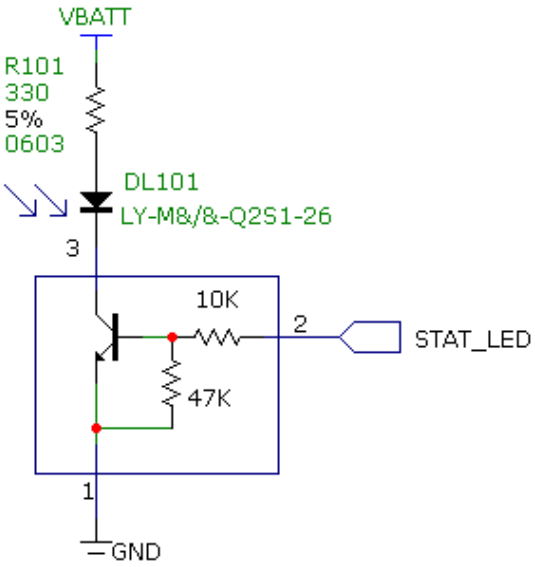

Reproduction forbidden without written authorization from Titan Automotive Solutions NV. - All Rights Reserved.

12.6. RTC Bypass

The VRTC pin brings out the Real Time Clock supply, which is separate from the rest of the digital part, allowing having only the RTC operating when all the other parts of the device are turned off.

If maintaining internal RTC block is needed, it recommended to connect a backup capacitor or a coin cell to this pin (valid range from 2.5V to 3.2V), otherwise, it can be left unconnected

Operating Modes:

1. LE920 has a valid VBAT supply, and the unit is turned ON – RTC block supply will be generated from main VBAT supply, and the VRTC pin will output the VRTC supply, charging external coin cell or capacitor.
2. LE920 has no VBAT connected – The External coin cell or capacitor will maintain VRTC supply, keeping the internal RTC unit block operational.

NOTE:

NO devices may be powered from this pin.

12.7. VAUX Power Output

A regulated power supply output is provided in order to supply small devices from the module. This output is active when the module is ON and goes OFF when the module is shut down. The operating range characteristics of the supply are:

Operating Range – VAUX power supply

	Min	Typical	Max
Output voltage	1.75V	1.80V	1.85V
Output current			100mA
Output bypass capacitor (Inside the module)			1µF

Reproduction forbidden without written authorization from Titan Automotive Solutions NV. - All Rights Reserved.

13. ADC section

13.1. ADC Converter

13.1.1. Description

The on board ADCs are 8-bit converters. They are able to read a voltage level in the range of 0-2 volts applied on the ADC pin input and store and convert it into 8 bit word.

	Min	Max	Units
Input Voltage range	0	1.7	Volt
AD conversion	-	8	bits
Resolution	-	< 6.6	mV

The LE920 module provides 3 Analog to Digital Converters.

13.1.2. Using ADC Converter

An AT command is available to use the ADC function.

The command is AT#ADC=1,2. The read value is expressed in mV

Refer to SW User Guide or AT Commands Reference Guide for the full description of this function.

Reproduction forbidden without written authorization from Titan Automotive Solutions NV. - All Rights Reserved.

14. Mounting the module on your board

14.1. General

The LE920 modules have been designed to be compliant with a standard lead-free SMT process.

14.2. Finishing & Dimensions

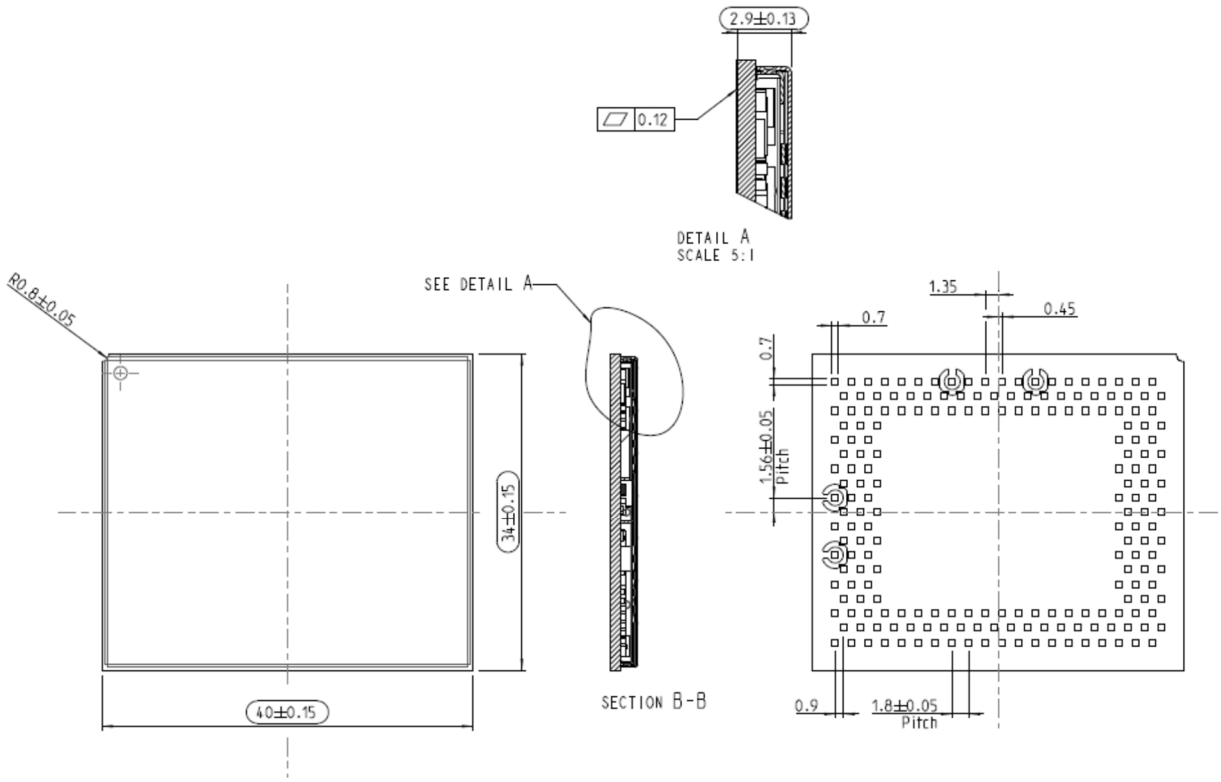

Reproduction forbidden without written authorization from Titan Automotive Solutions NV. - All Rights Reserved.

14.3. Recommended foot print for the application

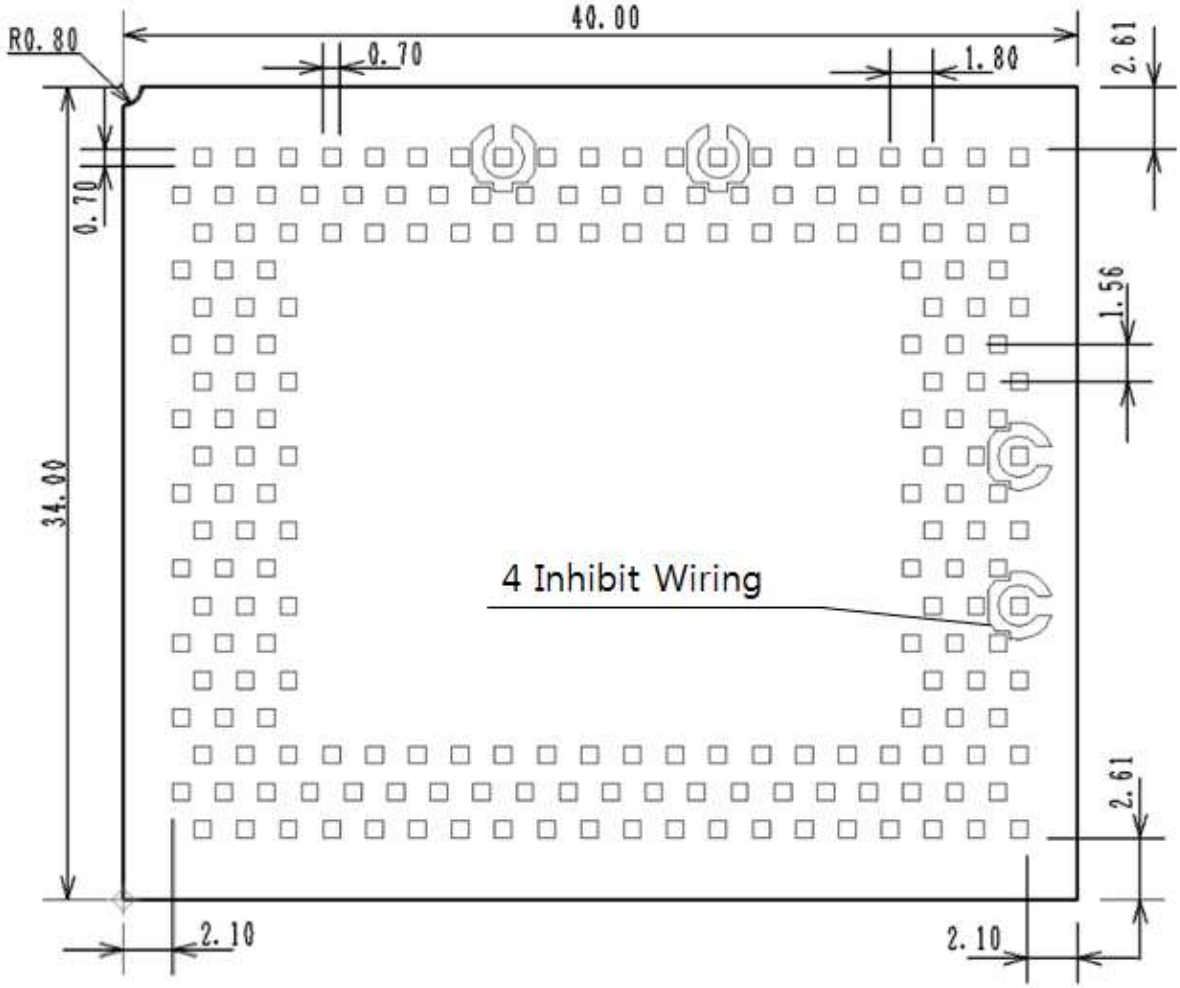

198 pads

Top View

In order to easily rework the LE920 it is suggested to consider that the application has a 1.5 mm placement inhibit area around the module.

It is also suggested, as a common rule for an SMT component, to avoid having a mechanical part of the application in direct contact with the module.

NOTE:

In the customer application, the region under WIRING INHIBIT (see figure above) must be clear from signal or ground paths.

Reproduction forbidden without written authorization from Titan Automotive Solutions NV. - All Rights Reserved.

14.4. Stencil

Stencil's apertures layout can be the same as the recommended footprint (1:1). A suggested thickness of stencil foil is greater than 120 µm.

14.5. PCB Pad Design

Non solder mask defined (NSMD) type is recommended for the solder pads on the PCB.

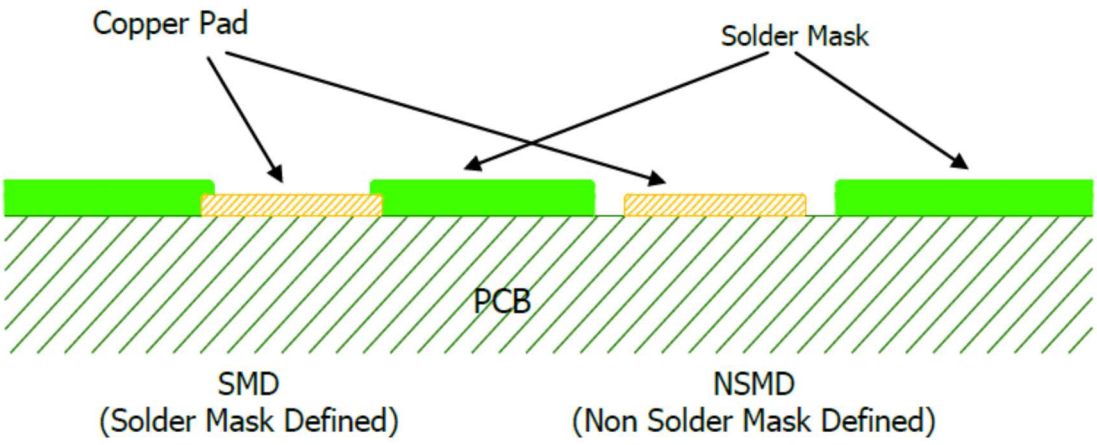

Reproduction forbidden without written authorization from Titan Automotive Solutions NV. - All Rights Reserved.

14.6. Recommendations for PCB Pad Dimensions (mm)

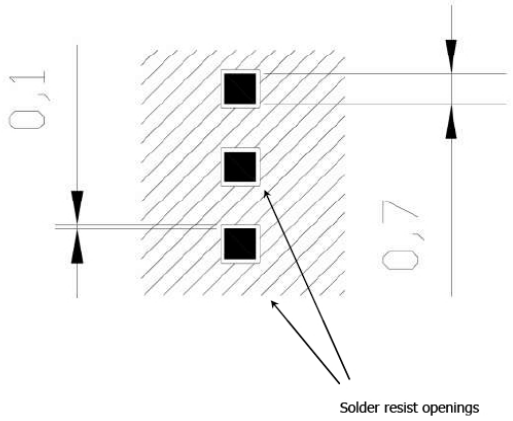

It is not recommended to place via or micro-via not covered by solder resist in an area of 0,3 mm around the pads unless it carries the same signal of the pad itself (see following figure).

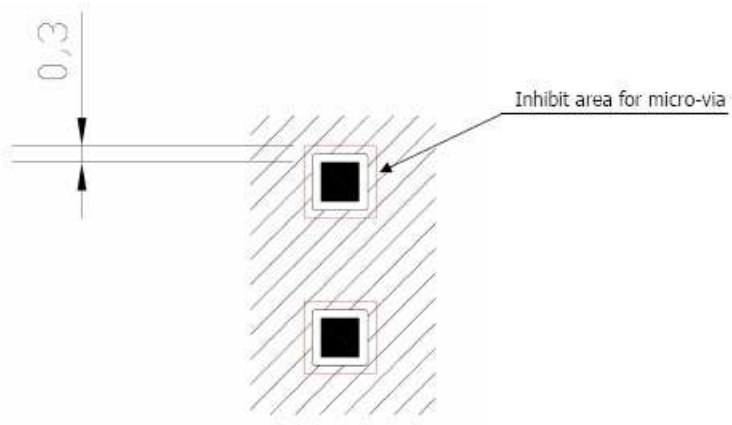

Holes in pad are allowed only for blind holes and not for through holes.

Recommendations for PCB Pad Surfaces:

Finish	Layer thickness (um)	Properties
Electro-less Ni / Immersion Au	3 –7 / 0.05 – 0.15	good solder ability protection, high shear force values

The PCB must be able to resist the higher temperatures which occur during the lead-free process. This issue should be discussed with the PCB-supplier. Generally, the wettability of tin-lead solder paste on the described surface plating is better compared to lead-free solder paste.

Reproduction forbidden without written authorization from Titan Automotive Solutions NV. - All Rights Reserved.

14.7. Solder Paste

Solder Paste	Lead free
	Sn/Ag/Cu

We recommend using only “no clean” solder paste in order to avoid the cleaning of the modules after assembly.

14.7.1. Solder Reflow

Recommended solder reflow profile:

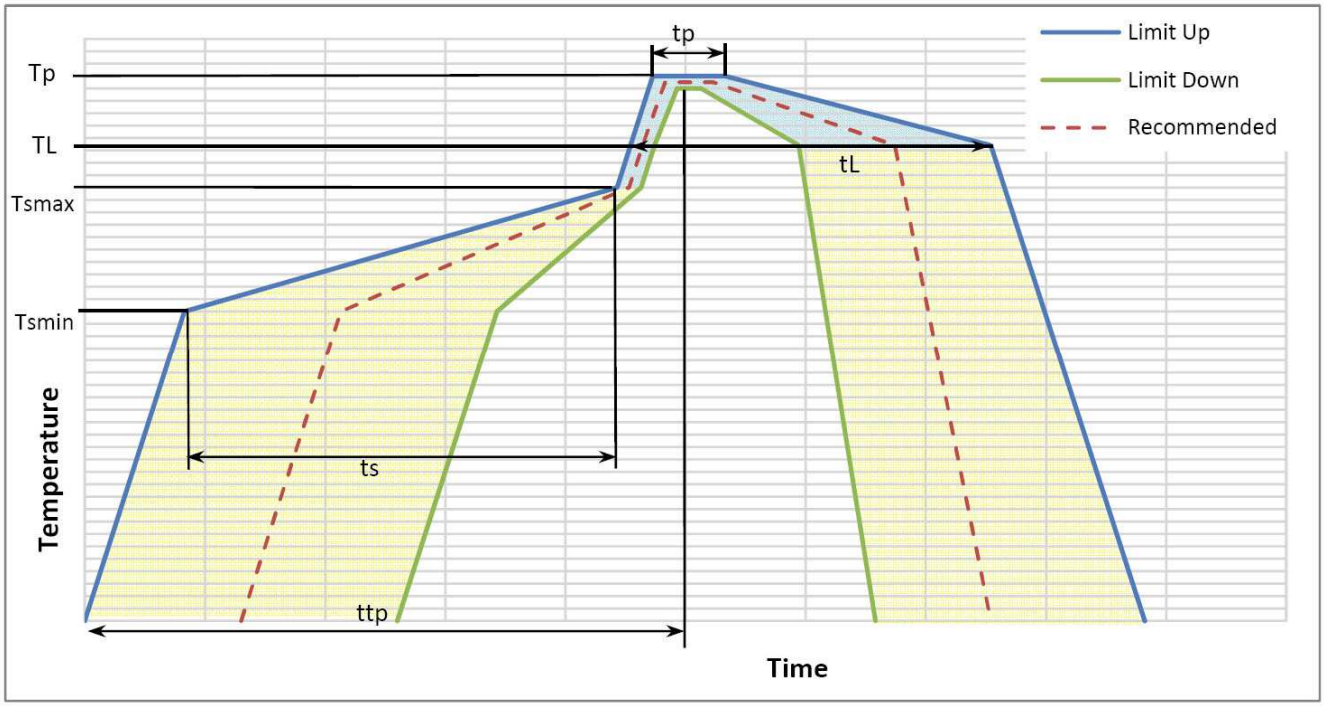

Reproduction forbidden without written authorization from Titan Automotive Solutions NV. - All Rights Reserved.

Profile Feature	Pb-Free Assembly
Average ramp-up rate (T_L to T_P)	3°C/second max
Preheat – Temperature Min (Tsmin) – Temperature Max (Tsmax) – Time (min to max) (ts)	 150°C 200°C 60-180 seconds
Tsmax to TL – Ramp-up Rate	 3°C/second max
Time maintained above: – Temperature (TL) – Time (tL)	 217°C 60-150 seconds
Peak Temperature (Tp)	245 +0/-5°C
Time within 5°C of actual Peak Temperature (tp)	10-30 seconds
Ramp-down Rate	6°C/second max.
Time 25°C to Peak Temperature	8 minutes max.

NOTE:

All temperatures refer to topside of the package, measured on the package body surface.

WARNING:

The LE920 module withstands one reflow process only.

Reproduction forbidden without written authorization from Titan Automotive Solutions NV. - All Rights Reserved.

15. Application guide

15.1. Debug of the LE920 in production

To test and debug the mounting of LE920, we strongly recommend foreseeing test pads on the host PCB, in order to check the connection between the LE920 itself and the application and to test the performance of the module by connecting it with an external computer. Depending on the customer application, these pads include, but are not limited to the following signals:

- TXD
- RXD
- ON/OFF
- SHUTDOWN
- RESET
- GND
- VBATT
- TXD_AUX
- RXD_AUX
- USB_VBUS
- USB_D+
- USB_D-

In addition the below signal are also recommended (but not must)

- PWRMON
- STAT_LED
- SW_RDY

Reproduction forbidden without written authorization from Titan Automotive Solutions NV. - All Rights Reserved.

15.2. Bypass capacitor on Power supplies

When a sudden voltage is asserted to or cut from the power supplies, the steep transition makes some reactions such as overshoot and undershoot.

This abrupt voltage transition can affect the device causing it to not work or make it malfunction.

Bypass capacitors are needed to alleviate this behavior. The behavior can be affected differently according to the various applications. Customers must pay special attention to this when they design their application board.

The length and width of the power lines need to be considered carefully and the capacitance of the capacitors need to be selected accordingly.

The capacitor will also prevent ripple of the power supplies and the switching noise caused in TDMA systems like GSM.

Especially, a suitable bypass capacitor must be mounted on the Vbatt & Vbatt_PA (Pads AP17,AP19,AR18,AS17,AS19,AT18,AU17,AU19) and USB_VBUS (Pad A18) lines in the application board.

The recommended values can be presented as:

- 100uF for Vbatt
- 4.7uF for USB_VBUS (including the 1uF capacitor inside the module).

Customers must still consider that the capacitance mainly depends on the conditions of their application board.

Generally more capacitance is required when the power line is longer.

Reproduction forbidden without written authorization from Titan Automotive Solutions NV. - All Rights Reserved.

15.3. SIM interface

This section deals with the recommended schematics for the design of SIM interfaces on the application boards.

15.3.1. SIM schematic example

Figure 1 illustrates in particular how the application side should be designed, and what values the components should have.

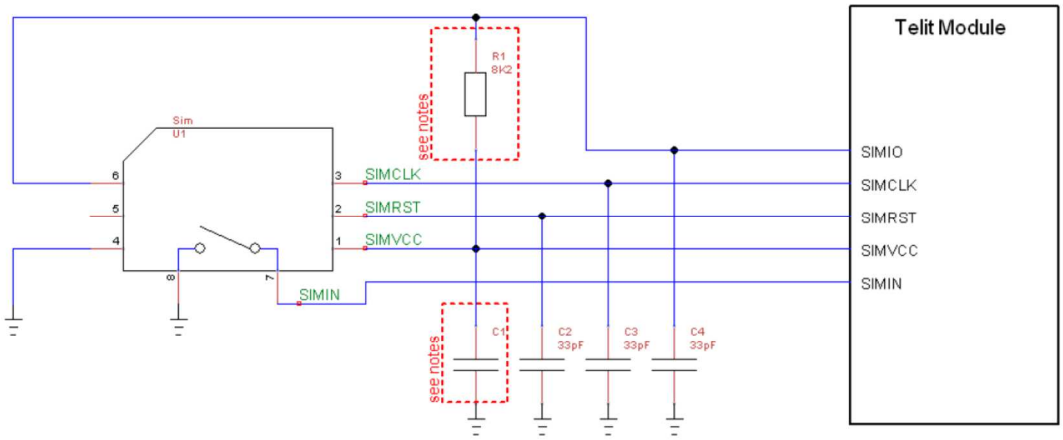

NOTE FOR R1:

The resistor value on SIMIO pulled up to SIMVCC should be defined accordingly in order to be compliant with 3GPP specification for USIM electrical testing.

LE920 contains an internal pull-up resistor of 20KΩ on SIMIO.

However, the un-mounted option in the application design can be recommended in order to tune R1 if necessary.

The following Table lists the values of C1 to be adopted with the LE920 product:

Product P/N	C1 range (nF)
LE920-EU/NA	100 nF

Refer to the following document for the detail:

- 80000NT10026A - SIM Interface And ESD Protection Application Note Rev.2

Reproduction forbidden without written authorization from Titan Automotive Solutions NV. - All Rights Reserved.

15.3.2. eSIM interface guidelines

NOTE:

eSIM feature available with LE920-NA AUTO S model only.

LE920-NA AUTO S model designed to operate either with internal build-in eSIM, external SIM card or with both options, switching SIM cards using following setups:

- For using internal eSIM configuration only, connect E8 pin “ESIM_RST” to B11 “SIMRST1”.

  Connect B7 SIMIN1 to GND, leave all other SIM card ports disconnected:

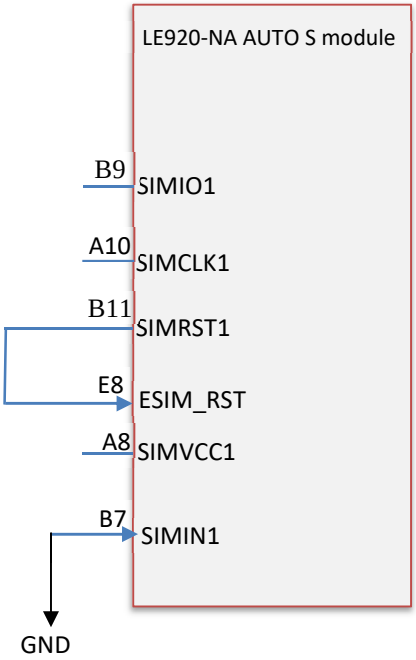

Reproduction forbidden without written authorization from Titan Automotive Solutions NV. - All Rights Reserved.

- For external SIM configuration only, leave E8 open (or set to GND) and follow 15.3.1 section guidelines.

- For configuration with both internal eSIM and external SIM cards use following approach:

  1) Both eSIM and external SIM share the same lines except SIMRST1 and SIMIN1 lines that should be switched between them, either electronically or manually. For SIMRST1 switching, it is mandatory to keep second output of SW1 in high Z state when connected to the first one, therefore analog relay (for example DG9431 Single SPDT Analog Switch) / mechanical relay / 3 state buffer with separate enable for each output is recommended.

  2) Connect 200kΩ pulldown resistor (R2) to external SIM Reset line for keeping external SIM in high Z state during internal eSIM use, whenever SIMRST1 signal routed to E8 ESIM_RST path. This method prevents interference between the SIM cards enabling only one of them by SW1 selection.

  3) For SIMIN1 card detection mechanism, similar approach to SIMRST1 recommended. Manual selection with 0Ω resistors is another option.

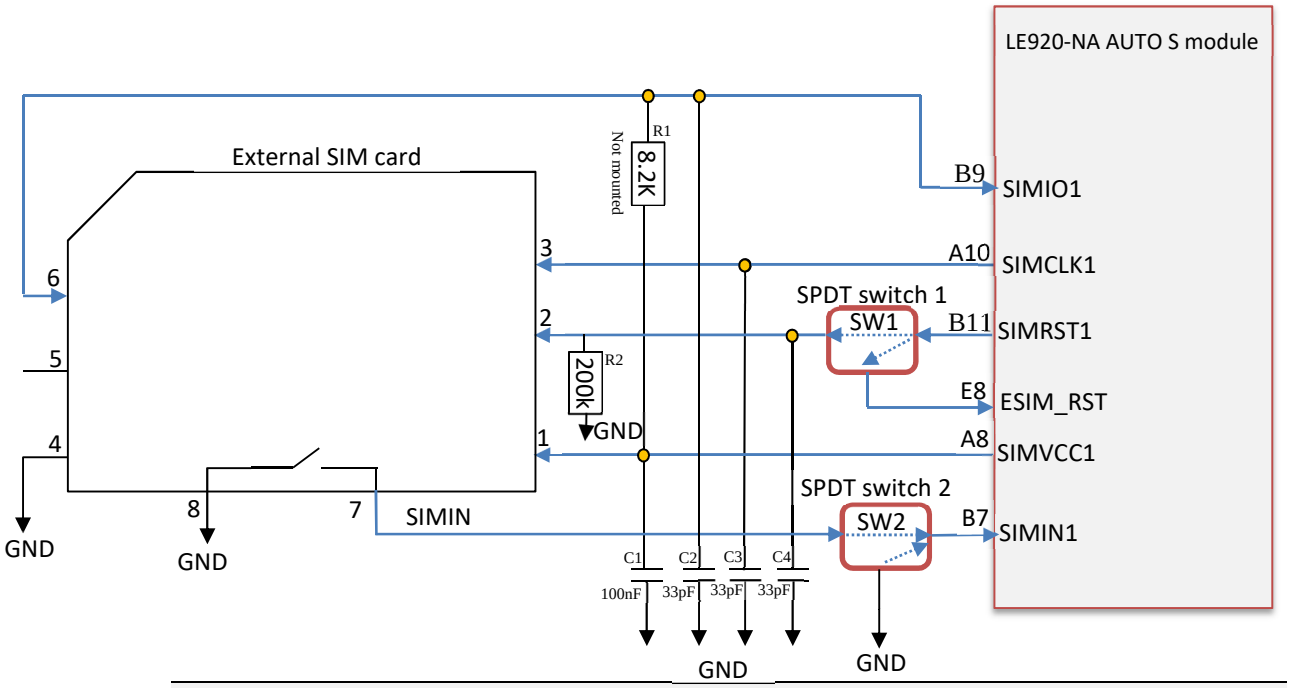

NOTE FOR R1:

The resistor value on SIMIO pulled up to SIMVCC should be defined accordingly in order to be compliant with 3GPP specification.

LE920-NA AUTO S contains an internal pull-up resistor on SIMIO1.

However, the un-mounted option in the application design can be recommended in order to tune R1 if necessary.

Reproduction forbidden without written authorization from Titan Automotive Solutions NV. - All Rights Reserved.

15.4. EMC recommendations

All LE920 signals are provided with some EMC protection. Nevertheless the accepted level differs according to which pin. The characteristics are described in the following Table:

Pad	Signal	I/O	Function	Contact	Air
All Pins					
	All			± 4KV	± 8KV
Antenna					
AD1,AU9,S1	Antenna Pads	AI	Antenna pad	± 8KV	± 15KV

Appropriate series resistors must be considered to protect the input lines from overvoltage.

Reproduction forbidden without written authorization from Titan Automotive Solutions NV. - All Rights Reserved.

15.5. Download and Debug Port

One of the following options should be chosen in the design of host system in order to download or upgrade the Titan software and debug LE920 when LE920 is already mounted on a host system.

Users who use both UART and USB interfaces to communicate with LE920

- Must implement a USB download method in a host system for upgrading LE920 when it is mounted.

Users who use USB interface only to communicate with LE920

- Must arrange for a USB port in a host system for debugging or upgrading LE920 when it is mounted.

Users who use UART interface only to communicate with LE920

- **Must arrange for a USB port in a host system for debugging or upgrading LE920 when it is mounted.**

Reproduction forbidden without written authorization from Titan Automotive Solutions NV. - All Rights Reserved.

16. Packing system

The Titan LE920 is packaged on trays. The tray is JEDEC compliant, injection molded antistatic Modified Polyphenylene ether (MPPO). It has good thermal characteristics and can withstand a the standard baking temperature up to 125°C, thereby avoiding handling the modules if baking is required. The trays are rigid, thus providing more mechanical protection against transport stress. Additionally they are re-usable and so environmentally sustainable.

There are 2 (two) antistatic rubber bands that enclose each envelope.

The carton box is rigid, thus offering mechanical protection. The carton box has one flap across the whole top surface. It is sealed with tape along the edges of the box.

Tray		in each tray	inside each envelope		inside each carton box	
Modules/tray	**Description**	**modules/ tray**	**trays/ envelope**	**modules/ envelope**	**envelopes/ carton box**	**modules/ box**
xE920 packaging	JEDEC Tray	24	**5+ 1 empty**	**120**	4	**480**

	Qty
Minimum Order Quantity (MOQ)	**120**
Standard Packing Quantity (SPQ)	**480**

Each tray contains 24 pieces as shown in the following picture:

Reproduction forbidden without written authorization from Titan Automotive Solutions NV. - All Rights Reserved.

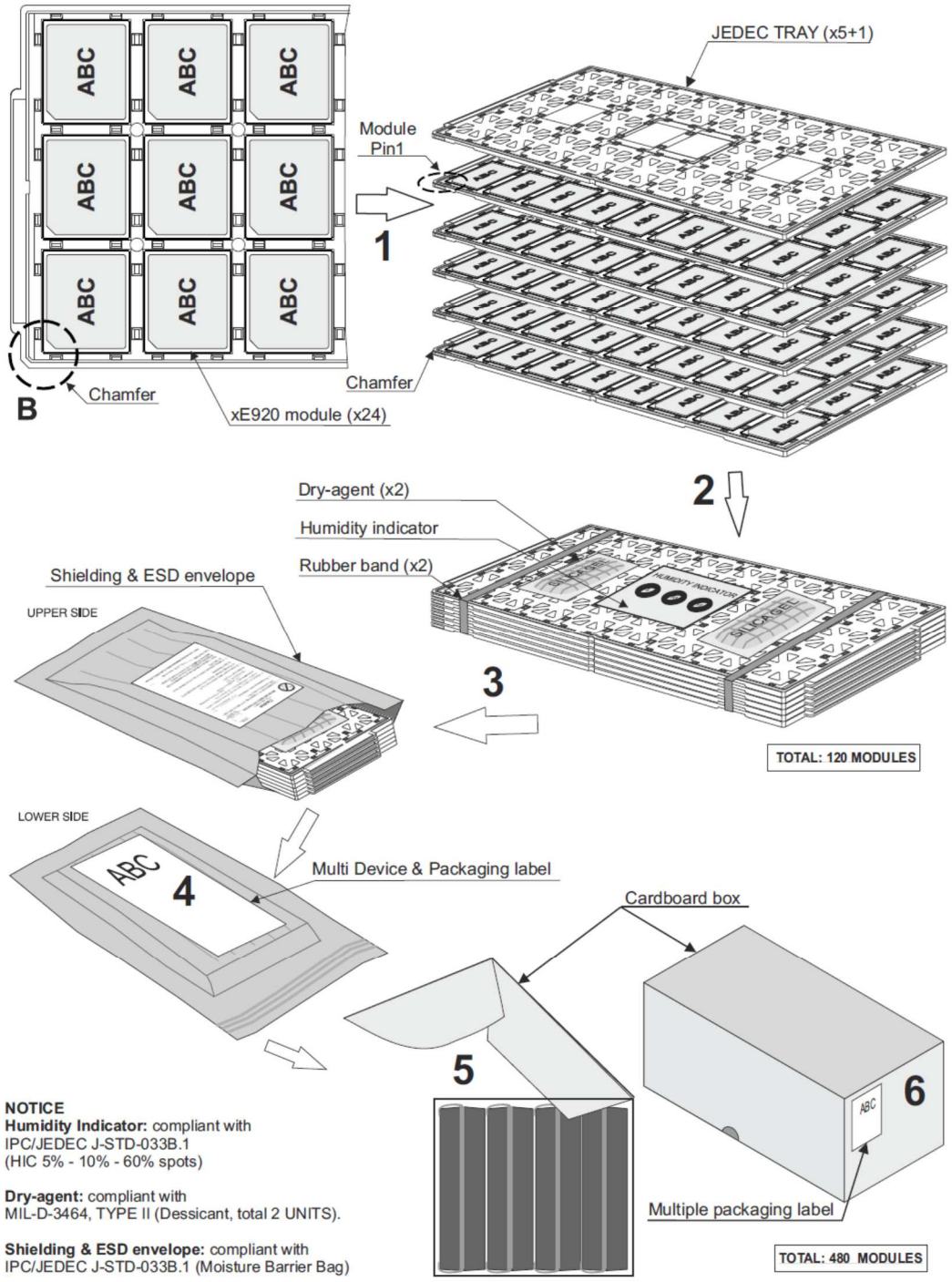

Reproduction forbidden without written authorization from Titan Automotive Solutions NV. - All Rights Reserved.

16.1. Tray Drawing

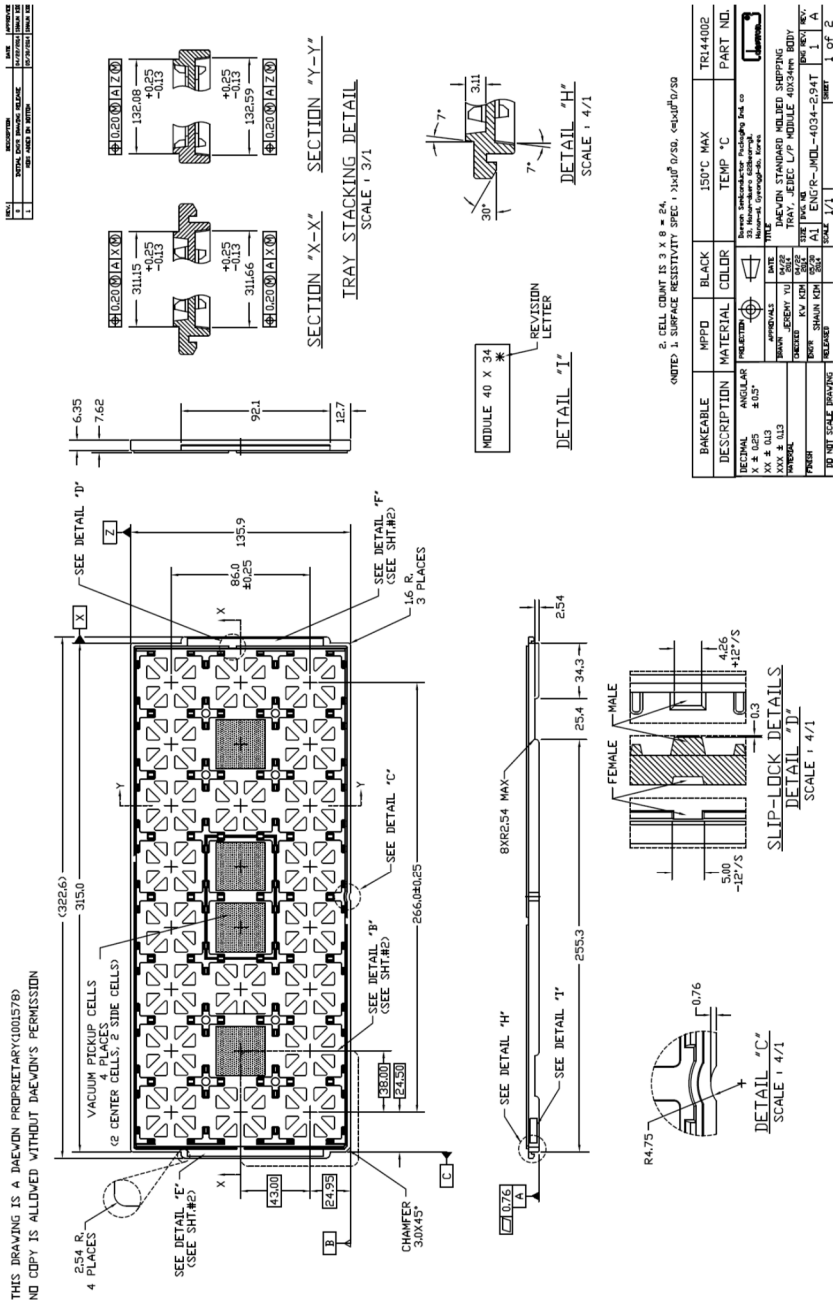

Reproduction forbidden without written authorization from Titan Automotive Solutions NV. - All Rights Reserved.

16.2. Moisture Sensitivity

The LE920 is a Moisture Sensitive Device level 3, in accordance with standard IPC/JEDEC J-STD-020. Observe all of the requirements for using this kind of components.

Calculated shelf life in sealed bag: 4 months at <40°C and <90% relative humidity (RH).

Reproduction forbidden without written authorization from Titan Automotive Solutions NV. - All Rights Reserved.

17. Safety Recommendations

READ CAREFULLY

Be sure that the use of this product is allowed in your country and in the environment required. The use of this product may be dangerous and must be avoided in the following areas:

- Where it can interfere with other electronic devices in environments such as hospitals, airports, aircrafts, etc.
- Where there is risk of explosion such as gasoline stations, oil refineries, etc.

It is the responsibility of the user to enforce the country regulations and the specific environment regulations.

Do not disassemble the product; any mark of tampering will compromise the warranty validity.

We recommend following the instructions of the hardware user guides for correct wiring of the product. The product must be supplied with a stabilized voltage source and the wiring conform to the security and fire prevention regulations.

The product must be handled with care, avoiding any contact with the pins because electrostatic discharges may damage the product itself. The same caution must be taken for the SIM, checking carefully the instructions for its use. Do not insert or remove the SIM when the product is in power saving mode.

The system integrator is responsible for the functioning of the final product; therefore, care must be taken of the external components of the module, as well as of any project or installation issue, because of the risk of disturbing the GSM network or external devices or having any impact on safety. Should there be any doubt, please refer to the technical documentation and the regulations in force.

Every module must be equipped with a proper antenna with the specified characteristics. The antenna must be installed with care in order to avoid any interference with other electronic devices and must be installed with the guarantee of a minimum 20 cm distance from a human body. In case this requirement cannot be satisfied, the system integrator must assess the final product against the SAR regulation.

The European Community provides some Directives for electronic equipment introduced on the market. All the relevant information is available on the European Community website:

http://europa.eu.int/comm/enterprise/rtte/dir99-5.htm

The text of the Directive 99/05 regarding telecommunication equipment is available, while the applicable Directives (Low Voltage and EMC) are available at:

http://europa.eu.int/comm/enterprise/rtte/dir99-5.htm

Reproduction forbidden without written authorization from Titan Automotive Solutions NV. - All Rights Reserved.

18. Document History

Revision	Date	Changes
0-draft1	2012-10-03	First issue
0-draft2	2012-12-11	- Remove SIM2 interface - Remove external GPS LNA support
0-draft3	2013-03-12	Updated pin-out
0-draft4	2013-05-21	- Update DVI - Adding Current consumption - Adding SHDN_N section - Update Mechanical drawings
0-draft5	2013-10-08	- Remove VRTC support - Section 2.2, update tolerance value - Section 3.1, remove VRTC and 2nd analog audio signals - Section 4.2, update PWRMON turn on to 100mSec - Section 4.3.2, update Hold Time min to 2.5 seconds - Section 4.3.3, update RESET control timing details - Section 5.1, update table - Section 6.5, update insertion Loss value - Section 8, remove USB Low speed support - Section 10, adding Analog Audio support. - Section 14.4, update table
1	2014-02-04	Initial 'official' Release - Added LE920-NV support - Added VRTC support - Added Section 2.6, sensitivity - Section 8, added note - Section 13.3, update figure - Section 14.3, update description
2	2014-04-02	General editorial update - Update 8, Firmware update - Update 14.5, Firmware update
3	2014-09-26	- Removed LE920-NV support - Section 8, update USB_VBUS notes - Section 15, update packing drawing and text
4	2015-03-19	- Add Section 10, Peripheral Ports☐ - Section 6.4, added note for diversity antenna connection☐ - Section 5.1, added additional CFUN=5 measurements☐ - Section 12, remove 'high voltage tolerate'☐ - Section 3.1, Update pinout☐ - Section 12.6 update ☐ - Section 15.3 update☐
5	2015-04-27	- Section 3.1, correct SPI_CS LGA pad - Section 3.1.1 update figure - Section 10.1, correct SPI_CS LGA pad - Added differences NAG and NA (removing name NAA) - Section 2.5, changed to 3 discrete figures

Reproduction forbidden without written authorization from Titan Automotive Solutions NV. - All Rights Reserved.

6	2015-06-25	- Section 3.1 correct pad F19 Function description
7	2015-09-21	- APPLICABILITY TABLE 1 – adding LE920-CN, LE920-NA AUTO S models. Added cs numbers per model. - Section 1.4 Document Organization links fixed. - Section 2.5 - Added cs numbers per model. - Added section 2.5.4 – LE920-CN model bands. - LE920-NA AUTO S added to section 2.5.3 - Section 2.6 - added sensitivity levels for TD-SCDMA & 4G TDD. - Section 3.1, 3.1.1, 15.4 – added ESIM_RST signal for LE920-NA AUTO S model. - Section 6.5 modified according to GPS active / passive antenna configuration changes. - Added section 15.3.2 – eSim schematic example. - Section 10.4 LE920-EUA changed to LE920-EU
8	2016-02-02	- Section 3.1, 3.11 – Pad V2 GPS_LNA_EN functionality declared to customer. Pads G2, J2, L2, F3, H3, K3, E4, and AN14 must be routed to TP for Titan debugging purpose. - Section 2.5.3 - Changing B17 support to B12. - Sections 6.1 , 6.4 – Adding B12 support to GSM/WCDMA/LTE & Diversity Antenna requirements. - Section 2.5.2 , 2.5.3 channels corrected for WCDMA B4. - Section 5.2.1.3 – Battery recommendations updated. - Section 15.1 – Recommended signals for debug updated. - Section 15.2 – Recommended USB_VBUS decupling capacitor value updated. - Section 15.4 – EMC recommendations updated.
9	2016-03-29	- Adding section 2.7 Conformity assessment issues
10	2018-03-04	- Section 4.3.4 – Added section for clarifying power down and power off procedures. - Section 5.1 – GPRS, EDGE slots corrected to 1TX+4RX
11	2019-11-21	- Telit logo and “Telit” name were replaced to Titan. - EOL variants were removed from HUG. - Section 2.7.1.5 - FCC ID and IC were updated from Telit to Titan.

Reproduction forbidden without written authorization from Titan Automotive Solutions NV. - All Rights Reserved.