LE940B6
HW User Guide

Rev.2.2 – 2020-01-10

Provided to Dekra under NDA
Distribution is Prohibited except for
Dekra employees with a Need to know

SPECIFICATIONS ARE SUBJECT TO CHANGE WITHOUT NOTICE

NOTICE

While reasonable efforts have been made to assure the accuracy of this document, Titan assumes no liability resulting from any inaccuracies or omissions in this document, or from use of the information obtained herein. The information in this document has been carefully checked and is believed to be reliable. However, no responsibility is assumed for inaccuracies or omissions. Titan reserves the right to make changes to any products described herein and reserves the right to revise this document and to make changes from time to time in content hereof with no obligation to notify any person of revisions or changes. Titan does not assume any liability arising out of the application or use of any product, software, or circuit described herein; neither does it convey license under its patent rights or the rights of others.

It is possible that this publication may contain references to, or information about Titan products (machines and programs), programming, or services that are not announced in your country. Such references or information must not be construed to mean that Titan intends to announce such Titan products, programming, or services in your country.

COPYRIGHTS

This instruction manual and the Titan products described in this instruction manual may be, include or describe copyrighted Titan material, such as computer programs stored in semiconductor memories or other media. Laws in the Italy and other countries preserve for Titan and its licensors certain exclusive rights for copyrighted material, including the exclusive right to copy, reproduce in any form, distribute and make derivative works of the copyrighted material. Accordingly, any copyrighted material of Titan and its licensors contained herein or in the Titan products described in this instruction manual may not be copied, reproduced, distributed, merged or modified in any manner without the express written permission of Titan. Furthermore, the purchase of Titan products shall not be deemed to grant either directly or by implication, estoppel, or otherwise, any license under the copyrights, patents or patent applications of Titan, as arises by operation of law in the sale of a product.

Provided to Dekra under NDA
Distribution is Prohibited except for
Dekra employees with a Need to know

COMPUTER SOFTWARE COPYRIGHTS

The Titan and 3rd Party supplied Software (SW) products described in this instruction manual may include copyrighted Titan and other 3rd Party supplied computer programs stored in semiconductor memories or other media. Laws in the Italy and other countries preserve for Titan and other 3rd Party supplied SW certain exclusive rights for copyrighted computer programs, including the exclusive right to copy or reproduce in any form the copyrighted computer program. Accordingly, any copyrighted Titan or other 3rd Party supplied SW computer programs contained in the Titan products described in this instruction manual may not be copied (reverse engineered) or reproduced in any manner without the express written permission of Titan or the 3rd Party SW supplier. Furthermore, the purchase of Titan products shall not be deemed to grant either directly or by implication, estoppel, or otherwise, any license under the copyrights, patents or patent applications of Titan or other 3rd Party supplied SW, except for the normal non-exclusive, royalty free license to use that arises by operation of law in the sale of a product.

USAGE AND DISCLOSURE RESTRICTIONS

I. License Agreements

The software described in this document is the property of Titan and its licensors. It is furnished by express license agreement only and may be used only in accordance with the terms of such an agreement.

II. Copyrighted Materials

Software and documentation are copyrighted materials. Making unauthorized copies is prohibited by law. No part of the software or documentation may be reproduced, transmitted, transcribed, stored in a retrieval system, or translated into any language or computer language, in any form or by any means, without prior written permission of Titan

III. High Risk Materials

Components, units, or third-party products used in the product described herein are NOT fault-tolerant and are NOT designed, manufactured, or intended for use as on-line control equipment in the following hazardous environments requiring fail-safe controls: the operation of Nuclear Facilities, Aircraft Navigation or Aircraft Communication Systems, Air Traffic Control, Life Support, or Weapons Systems (High Risk Activities"). Titan and its supplier(s) specifically disclaim any expressed or implied warranty of fitness for such High Risk Activities.

IV. Trademarks

The Titan logo is a registered trademark. All other product or service names are the property of their respective owners.

V. Third Party Rights

The software may include Third Party Right software. In this case you agree to comply with all terms and conditions imposed on you in respect of such separate software. In addition to Third Party Terms, the disclaimer of warranty and limitation of liability provisions in this License shall apply to the Third Party Right software.

Provided to Dekra under NDA
Distribution is Prohibited except for
Dekra employees with a Need to know

TITAN HEREBY DISCLAIMS ANY AND ALL WARRANTIES EXPRESS OR IMPLIED FROM ANY THIRD PARTIES REGARDING ANY SEPARATE FILES, ANY THIRD PARTY MATERIALS INCLUDED IN THE SOFTWARE, ANY THIRD PARTY MATERIALS FROM WHICH THE SOFTWARE IS DERIVED (COLLECTIVELY “OTHER CODE”), AND THE USE OF ANY OR ALL THE OTHER CODE IN CONNECTION WITH THE SOFTWARE, INCLUDING (WITHOUT LIMITATION) ANY WARRANTIES OF SATISFACTORY QUALITY OR FITNESS FOR A PARTICULAR PURPOSE.

NO THIRD PARTY LICENSORS OF OTHER CODE SHALL HAVE ANY LIABILITY FOR ANY DIRECT, INDIRECT, INCIDENTAL, SPECIAL, EXEMPLARY, OR CONSEQUENTIAL DAMAGES (INCLUDING WITHOUT LIMITATION LOST PROFITS), HOWEVER CAUSED AND WHETHER MADE UNDER CONTRACT, TORT OR OTHER LEGAL THEORY, ARISING IN ANY WAY OUT OF THE USE OR DISTRIBUTION OF THE OTHER CODE OR THE EXERCISE OF ANY RIGHTS GRANTED UNDER EITHER OR BOTH THIS LICENSE AND THE LEGAL TERMS APPLICABLE TO ANY SEPARATE FILES, EVEN IF ADVISED OF THE POSSIBILITY OF SUCH DAMAGES.

Provided to Dekra under NDA
Distribution is Prohibited except for
Dekra employees with a Need to know

APPLICABILITY TABLE

This documentation applies to the following products:

Table 1: Applicability Table

Module Name	Description
LE940B6-NA AUTO	North America regional variant (AT&T and T-Mobile)
LE940B6-NV AUTO	North America region variant (Verizon, AT&T and T-Mobile)
LE940B6-RW AUTO	Rest of World variant (Europe, APAC, Latin America and more)
LE940B6-CN AUTO	China variant

Provided to Dekra under NDA
Distribution is Prohibited except for
Dekra employees with a Need to know

CONTENTS

1. INTRODUCTION 10
1.1. Scope 10
1.2. Audience 10
1.3. Contact Information, Support 11
1.4. Text Conventions 11
1.5. Related Documents 12
1.6. Document Organization 12

2. PRODUCT DESCRIPTION 14
2.1. Overview 14
2.2. Applications 14
2.3. General Functionality and Main Features 15
2.4. Environmental Requirements 16
2.4.1. Temperature Range 16
2.4.2. RoHS Compliance 16
2.5. Operating Frequency Bands 17
2.5.1. RF Bands per Regional Variant 17
2.5.2. Reference Table of RF Bands Characteristics 18
2.6. Sensitivity 21
2.7. LE940B6 Mechanical Specifications 22
2.7.1. Dimensions 22
2.7.2. Weight 22

3. LE940B6 MODULE CONNECTIONS 23
3.1. Pin-out 23
3.2. LE940B6 Signals That Must Be Connected 40
3.3. LGA Pads Layout 42

4. ELECTRICAL SPECIFICATIONS 43
4.1. Absolute Maximum Ratings – Not Operational 43
4.2. Recommended Operating Conditions 43
4.3. Logic Level Specifications 44
4.3.1. 1.8V Standard GPIOs 44
4.3.2. 1.8V I2C Pads 44
4.3.3. 1.8V/2.9V SIM Pads 45
4.3.4. USB 45
4.3.5. 2.5V/3.3V EMAC Interface for RMII and RGMII 46

Provided to Dekra under NDA
Distribution is Prohibited except for
Dekra employees with a Need to know

5. HARDWARE COMMANDS 47
5.1. Turning on the LE940B6 Module 47
5.2. Initialization and Activation State 47
5.3. Turning off the LE940B6 Module 51
5.3.1. Shutdown by Software Command 52
5.3.2. Hardware Shutdown 53
5.3.3. Unconditional Hardware Reset (RESET_N) 54
5.3.4. Unconditional Hardware Shutdown 55

6. POWER SUPPLY 57
6.1. Power Supply Requirements 57
6.2. General Design Rules 60
6.2.1. Electrical Design Guidelines 60
6.2.1.1. + 5V Input Source Power Supply – Design Guidelines 60
6.2.1.2. + 12V Input Source Power Supply – Design Guidelines 61
6.2.1.3. Battery Source Power Supply – Design Guidelines 63
6.2.2. Thermal Design Guidelines 63
6.2.3. Power Supply PCB Layout Guidelines 64

7. ANTENNA(S) 66
7.1. GSM/WCDMA/TD-SCDMA/LTE Antenna Requirements 66
7.2. GSM/WCDMA/TD-SCDMA/LTE Antenna – PCB Line Guidelines 66
7.3. GSM/WCDMA/TD-SCDMA/LTE Antenna – Installation Guidelines 67
7.4. Secondary Antenna Requirements 68
7.5. PCB Guidelines in Case of FCC Certification 68
7.5.1. Transmission Line Design 68
7.5.2. Transmission Line Measurements 69

8. HARDWARE INTERFACES 71
8.1. USB Port 72
8.2. Serial Ports 74
8.2.1. Modem Serial Port 1 74
8.2.2. Modem Serial Port 2 75
8.2.3. Modem Serial Port 3 76
8.2.4. RS232 Level Translation 77
8.3. Peripheral Ports 79
8.3.1. SPI – Serial Peripheral Interface 79
8.3.2. I2C - Inter-integrated Circuit 80
8.4. Ethernet Interface 80
8.5. Audio Interface 82

Provided to Dekra under NDA
Distribution is Prohibited except for
Dekra employees with a Need to know

8.5.1. Analog Audio 82
8.5.2. Digital Audio 82
8.6. General Purpose I/O 83
8.6.1. Using a GPIO Pad as Input 84
8.6.2. Using a GPIO Pad as Output 84

9. MISCELLANEOUS FUNCTIONS 85
9.1. Indication of Network Service Availability 85
9.2. RTC – Real Time Clock 85
9.3. VAUX Power Output 86
9.4. ADC Converter 86
9.4.1. Description 86
9.4.2. Using the ADC Converter 86
9.5. Using the Temperature Monitor Function 86
9.6. Fuel Gauge (TBD) 87
9.7. eFuse 87

10. MOUNTING THE MODULE ON YOUR BOARD 88
10.1. General 88
10.2. Finishing & Dimensions 88
10.3. Recommended Footprint for the Application 89
10.4. Stencil 90
10.5. PCB Pad Design 90
10.6. Recommendations for PCB Pad Dimensions (mm) 91
10.7. Solder Paste 92
10.7.1. Solder Reflow 92

11. APPLICATION GUIDE 94
11.1. Debug of the LE940B6 Module in Production 94
11.2. Bypass Capacitor on Power Supplies 95
11.3. SIM Interface 96
11.3.1. SIM Schematic Example 96
11.4. EMC Recommendations 97
11.5. Download and Debug Port 97
11.6. Antenna Detection 98

12. PACKING SYSTEM 99
12.1. Tray Drawing 101
12.2. Moisture Sensitivity 101

13. CONFORMITY ASSESSMENT ISSUES 102

Provided to Dekra under NDA
Distribution is Prohibited except for
Dekra employees with a Need to know

13.1. FCC/IC Regulatory Notices 102
13.2. RED Regulatory Notices 104

14. SAFETY RECOMMENDATIONS 106

15. ACRONYMS 107

16. DOCUMENT HISTORY 109

Provided to Dekra under NDA
Distribution is Prohibited except for
Dekra employees with a Need to know

1. Introduction

1.1. Scope

This document introduces the Titan LE940B6 module and presents possible and recommended hardware solutions for developing a product based on the LE940B6 module. All the features and solutions detailed in this document are applicable to all LE940B6 variants, where “LE940B6” refers to the variants listed in the applicability table.

If a specific feature is applicable to a specific product only, it will be clearly marked.

NOTE:
LE940B6 refers to all modules listed in the Applicability Table.

This document takes into account all the basic functions of a wireless module; suggests a valid hardware solution for each function, and points out incorrect solutions and common errors to be avoided.

Obviously, this document cannot embrace every hardware solution or every product that can be designed. Obviously, avoiding invalid solutions must be considered mandatory. Where the suggested hardware configurations need not be considered mandatory, the information given should be used as a guide and a starting point for properly developing your product with the LE940B6 module.

NOTE:
The integration of the GSM/GPRS/EGPRS/WCDMA/HSPA+/LTE LE940B6 cellular module within a user application must be done according to the design rules described in this manual.

1.2. Audience

This document is intended for Titan customers, especially system integrators, about to implement their applications using the LE940B6 module.

Provided to Dekra Under NDA
Distribution is Prohibited except for
Dekra employees with a Need to know

1.3. Contact Information, Support

For general contact, technical support, to report documentation errors and to order manuals, contact Titan Technical Support via Team forge CollabNet.

https://ctf.tustitan.com/

Alternatively, get in touch with your usual Titan contact.

For more information about Titan visit:

http://www.tustitan.com

To register for product news and announcements or for product questions contact Titan Technical Support. Our aim is to make this guide as helpful as possible. Keep us informed of your comments and suggestions for improvements.

Titan appreciates feedback from the users of our information.

1.4. Text Conventions

The following conventions are used to emphasize specific types of information:

DANGER:
Danger – This information MUST be followed or catastrophic equipment failure or bodily injury may occur.

WARNING:
Caution or Warning – Alerts the user to important points about integrating the module, if these points are not followed, the module and end user equipment may fail or malfunction.

NOTE:
Tip or Information – Provides advice and suggestions that may be useful when integrating the module.

All dates are in ISO 8601 format, i.e. YYYY-MM-DD.

Provided to Dekra under NDA
Distribution is Prohibited except for
Dekra employees with a Need to know

1.5. Related Documents

Table 2: Related Documents

Document Title	Document Number
Ref 1: LE940B6 AT Command Reference Guide	80514ST10767A
Ref 2: LE940B6 SW User Guide	1VV0301296
Ref 3: Titan EVK2 User Guide	1vv0300704
Ref 4: SIM Integration Design Guide	80000NT10001A
Ref 5: Titan - Antenna Detection Application Note	80000NT10002a

1.6. Document Organization

This document contains the following chapters:

Table 3: Document Structure

Chapter#	Chapter Title	Description
1	Introduction	Provides the scope of this document, target audience, contact and support information, and text conventions
2	Product Description	An overview of the product features
3	LE940B6 Module Connections	Pinout configuration and layout
4	Electrical Specifications	Specifies electrical values of logic levels for this module
5	Hardware Commands	Instructs how to control the module via hardware
6	Power Supply	Supply lines and current consumption
7	Antenna(s)	Describes the antenna connections and related aspects of board layout design, which are most critical for the overall product design
8	Hardware Interfaces	Specifies the peripheral and audio interfaces
9	Miscellaneous Functions	
10	Mounting the Module on your Board	

Provided to Dekra Under NDA
Distribution is Prohibited except for
Dekra employees with Need to Know

Chapter#	Chapter Title	Description
11	Application Guide	
12	Packing System	
13	Conformity Assessment Issues	
14	Safety Recommendations	
15	Acronyms16	
16	Document History	

Provided to Dekra under NDA
Distribution is Prohibited except for
Dekra employees with a Need to know

2. Product Description

2.1. Overview

LE940B6 is Titan's platform for automotive telematics on-board units (OBU's) for applications, such as automotive telematics and eCall, based on the following technologies:

- 4G cellular for voice and data communication
- GNSS (optional) - GPS, GLONASS, BeiDou, Galileo, QZSS, for positioning service
- Embedded security
- Designed for automotive markets[1] quality needs

In its most basic use case, LE940B6 can be applied as a wireless communication front-end for telematics products, offering GNSS and mobile communication features to an external host CPU through its rich interfaces.

LE940B6 can further support customer software applications and security features. LE940B6 is based on a Yocto Linux system running on an application processor. Thanks to a dedicated application processor and embedded security resources, product developers and manufacturers can create products that guarantee fraud prevention and tamper evidence without extra effort for additional security precautions.

LE940B6 can be self-sufficient and serve as a fully-integrated solution for applications, such as location-based cellular telematics, navigation, road pricing and eCall. In such a case, the customer would simply complement the module with a power supply, speaker amplifier, microphone, antennas, and an HMI (if applicable).

LE940B6 is offered with different regional variants according to the list in Table 1: Applicability Table.

2.2. Applications

LE940B6 can be used for telematics applications where tamper-resistance, confidentiality, integrity, and authenticity of end-user information are required, for example:

- Emergency call
- Telematics services
- Road pricing
- Pay-as-you-drive insurance
- Stolen vehicles tracking
- Internet connectivity

Provided to Dekra under NDA
Distribution is prohibited except for
Dekra employees with a Need to know

[1] In accordance with Titan's Robustness Validation, using AEC-Q100-defined qualification tests

2.3. General Functionality and Main Features

The LE940B6 family of automotive cellular modules features an LTE and multi-RAT modem together with a powerful on-chip application processor and a rich set of interfaces.

The major functions and features are listed below:

- Multi-RAT with LTE carrier aggregation (Rel. 10, Cat. 6)
- Flash + DDR large enough to allow the space for customer's own software applications
- Advanced security features
- FOTA (optional)
- Several region variants with optimal choice of RF bands in each for worldwide coverage of countries and MNOs
- Well-designed form factor (40x40mm), accommodating the multiple RF bands in each region variant
- Digital audio and analog audio codec
- A GNSS function is not included within the module, but can be supported with the proper interface while mounted on the customer board
- The entire module is designed by Titan for satisfying the environment and quality requirements of the automotive market

Figure 1 shows the high-level functionality of the LE940B6 module.

Figure 1: LE940B6 High-level Functionality

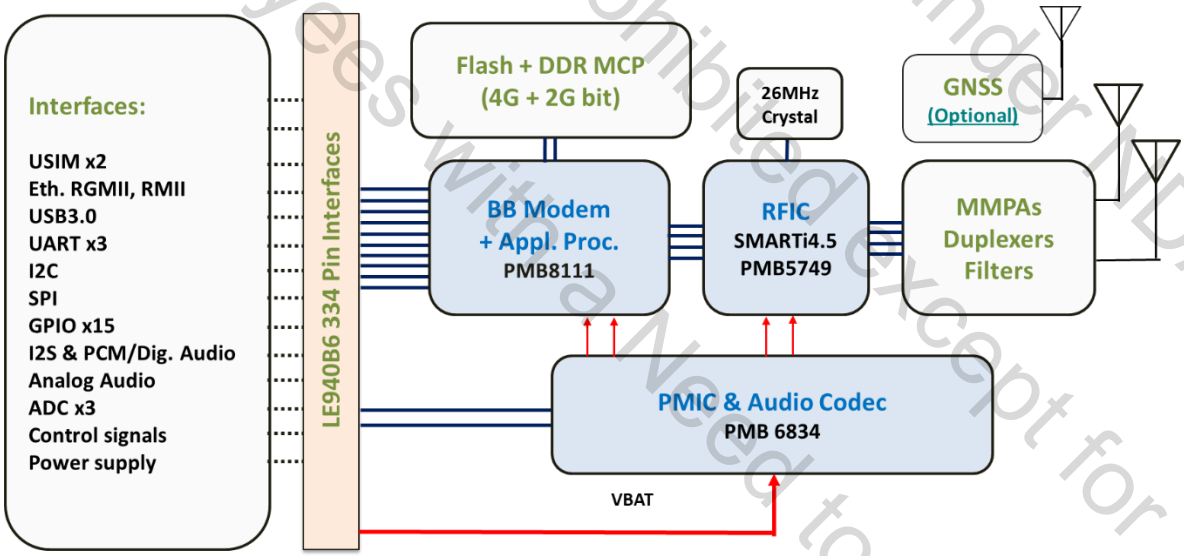

Provided to Dekra under NDA
Distribution is Prohibited except for
Dekra employees with a Need to know

2.4. Environmental Requirements

2.4.1. Temperature Range

Operating temperature range	-20 ~ +55°C. This range is defined by 3GPP (the global standard for wireless mobile communication). Titan guarantees its modules to comply with all the 3GPP requirements and to have full functionality of the module with in this range.
	-40 ~ +85°C. Titan guarantees full functionality within this range as well. However, there may possibly be some performance deviations in this extended range relative to 3GPP requirements, which means that some RF parameters may deviate from the 3GPP specification in the order of a few dB. For example: receiver sensitivity or maximum output power may be slightly degraded. Even so, all the functionalities, such as call connection, SMS, USB communication, UART activation etc., will be maintained, and the effect of such degradations will not lead to malfunction.
	–40°C ~ +95°C. eCall must be functional (until the module is broken)
Storage and non-operating temperature range	–40°C ~ +95°C

2.4.2. RoHS Compliance

As a part of the Titan corporate policy of environmental protection, the LE940B6 complies with the RoHS (Restriction of Hazardous Substances) directive of the European Union (EU directive 2011/65/EU).

Provided to Dekra under NDA
Distribution is Prohibited except for
Dekra employees with a Need to know

2.5. Operating Frequency Bands

The operating frequencies in WCDMA and LTE modes conform to the 3GPP specifications.

2.5.1. RF Bands per Regional Variant

Table 4 summarizes all region variants within the LE940B6 family, showing the supported band sets in each variant and the supported band pairs for 2x carrier aggregation.

Table 4: RF Bands per Regional Variant

Region Variant	LTE FDD	LTE TDD	HSPA+	TD-SCDMA	2G
LE940B6-NA	2, 4, 5, 7, 12, 29(DL)	-	2, 4, 5	-	2, 5
	LTE Carrier Aggregation	2+5, 2+12, 2+29, 4+4, 4+5, 4+12, 4+29			
LE940B6-NV	2, 4, 5, 7, 12, 13, 29(DL)	-	2, 4, 5	-	2, 5
	LTE Carrier Aggregation	2+5, 2+12, 2+13, 2+29, 4+4, 4+5, 4+12, 4+13, 4+29,			
LE940B6-RW	1, 2, 3, 4, 5, 7, 8, 19, 20, 21, 26, 28, 32(DL)	-	1, 2, 3, 4, 5, 6, 8, 19	-	2, 3, 5, 8
	LTE Carrier Aggregation	1+5, 1+8, 1+19, 1+21, 1+26, 2+5, 3+3, 3+5, 3+7, 3+8, 3+19, 3+20, 3+26, 3+28, 4+4, 4+5, 5+7, 7+8, 7+20, 7+28, 19+21, 20+32			
LE940B6-CN	1, 3, 5, 8, 26	38, 39, 40, 41M	1, 3, 5, 8	34, 39	3, 8
	LTE Carrier Aggregation	1+5, 1+26, 3+3, 3+5, 3+8, 3+26, 39+41, 40+40, 41+41			

Band 41M for China: 2,555 - 2,655 MHz

Provided to Dekra under NDA
Distribution is prohibited except for
Dekra employees with a Need to know

2.5.2. Reference Table of RF Bands Characteristics

Table 5: RF Bands Characteristics

Mode	Freq. Tx (MHz)	Freq. Rx (MHz)	Channels	Tx-Rx Offset
PCS 1900	1850.2 ~ 1909.8	1930.2 ~ 1989.8	512 ~ 810	80 MHz
DCS 1800	1710.2 ~ 1784.8	1805.2 ~ 1879.8	512 ~ 885	95 MHz
GSM 850	824.2 ~ 848.8	869.2 ~ 893.8	128 ~ 251	45 MHz
EGSM 900	880.2 ~ 914.8	925.2 ~ 959.8	975 ~ 1023, 1 ~ 124	45 MHz
WCDMA 2100 – B1	1920 ~ 1980	2110 ~ 2170	Tx: 9612 ~ 9888 Rx: 10562 ~ 10838	190 MHz
WCDMA 1900 – B2	1850 ~ 1910	1930 ~ 1990	Tx: 9262 ~ 9538 Rx: 9662 ~ 9938	80 MHz
WCDMA 1800 – B3	1710 ~ 1785	1805 ~ 1880	Tx: 937 ~ 1288 Rx: 1162 ~ 1513	95 MHz
WCDMA AWS – B4	1710 ~ 1755	2110 ~ 2155	Tx: 1312 ~ 1513 Rx: 1537 ~ 1738	400 MHz
WCDMA 850 – B5	824 ~ 849	869 ~ 894	Tx: 4132 ~ 4233 Rx: 4357 ~ 4458	45 MHz
WCDMA 800 – B6	830 ~ 840	875 ~ 885	Tx: 4162 ~ 4188 Rx: 4387 ~ 4413	45 MHz
WCDMA 900 – B8	880 ~ 915	925 ~ 960	Tx: 2712 ~ 2863 Rx: 2937 ~ 3088	45 MHz
WCDMA 1800 – B9	1750 ~ 1784.8	1845 ~ 1879.8	Tx: 8762 ~ 8912 Rx: 9237 ~ 9387	95 MHz
WCDMA 800 – B19	830 ~ 845	875 ~ 890	Tx: 312 ~ 363 Rx: 712 ~ 763	45 MHz

Provided to Dekra under NDA
Distribution is Prohibited except for
Dekra employees with a Need to know

Mode	Freq. Tx (MHz)	Freq. Rx (MHz)	Channels	Tx-Rx Offset
TDSCDMA 2000 – B34	2010 ~ 2025	2010 ~ 2025	Tx: 10050 ~ 10125 Rx: 10050 ~ 10125	0 MHz
TDSCDMA 1900 – B39	1880 ~ 1920	1880 ~ 1920	Tx: 9400 ~ 9600 Rx: 9400 ~ 9600	0 MHz
LTE 2100 – B1	1920 ~ 1980	2110 ~ 2170	Tx: 18000 ~ 18599 Rx: 0 ~ 599	190 MHz
LTE 1900 – B2	1850 ~ 1910	1930 ~ 1990	Tx: 18600 ~ 19199 Rx: 600 ~ 1199	80 MHz
LTE 1800 – B3	1710 ~ 1785	1805 ~ 1880	Tx: 19200 ~ 19949 Rx: 1200 ~ 1949	95 MHz
LTE AWS – B4	1710 ~ 1755	2110 ~ 2155	Tx: 19950 ~ 20399 Rx: 1950 ~ 2399	400 MHz
LTE 850 – B5	824 ~ 849	869 ~ 894	Tx: 20400 ~ 20649 Rx: 2400 ~ 2649	45 MHz
LTE 2600 – B7	2500 ~ 2570	2620 ~ 2690	Tx: 20750 ~ 21449 Rx: 2750 ~ 3449	120 MHz
LTE 900 – B8	880 ~ 915	925 ~ 960	Tx: 21450 ~ 21799 Rx: 3450 ~ 3799	45 MHz
LTE 1800 – B9	1749.9 ~ 1784.9	1844.9 ~ 1879.9	Tx: 21800 ~ 2149 Rx: 3800 ~ 4149	95 MHz
LTE AWS+ – B10	1710 ~ 1770	2110 ~ 2170	Tx: 22150 ~ 22749 Rx: 4150 ~ 4749	400 MHz

Provided to Dekra under NDA
Distribution is Prohibited except for
Dekra employees with a Need to Know

Mode	Freq. Tx (MHz)	Freq. Rx (MHz)	Channels	Tx-Rx Offset
LTE 700a – B12	699 ~ 716	729 ~ 746	Tx : 23010 ~ 23179 Rx : 5010 ~ 5179	30 MHz
LTE 700c – B13	777 ~ 787	746 ~ 756	Tx : 23180 ~ 23279 Rx : 5180 ~ 5279	-31 MHz
LTE 700b – B17	704 ~ 716	734 ~ 746	Tx: 23730 ~ 23849 Rx: 5730 ~ 5849	30 MHz
LTE 800 – B19	830 ~ 845	875 ~ 890	Tx: 24000 ~ 24149 Rx: 6000 ~ 6149	45 MHz
LTE 800 – B20	832 ~ 862	791 ~ 821	Tx: 24150 ~ 24449 Rx: 6150 ~ 6449	-41 MHz
LTE 1500 – B21	1447.9 ~ 1462.9	1495.9 ~ 1510.9	Tx: 24450 ~ 24599 Rx: 6450 ~ 6599	48 MHz
LTE 850+ – B26	814 ~ 849	859 ~ 894	Tx: 26690 ~ 27039 Rx: 8690 ~ 9039	45 MHz
LTE 700 – B28	703 ~ 748	758 ~ 803	Tx : 27210 ~ 27659 Rx : 9210 ~ 9659	45 MHz
LTE 700d – B29	Downlink only	717 ~ 728	Rx: 9660 ~ 9769	0 MHz
LTE 1500 – B32	Downlink only	1452 ~ 1496	Rx: 9920 ~ 10359	0 MHz
LTE TDD 2600 – B38	2570 ~ 2620	2570 ~ 2620	Tx: 37750 ~ 38249 Rx: 37750 ~ 38249	0 MHz

Provided to Dekra under NDA
Distribution is Prohibited except for
Dekra employees with a Need to Know

Mode	Freq. Tx (MHz)	Freq. Rx (MHz)	Channels	Tx-Rx Offset
LTE TDD 1900 – B39	1880 ~ 1920	1880 ~ 1920	Tx: 38250 ~ 38649 Rx: 38250 ~ 38649	0 MHz
LTE TDD 2300 – B40	2300 ~ 2400	2300 ~ 2400	Tx: 38650 ~ 39649 Rx: 38650 ~ 39649	0 MHz
LTE TDD 2500 – B41	2496 ~ 2690	2496 ~ 2690	Tx: 39650 ~ 41589 Rx: 39650 ~ 41589	0 MHz

2.6. Sensitivity

LE940B6 maximum sensitivity levels are as follows (exact performance figures will be specified at a later stage):

- < 3GPP @ 2G
- < 3GPP @ 3G
- < 3GPP @ 4G FDD (BW=5 MHz)
- < 3GPP @ 4G TDD (BW=5 MHz)

Provided to Dekra under NDA
Distribution is Prohibited except for
Dekra employees with a Need to know

2.7. LE940B6 Mechanical Specifications

2.7.1. Dimensions

The LE940B6 module's overall dimensions are:

- Length: 40 mm, +/- 0.20 mm tolerance
- Width: 40 mm, +/- 0.20 mm tolerance
- Thickness: 3.0 mm, +/- 0.15 mm tolerance (with label)

2.7.2. Weight

The nominal weight of the LE940B6 module is 11 gram.

Provided to Dekra under NDA
Distribution is Prohibited except for
Dekra employees with a Need to know

3. LE940B6 Module Connections

3.1. Pin-out

Table 6: LE940B6 Pin-out

Pad	Signal	I/O	Function	Type	Comment
USB HS 2.0 Communication Port					
A18	USB_VBUS	AI	Power sense for the internal USB transceiver		
D19	USB_D+	I/O	USB differential data (+)		
F19	USB_D-	I/O	USB differential data (-)		
Asynchronous UART					
AH19	C103/TXD	I	Serial data input (TXD) from DTE	1.8V	
AF19	C104/RXD	O	Serial data output (RXD) to DTE	1.8V	
AA18	C105/RTS	I	Input for Request To Send signal (RTS) from DTE	1.8V	
AK19	C106/CTS	O	Output for Clear To Send signal (CTS) to DTE	1.8V	
AG18	C107/DSR	O	Output for Data Set Ready signal (DSR) to DTE	1.8V	
AC18	C108/DTR	I	Input for Data Terminal Ready signal (DTR) from DTE	1.8V	
AE18	C109/DCD	O	Output for Data Carrier Detect signal (DCD) to DTE	1.8V	
AJ18	C125/RING	O	Output for Ring Indicator signal (RI) to DTE	1.8V	
Asynchronous Auxiliary UART					
AB19	TXD_AUX	O	Auxiliary UART (Tx Data to DTE)	1.8V	

Provided to Dekra under NDA
Distribution is Prohibited except for
Dekra employees with a Need to know

Pad	Signal	I/O	Function	Type	Comment
AD19	RXD_AUX	I	Auxiliary UART (Rx Data from DTE)	1.8V	
Asynchronous UART3					
AM9	UART3_TXD	I	Serial data input (TXD) from DTE	1.8V	
AM11	UART3_RXD	O	Serial data output (RXD) to DTE	1.8V	
AM13	UART3_RTS	I	Input for Request To Send (RTS) from DTE	1.8V	
AM15	UART3_CTS	O	Output for Clear To Send (CTS) to DTE	1.8V	
JTAG – Joint Test Action Group					
E4	JTAG_TDI	I	JTAG_TDI	1.8V	
F3	JTAG_RESOUT_N	O	JTAG_RESOUT*	1.8V	
F5	JTAG_TRIGOUT	-	JTAG_TRIGOUT	1.8V	
G2	JTAG_RTCK	O	JTAG_RTCK	1.8V	
H3	JTAG_TCK	I	JTAG_TCK	1.8V	
J2	JTAG_TRST_N	I	JTAG_TRST*	1.8V	
K3	JTAG_TDO	O	JTAG_TDO	1.8V	
L2	JTAG_TMS	I	JTAG_TMS	1.8V	
M3	JTAG_TRIGIN	-	JTAG_TRIGIN	1.8V	
JTAG - MiPi 34 Interface					
L4	JTAG_PTI_CLK	O	MiPi Clock	1.8V	
N4	JTAG_PTI_DATA 0	I/O	MiPi Data 0	1.8V	
R4	JTAG_PTI_DATA 1	I/O	MiPi Data 1	1.8V	

Provided to Dekra Under NDA
Distribution is Prohibited except for
Dekra employees with a Need to know

Pad	Signal	I/O	Function	Type	Comment
T4	JTAG_PTI_DATA 2	I/O	MiPi Data 2	1.8V	
V4	JTAG_PTI_DATA 3	I/O	MiPi Data 3	1.8V	
SIM Card Interface					
A8	SIMVCC1	-	External SIM signal – Power supply for the SIM	1.8/2.9 V	
A10	SIMCLK1	O	External SIM signal – Clock	1.8/2.9 V	
B7	SIMIN1	I	External SIM signal – Presence	1.8V	Active Low
B9	SIMIO1	I/O	External SIM signal – Data I/O	1.8/2.9 V	
B11	SIMRST1	O	External SIM signal – Reset	1.8/2.9 V	
SIM Card Interface 2					
D15	SIMVCC2	-	External SIM signal – Power supply for the SIM	1.8/2.9 V	
C16	SIMCLK2	O	External SIM signal – Clock	1.8/2.9 V	
C18	SIMIN2	I	External SIM signal – Presence (active low)	1.8V	Active Low
E16	SIMIO2	I/O	External SIM signal – Data I/O	1.8/2.9 V	
D17	SIMRST2	O	External SIM signal – Reset	1.8/2.9 V	
Analog Audio Interface					
B5	EAR1_MT+	A O	Earphone signal output, phase +		

Provided to Dekra under NDA
Distribution is Prohibited except for
Dekra employees with a Need to Know

Pad	Signal	I/O	Function	Type	Comment
A4	EAR1_MT-	A O	Earphone signal output, phase -		
B3	MIC1_MT+	AI	Microphone input, phase +		
A2	MIC1_MT-	AI	Microphone input, phase -		
G6	MIC_BIAS	A O	Microphone Bias	Power	
Digital Voice Interface (DVI)					
C8	DVI_RX	I	Digital Voice interface (Rx)	1.8V	
C10	DVI_CLK	O	Digital Voice interface (CLK master output)	1.8V	
D9	DVI_TX	O	Digital Voice interface (Tx)	1.8V	
D11	DVI_WA0	O	Digital Voice interface (WA0 master output)	1.8V	
SPI – Serial Peripheral Interface					
K19	SPI_MOSI	O	SPI data Master output Slave input	1.8V	
M19	SPI_MISO	I	SPI data Master input Slave output	1.8V	
N18	SPI_CS	O	SPI Chip select output	1.8V	
P19	SPI_CLK	O	SPI Clock output	1.8V	
I2C Interface					
C14	I2C_SCL	I/O	I2C Clock	1.8V	
D13	I2C_SDA	I/O	I2C Data	1.8V	
Digital I/O					
F9	GPIO_01	I/O	GPIO_01	1.8V	
E10	GPIO_02	I/O	GPIO_02	1.8V	
F11	GPIO_03	I/O	GPIO_03	1.8V	

Provided to Dekra under NDA
Distribution is Prohibited except for
Dekra employees with a Need to know

Pad	Signal	I/O	Function	Type	Comment
E12	GPIO_04	I/O	GPIO_04	1.8V	
F13	GPIO_05	I/O	GPIO_05	1.8V	
E14	GPIO_06	I/O	GPIO_06	1.8V	
R18	GPIO_07	I/O	GPIO_07	1.8V	
S19	GPIO_08	I/O	GPIO_08	1.8V	
U19	GPIO_09	I/O	GPIO_09	1.8V	
W19	GPIO_10	I/O	GPIO_10	1.8V	
L18	GPIO_11	I/O	GPIO_11	1.8V	
J18	GPIO_12	I/O	GPIO_12	1.8V	
AN4	GPIO_20	I/O	GPIO_20	1.8V	
H1	GPIO_21	I/O	GPIO_21	1.8V	
K1	GPIO_22	I/O	GPIO_22	1.8V	
Analog to Digital Converter					
D5	ADC_IN1	AI	Analog to Digital Converter Input 1	Analog	
E6	ADC_IN2	AI	Analog to Digital Converter Input 2	Analog	
F7	ADC_IN3	AI	Analog to Digital Converter Input 3	Analog	
Ethernet MAC/PHY Signals					
G14	MAC_MDC	O	Management Data Clock	2.5/3.3 V	
G12	MAC_MDIO	I/O	Management Data I/O	2.5/3.3 V	
V16	MAC_TXD[0]	O	RGMII or RMII TXD[0]	2.5/3.3 V	

Provided to Dekra under NDA
Distribution is Prohibited except for
Dekra employees with a Need to know

Pad	Signal	I/O	Function	Type	Comment
T16	MAC_TXD[1]	O	RGMII or RMII TXD[1]	2.5/3.3 V	
R16	MAC_TXD[2]	O	RGMII TXD[2]	2.5/3.3 V	
N16	MAC_TXD[3]	O	RGMII TXD[3]	2.5/3.3 V	
L16	MAC_GTX_CLK	O	RGMII Transmit Clock	2.5/3.3 V	
G16	MAC_TXEN_ER	O	RGMII Transmit Enable / Error or RMII Transmit Enable	2.5/3.3 V	
AL16	MAC_RXD[0]	I	RGMII or RMII RXD[0]	2.5/3.3 V	
AJ16	MAC_RXD[1]	I	RGMII or RMII RXD[1]	2.5/3.3 V	
AG16	MAC_RXD[2]	I	RGMII RXD[2]	2.5/3.3 V	
AE16	MAC_RXD[3]	I	RGMII RXD[3]	2.5/3.3 V	
AC16	MAC_RX_CLK	I	RGMII Receive Clock	2.5/3.3 V	
X16	MAC_RXDV_ER	I	RGMII Receive Data Available/Error or RMII Receive Error	2.5/3.3 V	
G10	ETH_INT_N	I	Ethernet PHY Interrupt	2.5/3.3 V	
G8	ETH_RST_N	O	Ethernet PHY Reset Output	2.5/3.3 V	
RF Section					
AD1	ANT_1	I/O	Primary Antenna 1	RF	
AU9	ANT_DIV_1	I	Diversity Antenna 1	RF	

Provided to Dekra under NDA
Distribution is Prohibited except for
Dekra employees with a Need to Know

Pad	Signal	I/O	Function	Type	Comment
S1	ANT_GPS	I	GPS Antenna	RF	
Miscellaneous Functions					
F17	VRTC	AI	VRTC Backup capacitor	-	
K17	VIO_1.8V	O	VIO_1.8V for reference voltage	1.8V	
AN8	RESET_N	I	Reset Input		Active low
AN10	SW_RDY	O	Indicates that the boot sequence completed successfully	1.8V	
AN12	SHDN_N	I	Unconditional Shutdown Input		Active low
AS1	ON_OFF_N	I	Power ON/OFF Input		Active low
AU3	STAT_LED	O	Status Indicator LED	1.8V	
P17	VAUX/PWRMON	O	Supply output for external accessories / Power ON Monitor	1.8V	
H17	VPP	I	VPP for eFuse		
Power Supply					
AP17	VBATT	-	Main Power Supply (Digital Section)	Power	
AP19	VBATT	-	Main Power Supply (Digital Section)	Power	
AR18	VBATT	-	Main Power Supply (Digital Section)	Power	
AR20	VBATT	-	Main Power Supply (Digital Section)	Power	
AS17	VBATT_PA	-	Main Power Supply (RF Transmit Power Section)	Power	
AS19	VBATT_PA	-	Main Power Supply (RF Transmit Power Section)	Power	

Provided to Dekra under NDA
Distribution is Prohibited except for
Dekra employees with a Need to Know

Pad	Signal	I/O	Function	Type	Comment
AT18	VBATT_PA	-	Main Power Supply (RF Transmit Power Section)	Power	
AU17	VBATT_PA	-	Main Power Supply (RF Transmit Power Section)	Power	
AU19	VBATT_PA	-	Main Power Supply (RF Transmit Power Section)	Power	
AT20	VBATT_PA	-	Main Power Supply (RF Transmit Power Section)	Power	
Ground					
A6	GND	-	Ground	Ground	
A12	GND	-	Ground	Ground	
B13	GND	-	Ground	Ground	
B15	GND	-	Ground	Ground	
B17	GND	-	Ground	Ground	
C4	GND	-	Ground	Ground	
C6	GND	-	Ground	Ground	
D3	GND	-	Ground	Ground	
D7	GND	-	Ground	Ground	
E18	GND	-	Ground	Ground	
F1	GND	-	Ground	Ground	
G18	GND	-	Ground	Ground	
H19	GND	-	Ground	Ground	
M1	GND	-	Ground	Ground	
N2	GND	-	Ground	Ground	
P1	GND	-	Ground	Ground	
P3	GND	-	Ground	Ground	

Provided to Dekra under NDA
Distribution is Prohibited except for
Dekra employees with a Need to Know

Pad	Signal	I/O	Function	Type	Comment
R2	GND	-	Ground	Ground	
T2	GND	-	Ground	Ground	
T18	GND	-	Ground	Ground	
U1	GND	-	Ground	Ground	
V18	GND	-	Ground	Ground	
W1	GND	-	Ground	Ground	
X2	GND	-	Ground	Ground	
X18	GND	-	Ground	Ground	
Y1	GND	-	Ground	Ground	
Y19	GND	-	Ground	Ground	
AA2	GND	-	Ground	Ground	
AB1	GND	-	Ground	Ground	
AC2	GND	-	Ground	Ground	
AE2	GND	-	Ground	Ground	
AF1	GND	-	Ground	Ground	
AG2	GND	-	Ground	Ground	
AH1	GND	-	Ground	Ground	
AJ2	GND	-	Ground	Ground	
AK1	GND	-	Ground	Ground	
AK17	GND	-	Ground	Ground	
AL18	GND	-	Ground	Ground	
AM17	GND	-	Ground	Ground	
AM19	GND	-	Ground	Ground	
AN16	GND	-	Ground	Ground	

Provided to Dekra under NDA
Distribution is Prohibited except for
Dekra employees with a Need to know

Pad	Signal	I/O	Function	Type	Comment
AN18	GND	-	Ground	Ground	
AP3	GND	-	Ground	Ground	
AP5	GND	-	Ground	Ground	
AP7	GND	-	Ground	Ground	
AP9	GND	-	Ground	Ground	
AP11	GND	-	Ground	Ground	
AP13	GND	-	Ground	Ground	
AP15	GND	-	Ground	Ground	
AR2	GND	-	Ground	Ground	
AR4	GND	-	Ground	Ground	
AR6	GND	-	Ground	Ground	
AR8	GND	-	Ground	Ground	
AR10	GND	-	Ground	Ground	
AR12	GND	-	Ground	Ground	
AR14	GND	-	Ground	Ground	
AR16	GND	-	Ground	Ground	
AS5	GND	-	Ground	Ground	
AS7	GND	-	Ground	Ground	
AS9	GND	-	Ground	Ground	
AS11	GND	-	Ground	Ground	
AS13	GND	-	Ground	Ground	
AS15	GND	-	Ground	Ground	
AT4	GND	-	Ground	Ground	
AT6	GND	-	Ground	Ground	

Provided to Dekra under NDA
Distribution is Prohibited except for
Dekra employees with a Need to know

Pad	Signal	I/O	Function	Type	Comment
AT8	GND	-	Ground	Ground	
AT10	GND	-	Ground	Ground	
AT12	GND	-	Ground	Ground	
AT14	GND	-	Ground	Ground	
AT16	GND	-	Ground	Ground	
AU1	GND	-	Ground	Ground	
AU5	GND	-	Ground	Ground	
AU7	GND	-	Ground	Ground	
AU11	GND	-	Ground	Ground	
AU15	GND	-	Ground	Ground	
AL2	GND	-	Ground	Ground	
AN2	GND	-	Ground	Ground	
L20	GND	-	Ground	Ground	
N20	GND	-	Ground	Ground	
ZZ19	GND	-	Ground	Ground	
A20	GND	-	Ground	Ground	
AV20	GND	-	Ground	Ground	
ZZ1	GND	-	Ground	Ground	
A0	GND	-	Ground	Ground	
AV0	GND	-	Ground	Ground	
N0	GND	-	Ground	Ground	
R0	GND	-	Ground	Ground	
T0	GND	-	Ground	Ground	
V0	GND	-	Ground	Ground	

Provided to Dekra under NDA
Distribution is Prohibited except for
Dekra employees with a Need to know

Pad	Signal	I/O	Function	Type	Comment
X0	GND	-	Ground	Ground	
AA0	GND	-	Ground	Ground	
AC0	GND	-	Ground	Ground	
AE0	GND	-	Ground	Ground	
AG0	GND	-	Ground	Ground	
AJ0	GND	-	Ground	Ground	
AL0	GND	-	Ground	Ground	
AN0	GND	-	Ground	Ground	
AR0	GND	-	Ground	Ground	
AV8	GND	-	Ground	Ground	
AV10	GND	-	Ground	Ground	
AV12	GND	-	Ground	Ground	
AV14	GND	-	Ground	Ground	
AV16	GND	-	Ground	Ground	
AV18	GND	-	Ground	Ground	
T8	GND	-	Ground	Ground	
V8	GND	-	Ground	Ground	
X8	GND	-	Ground	Ground	
AA8	GND	-	Ground	Ground	
U9	GND	-	Ground	Ground	
W9	GND	-	Ground	Ground	
Y9	GND	-	Ground	Ground	
T10	GND	-	Ground	Ground	
V10	GND	-	Ground	Ground	

Provided to Dekra under NDA
Distribution is Prohibited except for
Dekra employees with a Need to know

Pad	Signal	I/O	Function	Type	Comment
X10	GND	-	Ground	Ground	
AA10	GND	-	Ground	Ground	
U11	GND	-	Ground	Ground	
W11	GND	-	Ground	Ground	
Y11	GND	-	Ground	Ground	
T12	GND	-	Ground	Ground	
V12	GND	-	Ground	Ground	
X12	GND	-	Ground	Ground	
AA12	GND	-	Ground	Ground	
ZZ101	GND	-	Ground	Ground	
B101	GND	-	Ground	Ground	
D101	GND	-	Ground	Ground	
U101	GND	-	Ground	Ground	
W101	GND	-	Ground	Ground	
Y101	GND	-	Ground	Ground	
AR101	GND	-	Ground	Ground	
AT101	GND	-	Ground	Ground	
AV101	GND	-	Ground	Ground	
ZZ102	GND	-	Ground	Ground	
B102	GND	-	Ground	Ground	
D102	GND	-	Ground	Ground	
U102	GND	-	Ground	Ground	
W102	GND	-	Ground	Ground	

Provided to Dekra under NDA
Distribution is Prohibited except for
Dekra employees with a Need to Know

Pad	Signal	I/O	Function	Type	Comment
Y102	GND	-	Ground	Ground	
AR102	GND	-	Ground	Ground	
AT102	GND	-	Ground	Ground	
AV102	GND	-	Ground	Ground	
Reserved					
B19	Reserved	-	Reserved		
C20	Reserved	-	Reserved		
E20	Reserved	-	Reserved		
G20	Reserved	-	Reserved		
J20	Reserved	-	Reserved		
AN14	Reserved	-	Reserved		
E8	Reserved	-	Reserved		
E2	Reserved	-	Reserved		
D1	Reserved	-	Reserved		
C2	Reserved	-	Reserved		
B1	Reserved	-	Reserved		
C12	Reserved	-	Reserved		
J4	Reserved	-	Reserved		
G4	Reserved	-	Reserved		
AE4	Reserved	-	Reserved		
AC4	Reserved	-	Reserved		
Y3	Reserved	-	Reserved		
AB3	Reserved	-	Reserved		

Provided to Dekra under NDA
Distribution is Prohibited except for
Dekra employees with a Need to know

Pad	Signal	I/O	Function	Type	Comment
AD3	Reserved	-	Reserved		
AF3	Reserved	-	Reserved		
AH3	Reserved	-	Reserved		
AK3	Reserved	-	Reserved		
AM3	Reserved	-	Reserved		
AG4	Reserved	-	Reserved		
AJ4	Reserved	-	Reserved		
AL4	Reserved	-	Reserved		
AM5	Reserved	-	Reserved		
X4	Reserved	-	Reserved		
AA4	Reserved	-	Reserved		
S17	Reserved	-	Reserved		
U17	Reserved	-	Reserved		
AH17	Reserved	-	Reserved		
Y17	Reserved	-	Reserved		
AF17	Reserved	-	Reserved		
AB17	Reserved	-	Reserved		
W17	Reserved	-	Reserved		
AD17	Reserved	-	Reserved		
R20	Reserved	-	Reserved		
T20	Reserved	-	Reserved		
V20	Reserved	-	Reserved		
X20	Reserved	-	Reserved		
AA20	Reserved	-	Reserved		

Provided to Dekra under NDA
Distribution is Prohibited except for
Dekra employees with a Need to know

Pad	Signal	I/O	Function	Type	Comment
AC20	Reserved	-	Reserved		
AE20	Reserved	-	Reserved		
AG20	Reserved	-	Reserved		
AJ20	Reserved	-	Reserved		
AA16	Reserved	-	Reserved		
J16	Reserved	-	Reserved		
ZZ11	Reserved	-	Reserved		
ZZ13	Reserved	-	Reserved		
ZZ15	Reserved	-	Reserved		
ZZ17	Reserved	-	Reserved		
ZZ9	Reserved	-	Reserved		
ZZ7	Reserved	-	Reserved		
ZZ5	Reserved	-	Reserved		
ZZ3	Reserved	-	Reserved		
C0	Reserved	-	Reserved		
E0	Reserved	-	Reserved		
G0	Reserved	-	Reserved		
J0	Reserved	-	Reserved		
AM1	Reserved	-	Reserved		
AU13	Reserved	-	Reserved		
V2	Reserved	-	Reserved		
W3	Reserved	-	Reserved		
A14	Reserved	-	Reserved		
A16	Reserved	-	Reserved		

Provided to Dekra under NDA
Distribution is Prohibited except for
Dekra employees with a Need to know

Pad	Signal	I/O	Function	Type	Comment
F15	Reserved	-	Reserved		
AP1	Reserved	-	Reserved		
M17	Reserved	-	Reserved		
AN6	Reserved	-	Reserved		
AS3	Reserved	-	Reserved		
AT2	Reserved	-	Reserved		
S3	Reserved	-	Reserved		
U3	Reserved	-	Reserved		
L0	Reserved	-	Reserved		
AM7	Reserved	-	Reserved		
AL20	Reserved	-	Reserved		
AN20	Reserved	-	Reserved		
AT0	Reserved	-	Reserved		
AV6	Reserved	-	Reserved		
AV2	Reserved	-	Reserved		
AV4	Reserved	-	Reserved		

NOTE:

When the UART signals are used as the communication port between the host and the modem:

- The DTR pin must be connected to enter LE940B6 power saving mode.
- The RI pin must be connected to wake up the host when a call is coming while the host is in Sleep mode.
- The RTS must be connected to GND (on the module side) if flow control is not used.

If the UART port is not used, all UART signals can be left disconnected.

Provided to Dekra under NDA
Distribution is Prohibited except for
Dekra employees with a Need to know

NOTE:
Unless otherwise specified, RESERVED pins must be left unconnected (floating).
The only exceptions are listed in the following section: LE940B6 Signals That Must Be Connected.

3.2. LE940B6 Signals That Must Be Connected

Table 7 lists the LE940B6 signals that must be connected even if not used by the end application:

Table 7: Mandatory Signals

PAD	Signal	Notes
AP17, AP19, AR18, AR20, AS17, AS19, AT18, AU17, AU19, AT20	VBATT & VBATT_PA	
A6, A12, B13, B15, B17, C4, C6, D3, D7, E18, F1, G18, H19, M1, N2, P1, P3, R2, T2, T18, U1, V18, W1, X2, X18, Y1, Y19, AA2, AB1, AC2, AE2, AF1, AG2, AH1, AJ2, AK1, AK17, AL18, AM17, AM19, AN16, AN18, AP3, AP5, AP7, AP9, AP11, AP13, AP15, AR2, AR4, AR6, AR8, AR10, AR12, AR14, AR16, AS5, AS7, AS9, AS11, AS13, AS15, AT4, AT6, AT8, AT10, AT12, AT14, AT16, AU1, AU5, AU7, AU11, AU15, AL2, AN2, L20, N20, ZZ19, A20, AV20, ZZ1, A0, AV0, N0, R0, T0, V0, X0, AA0, AC0, AE0, AG0, AJ0, AL0, AN0, AR0, AV8, AV10, AV12, AV14, AV16, AV18, T8, V8, X8, AA8, U9, W9, Y9, T10 ,V10, X10, AA10, U11, W11, Y11, T12, V12, X12, AA12	GND	
AS1	ON/OFF*	
AN12	SHDN_N	
D19	USB_D+	If not used, connect to a test point or a USB connector
F19	USB_D-	If not used, connect to a test point or a USB connector
A18	USB_VBUS	If not used, connect to a test point or a USB connector

Provided to Dekra under NDA
Distribution is Prohibited except for Dekra employees with a Need to know

PAD	Signal	Notes
AH19	C103/TXD	If not used, connect to a test point
AF19	C104/RXD	If not used, connect to a test point
AA18	C105/RTS	If flow control is not used, connect to GND
AK19	C106/CTS	If not used, connect to a test point
AB19	TXD_AUX	If not used, connect to a test point
AD19	RXD_AUX	If not used, connect to a test point
AD1	ANT_1	If not used, connect to a 50 Ohm termination
AU9	ANT_DIV_1	If not used, connect to a 50 Ohm termination
S1	ANT_GPS	If not used, connect to a 50 Ohm termination
E4, F3, F5, G2, H3, J2, K3, L2, M3, L4, N4, R4, T4, V4	For Analysis	Recommended to connect to test points for analysis

Provided to Dekra under NDA
Distribution is prohibited except for
Dekra employees with a Need to know

3.3. LGA Pads Layout

Figure 2: LGA Pads Layout LE940B6 334 Pads Top View

(*) MMC is not supported, and the pins assigned for it became Reserved.

NOTE:
The pin defined as RFU must be considered RESERVED and not connected to any pin in the application. The related area on the application must be kept empty.

Provided to Telekra under NDA
Distribution is prohibited except for
Dekra employees with a Need to know

4. Electrical Specifications

4.1. Absolute Maximum Ratings – Not Operational

WARNING:
A deviation from the value ranges listed below may harm the LE940B6 module.

Table 8: Absolute Maximum Ratings – Not Operational

Symbol	Parameter	Min	Max	Unit
VBATT	Battery supply voltage on pin VBATT	-0.3	+6.0	[V]
VBATT_PA	Battery supply voltage on pin VBATT_PA	-0.3	+6.0	[V]

4.2. Recommended Operating Conditions

Table 9: Recommended Operating Conditions

Symbol	Parameter	Min	Typ	Max	Unit
Tamb	Ambient temperature	-40	+25	+85	[°C]
VBATT	Battery supply voltage on pin VBATT	3.4	3.8	4.2	[V]
VBATT_PA	Battery supply voltage on pin VBATT_PA	3.4	3.8	4.2	[V]
IBATT_PA + IBATT	Peak current to be used to dimension decoupling capacitors on pin VBATT_PA	-	80	2000	[mA]

Provided to Dekra under NDA
Distribution is Prohibited except for
Dekra employees with a Need to know

4.3. Logic Level Specifications

Unless otherwise specified, all the interface circuits of the LE940B6 are 1.8V CMOS logic. Only few specific interfaces (such as MAC, USIM and SD Card) are capable of dual voltage I/O.

The following tables show the logic level specifications used in the LE940B6 interface circuits. The data specified in the tables below is valid throughout all drive strengths and the entire temperature ranges.

NOTE:
Do not connect LE940B6 digital logic signals directly to OEM digital logic signals with a level higher than 2.7V for 1.8V CMOS signals.

4.3.1. 1.8V Standard GPIOs

Table 10: Absolute Maximum Ratings – Not Functional

Parameter	Min	Max
Input level on standard GPIOs when on	-0.3V	+2.3V

Table 11: Operating Range – Interface Levels (1.8V CMOS)

Parameter	Min	Max
Input high level	1.26V	2.0V
Input low level	-0.2V	0.36V
Output high level	1.6V	---
Output low level	---	0.2V

4.3.2. 1.8V I2C Pads

Table 12: Operating Range – 1.8V I2C Pads

Parameter	Min	Max
Input high level	1.26V	2.3V
Input low level	-0.3V	0.54V
Output high level	---	---

Provided to Dekra under NDA
Distribution is Prohibited except for
Dekra employees with a Need to know

Parameter	Min	Max
Output low level	---	0.36V

4.3.3. 1.8V/2.9V SIM Pads

Table 13: Operating Range – 1.8V SIM Pads

Parameter	Min	Max
Input high level	1.26V	2.1V
Input low level	-0.3V	0.36V
Output high level	1.26V	2.1V
Output low level	-0.3V	0.36V

Table 14: Operating Range – 2.9V SIM Pads

Parameter	Min	Max
Input high level	2.03V	3.1V
Input low level	-0.3V	0.58V
Output high level	2.03V	3.1V
Output low level	-0.3V	0.58V

4.3.4. USB

Table 15: Operating Range – USB_D+, USB_D- Pads

Parameter	Min	Max
Input high level	2.0V	---
Input low level	---	0.8V
Output high level	2.8V	---
Output low level	---	0.3V

Provided to Dekra under NDA
Distribution is Prohibited except for
Dekra employees with a Need to know

4.3.5. 2.5V/3.3V EMAC Interface for RMII and RGMII

Table 16: Absolute Maximum Ratings – 3.3V EMAC Interface

Parameter	Min	Max
Input level on 3.3V EMAC when on	-0.3V	3.6V

Table 17: Operating Range – 2.5V EMAC Interface

Parameter	Min	Max
Input high level	1.7V	2.5V
Input low level	-0.3V	0.7V
Output high level	2V	---
Output low level	---	0.4V

Table 18: Operating Range – 3.3V EMAC Interface

Parameter	Min	Max
Input high level	2V	3.3V
Input low level	-0.3V	0.8V
Output high level	2.6V	---
Output low level	---	0.5V

Provided to Dekra under NDA
Distribution is Prohibited except for
Dekra employees with a Need to know

5. Hardware Commands

5.1. Turning on the LE940B6 Module

To turn on the LE940B6 module, the ON_OFF_N pad must be asserted low in the range of 80 - 120 milliseconds and then released.

Figure 3 illustrates a simple circuit to power on the module using an inverted buffer output.

Figure 3: Power-on Circuit

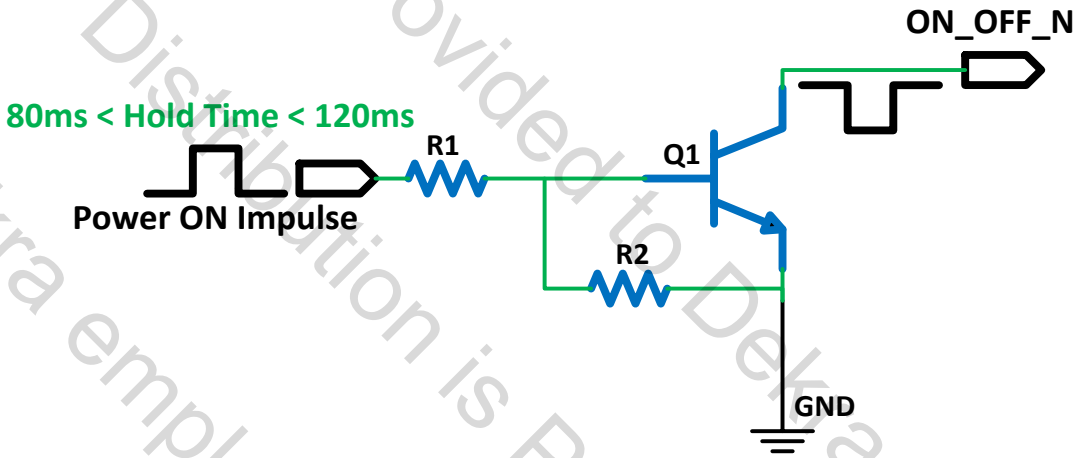

NOTE:
In case VBATT needs to be removed and applied again. The application must take into account the decay time of the power supply after VBATT is removed. VBATT input must be at zero volt before VBATT is reapplied.

5.2. Initialization and Activation State

After turning on the LE940B6 module, a predefined internal boot sequence performs the HW and SW initialization of the module, which takes some time to complete fully. During this process, the LE940B6 is not accessible.

As shown in Figure 4, the LE940B6 becomes operational at least 25 seconds after PWRMON goes HIGH.

NOTE:
During the Initialization state, AT commands are not available. The DTE host must wait for the Activation state prior to communicating with the LE940B6.

Provided to Dekra under NDA
Distribution is Prohibited except for
Dekra employees with a Need to know

Figure 4: LE940B6 Initialization and Activation

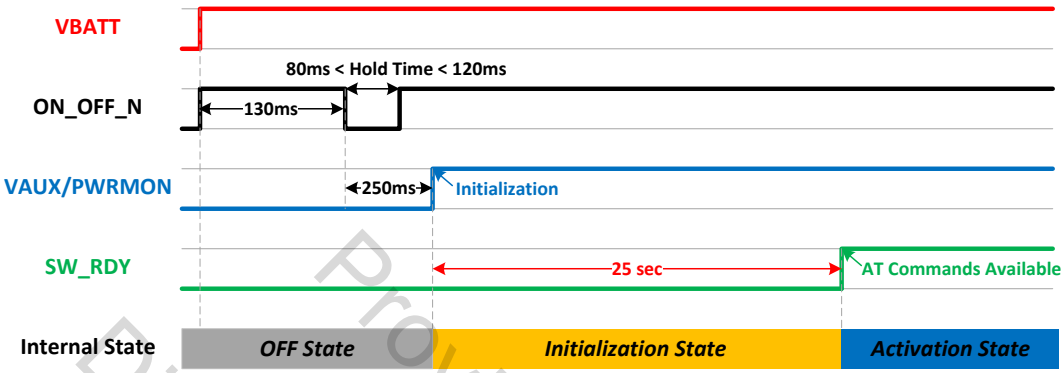

NOTE:
To check whether the LE940B6 has completely powered on, monitor the SW_RDY hardware line. When SW_RDY goes high, the module has completely powered on and is ready to accept AT commands.

NOTE:
Do not use any pull-up resistor on the ON_OFF_N line as it is internally pulled up. Using a pull-up resistor may cause latch-up problems on the LE940B6 power regulator and improper powering on/off of the module. The ON_OFF_N line must be connected only in an open-collector configuration.

NOTE:
To avoid a back-powering effect, it is recommended to avoid having any HIGH logic level signal applied to the digital pins of the module when it is powered OFF or during an ON/OFF transition.

Provided to Dekra under NDA
Distribution is Prohibited except for
Dekra employees with a need to know

Figure 5 shows a flow chart for the proper power-up procedure:

Figure 5: Power-up Flow Chart

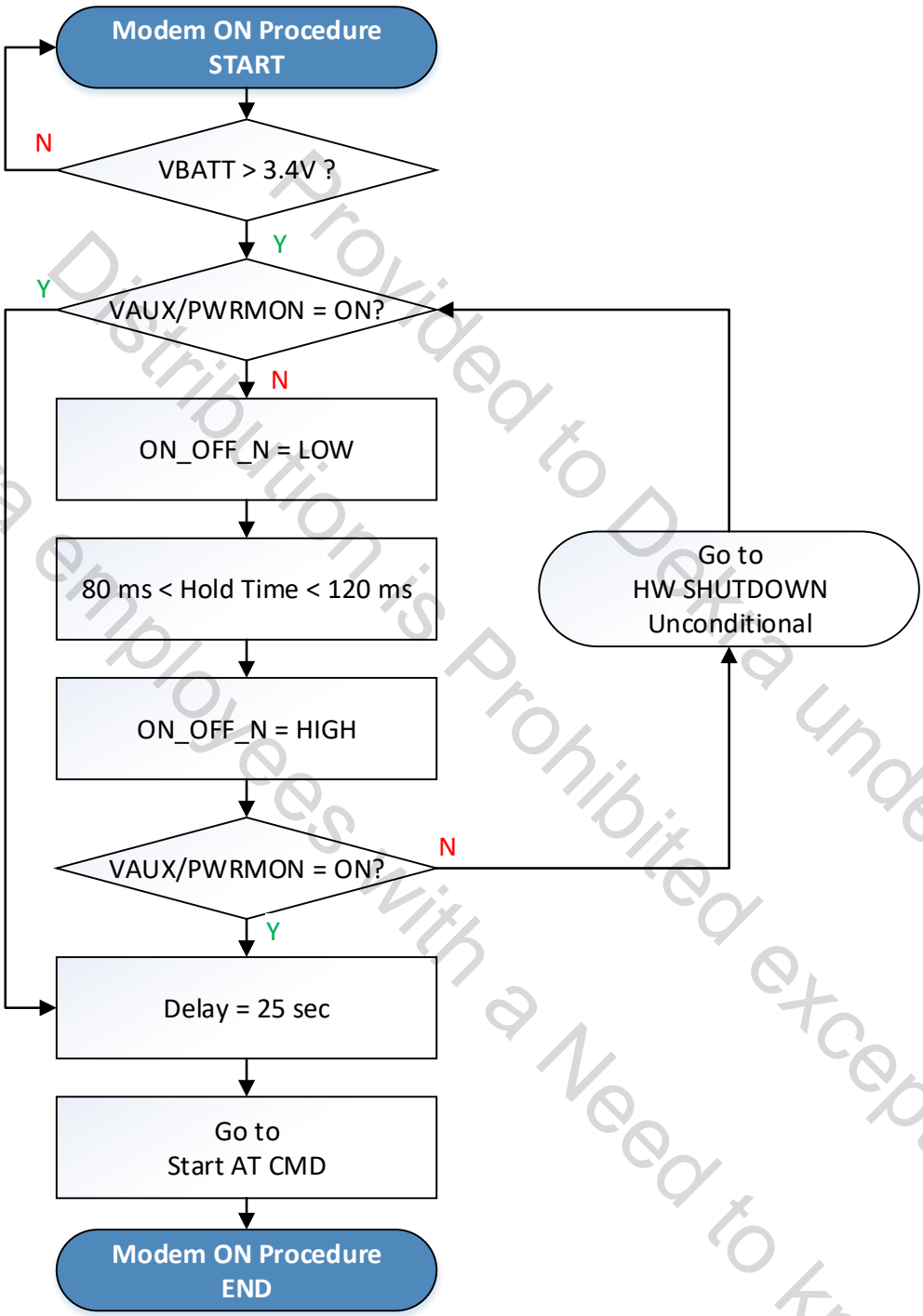

Provided to Dekra under NDA
Distribution is Prohibited except for
Dekra employees with a Need to know

Figure 6 shows a flow chart illustrating the AT commands managing procedure.

Figure 6: AT Command Managing Flow Chart

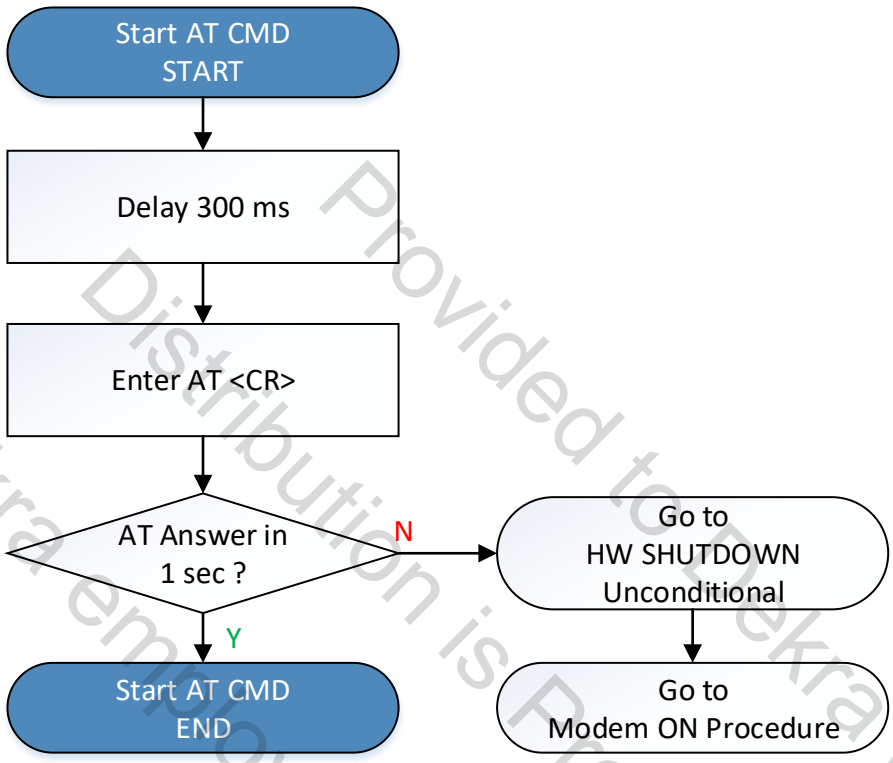

Provided to Dekra under NDA
Distribution is Prohibited except for
Dekra employees with a Need to know

5.3. Turning off the LE940B6 Module

Turning off the device can be done in four different ways:

- Shutdown by software command using AT#SHDN command
- Hardware shutdown using ON_OFF_N pad
- Hardware Unconditional Reset using the RESET_N pad
- Hardware Unconditional Shutdown using the SHDN_N pad

When the device is shut down by a software command or a hardware shutdown, it issues a detach request to the network, informing the network that the device will not be reachable any more.

NOTE:
To check if the device has powered off, monitor the VAUX/PWRMON hardware line. When VAUX/PWRMON goes low, this indicates that the device has powered off.

NOTE:
To avoid a back-powering effect, it is recommended to avoid having any HIGH logic level signal applied to the digital pins of the module when it is powered OFF or during an ON/OFF transition.

NOTE:
VBATT must be never removed before the proper OFF procedure is performed.

NOTE:
In case VBATT needs to be removed and applied again. The application must take into account the decay time of the power supply after VBATT is removed. VBATT input must be at zero volt before VBATT is reapplied.

Provided to Dekra under NDA
Distribution is Prohibited except for
Dekra employees with a Need to Know

5.3.1. Shutdown by Software Command

The LE940B6 module can be shut down by a software command.

When a shutdown command is sent, LE940B6 goes into the Finalization state and at the end of the finalization process shuts down VAUX/PWRMON.

The duration of the Finalization state can differ according to the current situation of the module, so a value cannot be defined.

Usually, it will take more than 10 seconds from sending a shutdown command until reaching a complete shutdown. The DTE host should monitor the status of VAUX/PWRMON to observe the actual power-off.

Figure 7: Shutdown by Software Command

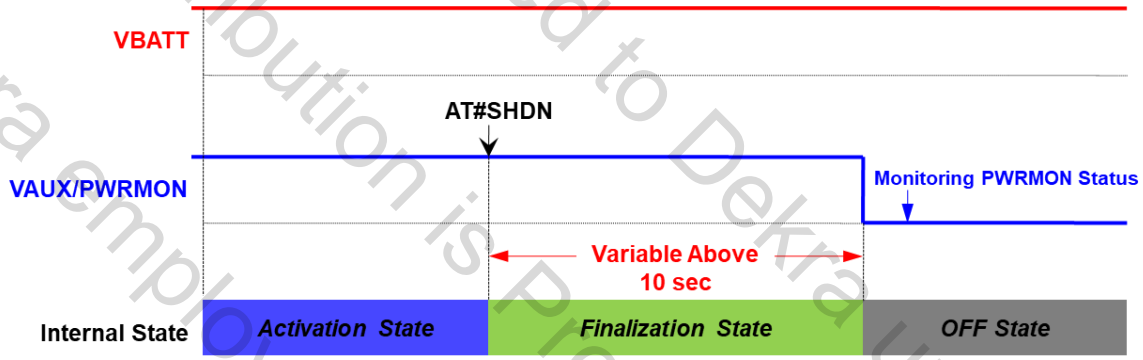

NOTE:
To check whether the device has powered off, monitor the VAUX/PWRMON hardware line. When VAUX/PWRMON goes low, the device has powered off.

Provided to Dekra under NDA
Distribution is Prohibited except for
Dekra employees with a Need to know

5.3.2. Hardware Shutdown

To turn off the LE940B6 module, the ON_OFF_N pad must be asserted low in the range of 1150 - 1250 milliseconds and then released. Use the same circuitry and timing for power-on.

When the ON_OFF_N is asserted low for a period in the range 1150 - 1250 milliseconds and then released, LE940B6 goes into the Finalization state and in the end shuts down VAUX/PWRMON.

The duration of the Finalization state can differ according to the current situation of the module, so a value cannot be defined.

Usually, it will take more than 10 seconds from sending a shutdown command until reaching a complete shutdown. The DTE host should monitor the status of VAUX/PWRMON to observe the actual power-off.

Figure 8: Hardware Shutdown

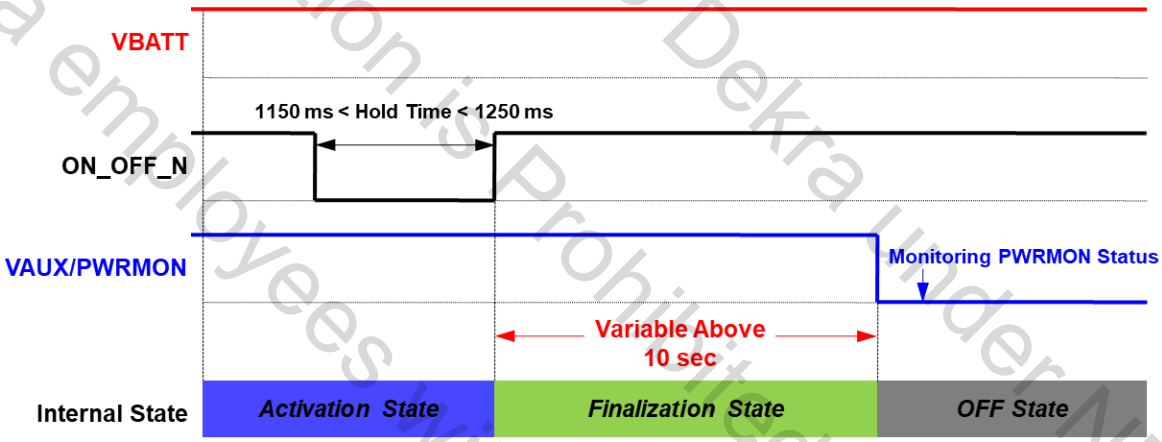

NOTE:
To check whether the device has powered off, monitor the VAUX/PWRMON hardware line. When VAUX/PWRMON goes low, the device has powered off.

Provided to Dekra under NDA
Distribution is Prohibited except for
Dekra employees with a Need to know

5.3.3. Unconditional Hardware Reset (RESET_N)

To unconditionally restart the LE940B6 module, the RESET_N pad must be tied low in the range 1300 - 1800 milliseconds and then released.

Figure 9 shows a simple circuit for this action.

Figure 9: Circuit for Unconditional Hardware Reset

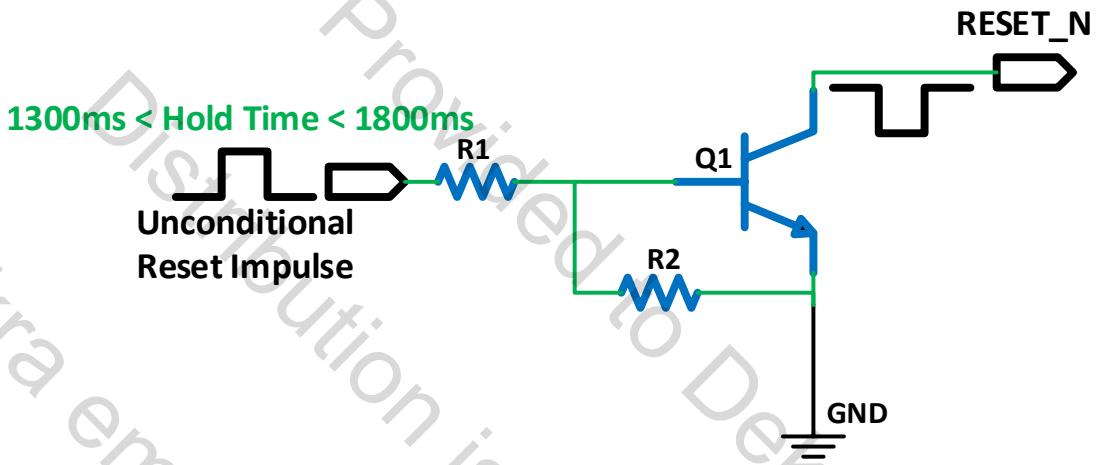

NOTE:
The Unconditional Hardware Reset must always be implemented on the boards, but the software must use it only as an emergency exit procedure, and not as a normal power-off operation.

NOTE:
Do not use any pull-up resistor on the RESET_N line or any totem pole digital output. Using a pull-up resistor may cause latch-up problems on the LE940B6 power regulator and improper functioning of the module. The RESET_N line must be connected only in an open-collector configuration.

Provided to Dekra under NDA
Distribution is Prohibited except for
Dekra employees with a Need to know

5.3.4. Unconditional Hardware Shutdown

To unconditionally shut down the LE940B6 module, the SHDN_N pad must be tied low for at least 200 milliseconds and then released.

Figure 10 shows a simple circuit for applying an unconditional shutdown.

Figure 10: Circuit for Unconditional Hardware Shutdown

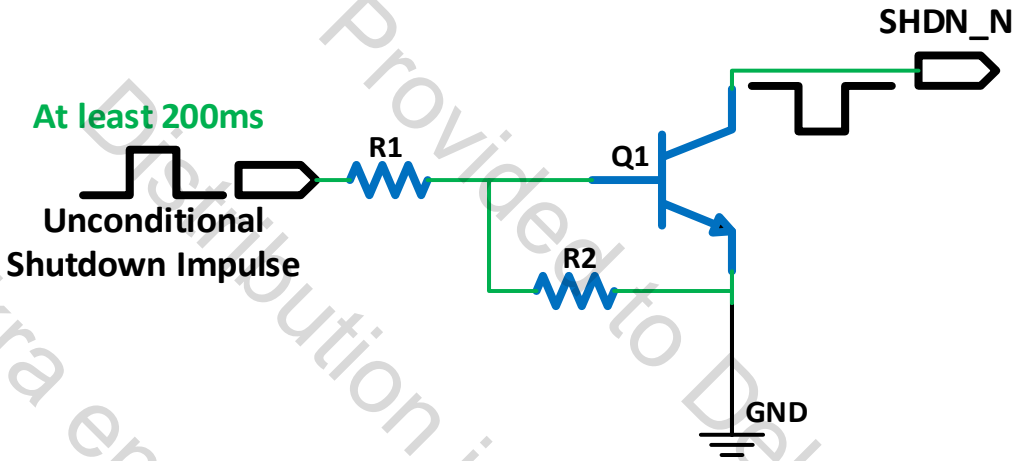

To check whether the device has powered off, monitor the VAUX/PWRMON hardware line. When VAUX/PWRMON goes low, the device has powered off.

NOTE:
Do not use any pull-up resistor on the SHDN_N line or any totem pole digital output. Using a pull-up resistor may cause latch-up problems on the LE940B6 power regulator and improper functioning of the module. The SHDN_N line must be connected only in an open-collector configuration.

NOTE:
The Unconditional Hardware Shutdown (SHDN_N) must always be implemented on the boards, but the software must use it only as an emergency exit procedure, and not as a normal power-off operation.

Provided to Dekra under NDA
Distribution is Prohibited except for
Dekra employees with a Need to know

Figure 11 shows a flow chart of the proper turn off procedure.

Figure 11: Turn Off Procedure

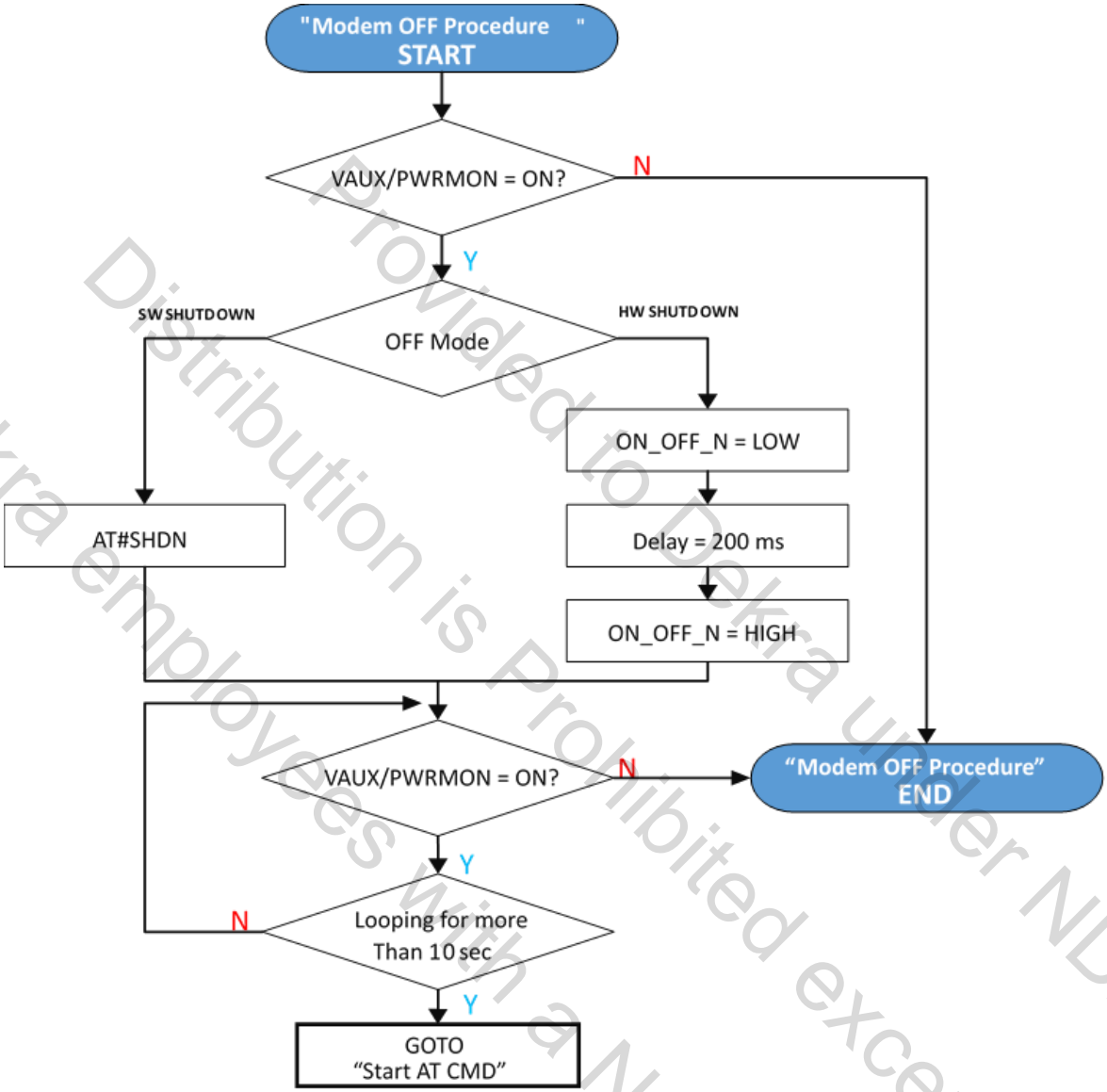

Provided to Dekra under NDA
Distribution is Prohibited except for
Dekra employees with a Need to know

6. Power Supply

The power supply circuitry and board layout are very important parts of the full product design, with critical impact on the overall product performance. Read the following requirements and guidelines carefully to ensure a good and proper design.

6.1. Power Supply Requirements

The LE940B6 power requirements are as follows:

Table 19: Power Supply Requirements

Nominal supply voltage	3.8V
Supply voltage range	3.4V – 4.2V
Max ripple on module input supply	30 mV

Table 20 provides typical current consumption values of LE940B6 for the various available modes.

Table 20: LE940B6 Current Consumption

Mode		Average (Typ.)	Mode Description
Switched Off			
Switched off		0.1 mA	Module supplied but switched Off
Idle Mode (Standby Mode; No Call in Progress)			
AT+CFUN=4		2.5 mA	Tx and Rx disabled; module is not registered on the network (Flight mode)
DRx	GSM	4.7 mA	DRx5
	WCDMA	4.7 mA	DRx6
		3.6 mA	DRx7
		3.1 mA	DRx8
		2.8 mA	DRx9
	LTE	7.7 mA	Paging cycle #32 frames (0.32 sec DRx cycle)
		5.1 mA	Paging cycle #64 frames (0.64 sec DRx cycle)
		3.8 mA	Paging cycle #128 frames (1.28 sec DRx cycle)
		3.2 mA	Paging cycle #256 frames (2.56 sec DRx cycle)

Provided to Dekra under NDA
Distribution is Prohibited except for
Dekra employees with a Need to know

Mode	Average (Typ.)	Mode Description
Operative Mode (LTE)		
LTE (0dBm)	350 mA	LTE data call (Non-CA BW 5 MHz, RB=1)
	600 mA	LTE data call (CA BW 20 + 20 MHz, Full RB, FDD 300 Mbps DL / 50 Mbps UL) without Ethernet cable connection and Loopback mode.
	850 mA	LTE data call (CA BW 20 + 20 MHz, Full RB, FDD 300 Mbps DL / 50 Mbps UL) with Ethernet cable connection (current consumption of Ethernet PHY not included)
LTE (23dBm)	900 mA	LTE data call (Non-CA BW 5 MHz, RB=1)
	1100 mA	LTE data call (CA BW 20 + 20 MHz, Full RB, FDD 300 Mbps DL / 50 Mbps UL) without Ethernet cable connection and Loopback mode.
	1350 mA	LTE data call (CA BW 20 + 20 MHz, Full RB, FDD 300 Mbps DL / 50 Mbps UL) with Ethernet cable connection (current consumption of Ethernet PHY not included)
Operative Mode (WCDMA)		
WCDMA Voice	800 mA	WCDMA voice call (Tx = 23 dBm)
WCDMA HSDPA (0 dBm)	350 mA	WCDMA data call (DC-HSDPA up to 42 Mbps, Max Throughput) without Ethernet cable connection and Loopback mode
	600 mA	WCDMA data call (DC-HSDPA up to 42 Mbps, Max Throughput) with Ethernet cable connection (current consumption of Ethernet PHY not included)
WCDMA HSDPA (23 dBm)	800 mA	WCDMA data call (DC-HSDPA up to 42 Mbps, Max Throughput) without Ethernet cable connection and Loopback mode
	1050 mA	WCDMA data call (DC-HSDPA up to 42 Mbps, Max Throughput) with Ethernet cable connection (current consumption of Ethernet PHY not included)

Provided to Delta under NDA
Distribution is prohibited except for
Dekra employees with a need to know

Mode	Average (Typ.)	Mode Description
Operative Mode (GSM)		
GSM Tx and Rx mode		
GSM 850/900 PL5	360 mA	GSM voice call
GSM 1800/1900 PL0	300 mA	
GPRS 4 Tx + 1 Rx		
GSM 850/900 PL5	750 mA	GPRS Sending Data mode (CS-4)
DCS 1800/1900 PL0	550 mA	
EGPRS 4 Tx + 1 Rx		
GSM 850/900 PL8	550 mA	GPRS Sending Data mode (MCS-5)
DCS 1800/1900 PL2	500 mA	

* Worst/best case current values depend on network configuration, not under module control.

** Applied MPR –2dB 16-QAM full RB

*** 3.8V voltage/room temperature

NOTE:
Differences in measurement technique, equipment, or temperature can cause variations in current consumption measurements.

NOTE:
The electrical design for the power supply must ensure a peak current output of at least 2.0A.

Provided to Dekra under NDA
Distribution is Prohibited except for
Dekra employees with a Need to know

NOTE:
In GSM/GPRS mode, RF transmission is not continuous, but is packed into bursts at a base frequency of about 216 Hz with relative current peaks as high as about 2.0A. Therefore, the power supply must be designed to withstand these current peaks without big voltage drops. This means that both the electrical design and the board layout must be designed for this current flow.
If the layout of the PCB is not well designed, a strong noise floor is generated on the ground. This will reflect on all the audio paths producing an audible annoying noise at 216 Hz.
If the voltage drops during the peaks, current absorption is too high. The device may even shut down as a consequence of the supply voltage drop.

6.2. General Design Rules

The principal guidelines for the Power Supply Design embrace three different design steps:

- Electrical design
- Thermal design
- PCB layout

6.2.1. Electrical Design Guidelines

The electrical design of the power supply depends strongly on the power source where this power is drained. Power sources can be distinguished by three categories:

- +5V input (typically PC internal regulator output)
- +12V input (typically automotive)
- Battery

6.2.1.1. + 5V Input Source Power Supply – Design Guidelines

- The desired output for the power supply is 3.8V. So, the difference between the input source and the desired output is not big, and therefore a linear regulator can be used. A switching power supply is preferred to reduce power consumption.
- When using a linear regulator, a proper heat sink must be provided to dissipate the power generated.
- A bypass low ESR capacitor of adequate capacity must be provided to cut the current absorption peaks close to the LE940B6 module. A 100 µF tantalum capacitor is usually suitable on both VBATT and VBATT_PA power lines.
- Make sure that the low ESR capacitor on the power supply output (usually a tantalum one) is rated at least 10V.
- A protection diode must be inserted close to the power input to protect the LE940B6 module from power polarity inversion.

Provided to Dekra under NDA
Distribution is Prohibited except for
Dekra employees with a Need to Know

Figure 12 shows an example of linear regulator with 5V input.

Figure 12: Example of Linear Regulator with 5V Input

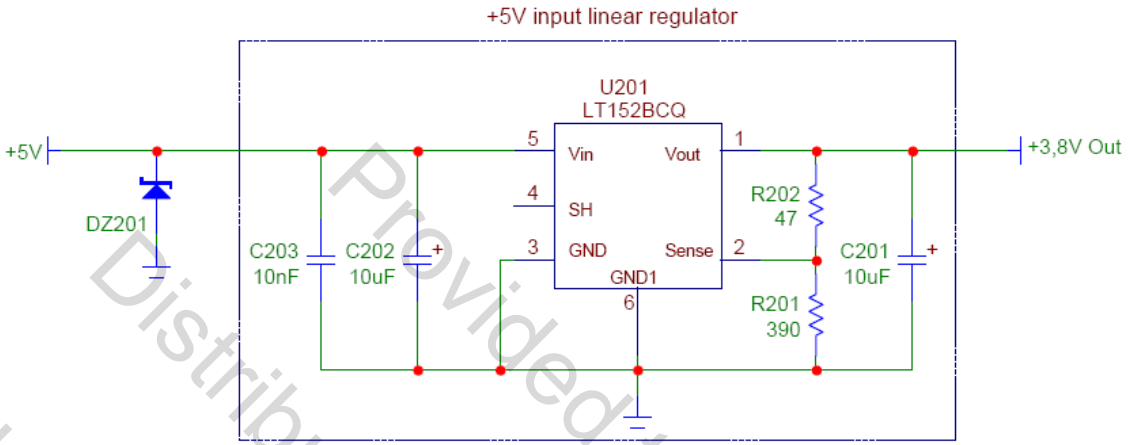

6.2.1.2. + 12V Input Source Power Supply – Design Guidelines

- The desired output for the power supply is 3.8V. Due to the big difference between the input source and the desired output, a linear regulator is unsuitable and must not be used. A switching power supply is preferable because of its better efficiency, especially with the 2A peak current load expected when working with the LE940B6.
- When using a switching regulator, a 500-kHz or higher switching frequency regulator is preferable because of its smaller inductor size and its faster transient response. This allows the regulator to respond quickly to the current peaks absorption.
- In any case, the selection of the frequency and switching design is related to the application to be developed due to the fact that the switching frequency can also generate EMC interference.
- For car batteries (lead-acid accumulators) the input voltage can rise up to 15.8V. This must be kept in mind when choosing components: all components in the power supply must withstand this voltage.
- A bypass low ESR capacitor of adequate capacity must be provided to cut the current absorption peaks. A 100µF tantalum capacitor is usually suitable on VBATT & VBATT_PA power lines.
- Make sure that the low ESR capacitor on the power supply output (usually a tantalum one) is rated at least 10V.
- For automotive applications, a spike protection diode must be inserted close to the power input to clean the supply of spikes.
- A protection diode must be inserted close to the power input to protect the LE940B6 module from power polarity inversion. This can be the same diode as for spike protection.

Provided to Dekra under NDA
Distribution is Prohibited except for
Dekra employees with a Need to know

Figure 13 and Figure 14 show an example of switching regulator with 12V input.

Figure 13: Example of Switching Regulator with 12V Input – Part 1

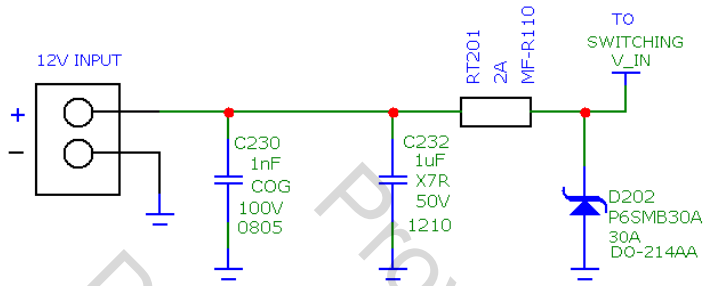

Figure 14: Example of Switching Regulator with 12V Input – Part 2

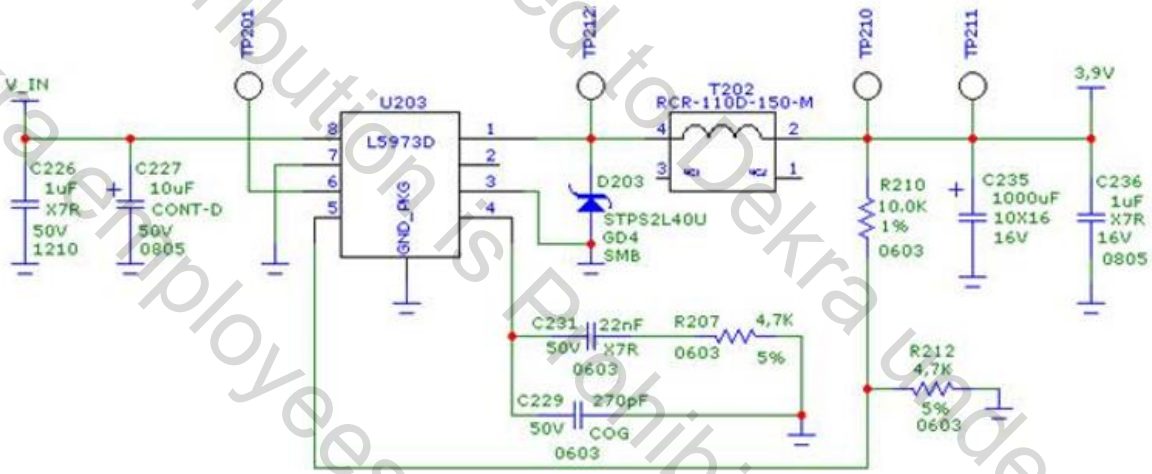

Provided to Dekra under NDA
Distribution is Prohibited except for
Dekra employees with a Need to know

6.2.1.3. Battery Source Power Supply – Design Guidelines

- The desired nominal output for the power supply is 3.8V, and the maximum allowed voltage is 4.2V. Hence, a single 3.7V Li-Ion cell battery type is suitable for supplying the power to the LE940B6 module.

NOTE:
Do not use any Ni-Cd, Ni-MH, and Pb battery types directly connected to the LE940B6 module. Their use can lead to overvoltage on the LE940B6 and damage it. Use only Li-Ion battery types.

- A bypass low ESR capacitor of adequate capacity must be provided to cut the current absorption peaks; a 100µF tantalum capacitor is usually suitable.
- Make sure that the low ESR capacitor (usually a tantalum one) is rated at least 10V.
- A protection diode must be inserted close to the power input to protect the LE940B6 module from power polarity inversion. Otherwise, the battery connector must be done in a way to avoid polarity inversions when connecting the battery.
- The battery capacity must be at least 500 mAh to withstand the current peaks of 2A. The suggested capacity is from 500 mAh to 1000 mAh.

6.2.2. Thermal Design Guidelines

The thermal design for the power supply heat sink must be done with the following specifications:

- Average current consumption during LTE 2xCA DL Max throughput @PWR level max in LE940B6: 1250 mA

NOTE:
The average consumption during transmission depends on the power level at which the device is requested to transmit via the network. Therefore, the average current consumption varies significantly.

In LTE mode, the LE940B6 emits RF signals continuously during transmission. Therefore, pay special attention to how the generated heat is dissipated.

The current consumption is up to about 1250 mA in 2xCA Max throughput, and 1250 mA in LTE continuously at the maximum Tx output power 23.0 dBm.

Provided to Dekra under NDA
Distribution is Prohibited except for
Dekra employees with a Need to know

The current consumption is up to about 1250 mA continuously at the maximum Tx output power (23 dBm). Therefore, make sure on the PCB used to mount LE940B6, that the area under the LE940B6 module is as large as possible. Make sure that the LE940B6 is mounted on the large ground area of application board and provide many ground vias to dissipate the heat.

6.2.3. Power Supply PCB Layout Guidelines

As seen in the electrical design guidelines, the power supply must have a low ESR capacitor on the output to cut the current peaks and a protection diode on the input to protect the supply from spikes and polarity inversion. The placement of these components is crucial for the correct operation of the circuitry. A misplaced component can be useless or can even decrease the power supply performances.

- The bypass low ESR capacitor must be placed close to the LE940B6 power input pads, or if the power supply is of a switching type, it can be placed close to the inductor to cut the ripple, as long as the PCB trace from the capacitor to LE940B6 is wide enough to ensure a drop-less connection even during the 2A current peaks.
- The protection diode must be placed close to the input connector where the power source is drained.
- The PCB traces from the input connector to the power regulator IC must be wide enough to ensure that no voltage drops occur during the 2A current peaks.

  Note that this is not done to save power loss but especially to avoid the voltage drops on the power line at the current peaks frequency of 216 Hz that will reflect on all the components connected to that supply (also introducing the noise floor at the burst base frequency.)

  For this reason while a voltage drop of 300-400 mV may be acceptable from the power loss point of view, the same voltage drop may not be acceptable from the noise point of view. If your application does not have an audio interface but only uses the data feature of the LE940B6, this noise is not so disturbing, and the power supply layout design can be more forgiving.

- The PCB traces to LE940B6 and the bypass capacitor must be wide enough to ensure that no significant voltage drops occur when the 2A current peaks are absorbed. This is needed for the same above-mentioned reasons. Try to keep these traces as short as possible.
- The PCB traces connecting the switching output to the inductor and the switching diode must be kept as short as possible by placing the inductor and the diode very close to the power switching IC (only for the switching power supply). This is done to reduce the radiated field (noise) at the switching frequency (usually 100-500 kHz).
- Use a good common ground plane.
- Place the power supply on the board in a way to guarantee that the high current return paths in the ground plane do not overlap any noise sensitive circuitry, such as the microphone amplifier/buffer or earphone amplifier.

Provided to Dekra Under NDA
Distribution is Prohibited except for
Dekra employees with a Need to Know

- The power supply input cables must be kept separate from noise sensitive lines, such as microphone/earphone cables.

Provided to Dekra under NDA
Distribution is Prohibited except for
Dekra employees with a Need to know

7. Antenna(s)

Antenna connection and board layout design are the most important parts in the full product design, and they have a strong influence on the product's overall performance. Read carefully and follow the requirements and guidelines for a good and proper design.

7.1. GSM/WCDMA/TD-SCDMA/LTE Antenna Requirements

The antenna for the LE940B6 device must meet the following requirements:

Table 21: Primary Antenna Requirements

Gain	Gain < 3 dBi
Impedance	50 Ohm
Input power	> 33 dBm(2 W) peak power in GSM > 24 dBm average power in WCDMA & LTE
VSWR absolute max	<= 10:1
VSWR recommended	<= 2:1

The antenna for a specific car model must support a given set of RF bands. This set is determined by the region variant and the specific set of bands within (either the full band set offered by Titan or a subset per the customer choice). The antenna must have the proper bandwidth to support the required set of bands and meet the other performance figures according to the Table 21, along the full bandwidth. The RF bands supported in each region variant are detailed in Section 2.5.1, RF Bands per Regional Variant.

Since there is no antenna connector on the LE940B6 module, the antenna must be connected to the LE940B6 antenna pad (AD1) by a transmission line implemented on the PCB.

If the antenna is not directly connected to the antenna pad of the LE940B6, a PCB line is required to connect to it or to its connector.

7.2. GSM/WCDMA/TD-SCDMA/LTE Antenna – PCB Line Guidelines

- Make sure that the transmission line's characteristic impedance is 50 Ohm.
- Keep the line on the PCB as short as possible since the antenna line loss should be less than around 0.3 dB.
- Line geometry should have uniform characteristics, constant cross sections, and avoid meanders and abrupt curves.
- Any suitable geometry/structure can be used for implementing the printed transmission line affecting the antenna.
- If a ground plane is required in the line geometry, this plane must be continuous and sufficiently extended so the geometry can be as similar as possible to the related canonical model.

Provided to Dekra under NDA
Distribution is Prohibited except for
Dekra employees with a Need to know

- Keep, if possible, at least one layer of the PCB used only for the ground plane. If possible, use this layer as reference ground plane for the transmission line.
- Surround the PCB transmission line with ground (on both sides). Avoid having other signal tracks facing the antenna line track directly.
- Avoid crossing any un-shielded transmission line footprint with other tracks on different layers.
- The ground surrounding the antenna line on the PCB must be strictly connected to the main Ground plane by means of via-holes (once per 2 mm at least) placed close to the ground edges facing the line track.
- Place EM-noisy devices as far as possible from LE940B6 antenna line.
- Keep the antenna line far away from the LE940B6 power supply lines.
- If EM-noisy devices are present on the PCB hosting the LE940B6, such as fast switching ICs, take care to shield them with a metal frame cover.
- If EM-noisy devices are not present around the line, geometries like Micro strip or Grounded Coplanar Waveguide are preferred because they typically ensure less attenuation compared to a Strip line having the same length.

This transmission line must meet the following requirements:

Table 22: Antenna Line on PCB Requirements

Characteristic impedance	50 Ohm
Max attenuation	0.3 dB
Avoid coupling with other signals.	
Cold End (Ground Plane) of the antenna must be equipotential to the LE940B6 ground pads.	

Furthermore if the device is developed for the US and/or Canada market, it must comply with the FCC and/or IC approval requirements:

This device is to be used only for mobile and fixed application. The antenna(s) used for this transmitter must be installed to provide a separation distance of at least 20 cm from all persons and must not be co-located or operating in conjunction with any other antenna or transmitter. End-Users must be provided with transmitter operation conditions for satisfying RF exposure compliance. OEM integrators must ensure that the end user has no manual instructions to remove or install the LE940B6 module. Antennas used for this OEM module must not exceed 3dBi gain for mobile and fixed operating configurations.

7.3. GSM/WCDMA/TD-SCDMA/LTE Antenna – Installation Guidelines

- Install the antenna in a location with access to the network radio signal.
- The antenna must be installed such that it provides a separation distance of at least 20 cm from all persons and must not be co-located or operating in conjunction with any other antenna or transmitter.
- The antenna must not be installed inside metal cases.
- The antenna must be installed according to the antenna manufacturer's instructions.

Provided to Dekra under NDA
Distribution is Prohibited except for Dekra employees with a Need to Know

7.4. Secondary Antenna Requirements

This product includes an input for a second Rx antenna to improve radio sensitivity. The function is called Antenna Diversity.

Since there is no antenna connector on the LE940B6 module, the antenna must be connected to the LE940B6 antenna pad by means of a transmission line implemented on the PCB.

If the antenna is not directly connected at the antenna pad of the LE940B6 (AU9), a PCB line is required to connect to it or to its connector.

The second Rx antenna must not be located in close vicinity of the main antenna. To improve diversity gain and isolation and to reduce mutual interaction, the two antennas should be located at the maximum reciprocal distance possible, taking into consideration the available space within the application.

NOTE:
If Rx Diversity is not used/connected, disable the Diversity functionality using the AT+XRXDIV command (refer to Ref 1: LE940B6 AT Command Reference Guide) and connect the Diversity pad AU9 to a 50 Ohm termination.

7.5. PCB Guidelines in Case of FCC Certification

If FCC certification is required for an application using LE940B6-NA, according to FCC KDB 996369 for modular approval requirements, the transmission line must be similar to the one implemented on the module's interface board and described in the following chapter.

7.5.1. Transmission Line Design

During the design of the interface board, the placement of components has been chosen properly to keep the line length as short as possible, thus leading to lowest power losses possible. A Grounded Coplanar Waveguide (G-CPW) line has been chosen, since this kind of transmission line ensures good impedance control and can be implemented in an outer PCB layer as needed in this case. A SMA female connector has been used to feed the line.

The interface board is realized on a FR4, 4-layers PCB. Substrate material is characterized by relative permittivity εr = 4.6 ± 0.4 @ 1 GHz, TanD= 0.019 ÷ 0.026 @ 1 GHz.

Provided to Dekra under NDA
Distribution is Prohibited except for
Dekra employees with a Need to know

A characteristic impedance of nearly 50 Ω is achieved using trace width = 1.1 mm, clearance from coplanar ground plane = 0.3 mm on each side. The line uses a reference ground plane on Layer 3, while copper is removed from Layer 2 underneath the line. Height of trace above the ground plane is 1.335 mm. Calculated characteristic impedance is 51.6 Ω, estimated line loss is less than 0.1 dB. The line geometry is shown below.

Figure 15: Line Geometry

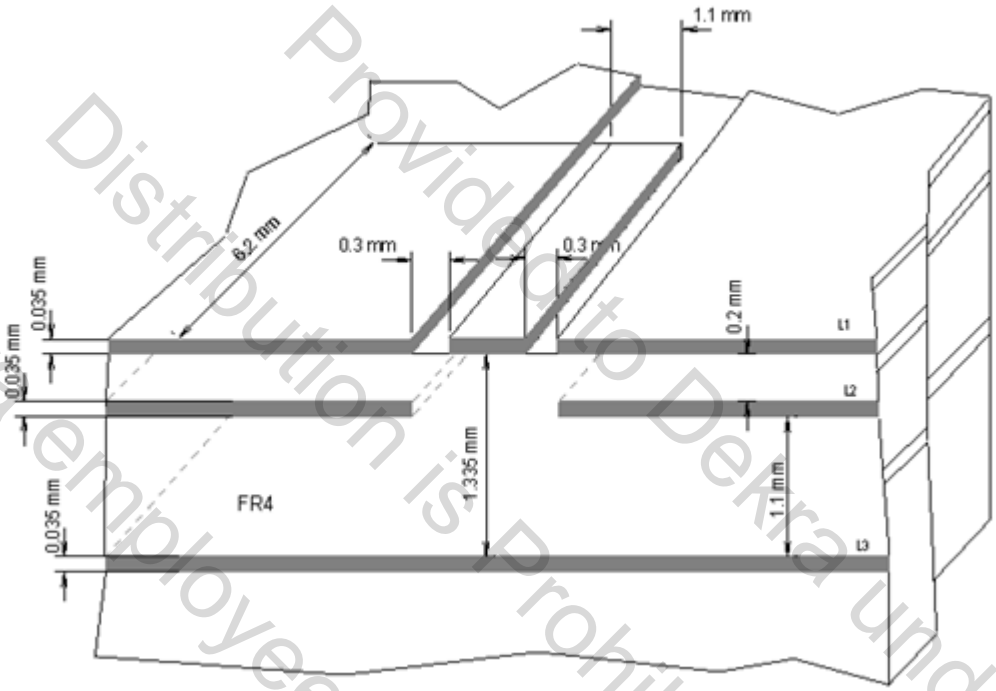

7.5.2. Transmission Line Measurements

E5071C NA (Full-4-port calibration) has been used in this measurement session. A calibrated coaxial cable has been soldered at the pad corresponding to RF output; a SMA connector has been soldered to the board to characterize the losses of the transmission line including the connector itself. During return loss / impedance measurements, the transmission line has been terminated to a load of 50 Ω.

Provided to Dekra under NDA
Distribution is Prohibited except for
Dekra employees with a Need to know

Figure 16 illustrates the return loss plot of line under test.

Figure 16: Return Loss Plot of Line Under Test

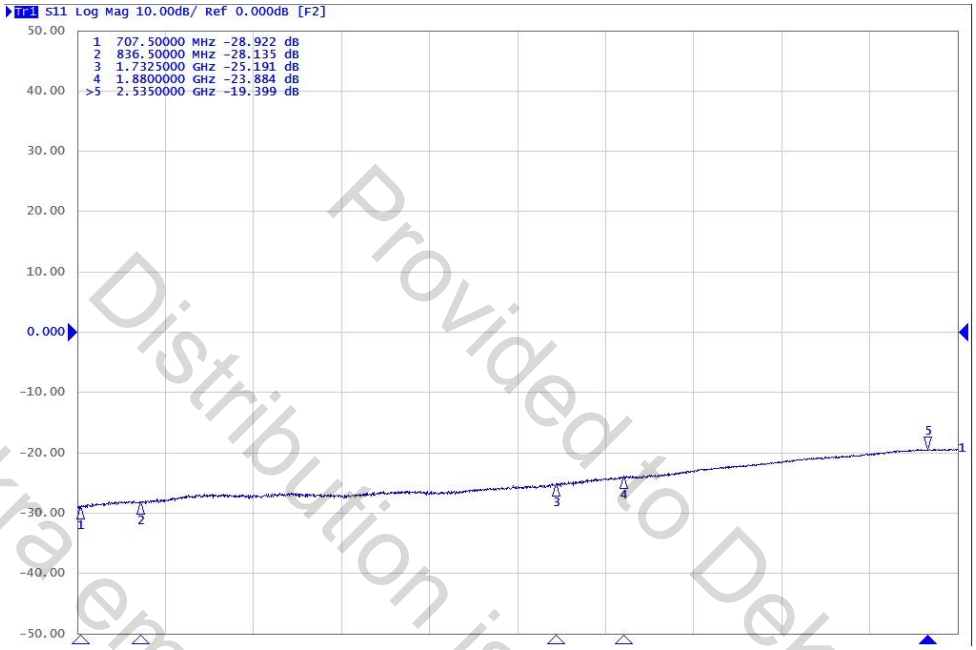

Figure 17 shows the line input impedance (in Smith Chart format, once the line has been terminated to a load of 50 Ω) .

Figure 17: Line Input Impedance

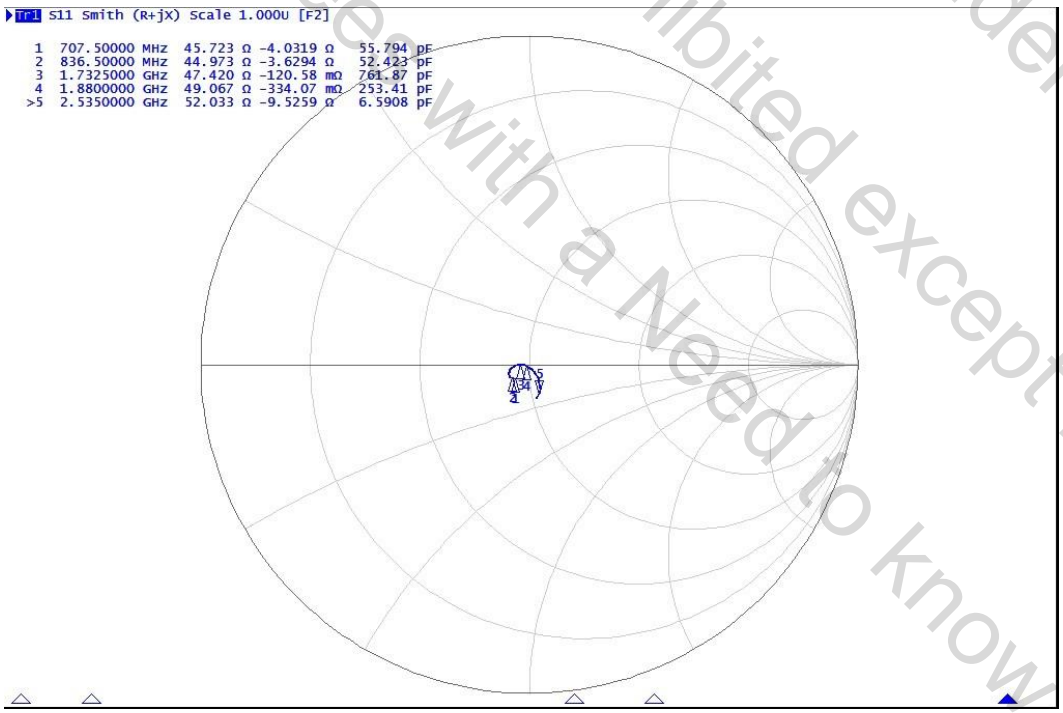

Provided to Dekra under NDA
Distribution is Prohibited except for
Dekra employees with a Need to know

8. Hardware Interfaces

Table 23 summarizes all the hardware interfaces of the LE940B6 module.

Table 23: LE940B6 Hardware Interfaces

	LE940B6 (XMM7272 CAT6)
Ethernet	RMII/RGMII
USB	USB2.0
SPI	Master only, up to 26 MHz (104 MHz @ Kernel CLK/4)
I2C	For sensors, audio control
UART	x1 UART for AT (up to 4.8 Mbps) x1 UART for diagnosis (up to 4.8 Mbps) x1 UART for GNSS or external controller (up to 4.8 Mbps)
Audio I/F	I2S/PCM, Analog audio
GPIO	15 dedicated GPIO
USIM	X2, dual voltage each (1.8/2.9V); SIM chip integration not possible
ADC	Up to x3
Antenna ports	2 for Cellular, 1 for GNSS

Provided to Dekra under NDA
Distribution is Prohibited except for
Dekra employees with a Need to know

8.1. USB Port

The LE940B6 module includes a Universal Serial Bus (USB) transceiver, which operates at USB high-speed (480Mbits/sec). It can also operate with USB full-speed hosts (12Mbits/sec).

It is compliant with the USB 2.0 specification and can be used for control and data transfers as well as for diagnostic monitoring and firmware update.

NOTE:
With the LE940B6 module, firmware updates by the host are only possible via USB and not possible via UART. The reason is that Titan considers it impractical to transfer firmware binaries exceeding 100Mb via UART.

The USB port is typically the main interface between the LE940B6 module and OEM hardware.

NOTE:
The USB_D+ and USB_D- signals have a clock rate of 480 MHz. The signal traces must be routed carefully. Minimize trace lengths, number of vias, and capacitive loading. The impedance value should be as close as possible to 90 Ohms differential.

The pull-up, pull-down and series resistors on pins USB_D+ and USB_D- as required by the USB 2.0 specification are included inside the module.

Table 24 lists the USB interface signals.

Table 24: USB Interface Signals

Signal	Pad No.	Usage
USB_VBUS	A18	Power and cable detection for the internal USB transceiver. Acceptable input voltage range 2.5V – 5.5V @ max 5 mA consumption
USB_D-	F19	Minus (-) line of the differential, bi-directional USB signal to/from the peripheral device
USB_D+	D19	Plus (+) line of the differential, bi-directional USB signal to/from the peripheral device

Provided to Dekra under NDA
Distribution is Prohibited except for
Dekra employees with a Need to know

NOTE:
USB_VBUS input power is internally used to detect the USB port and start the enumeration process. It is not used for supplying power to the internal LE940B6 USB HW block.

NOTE:
Even if USB communication is not used, it is still highly recommended to place an optional USB connector on the application board.
At least test points of the USB signals are required since the USB physical communication is needed in the case of SW update.

WARNING:
Consider placing low-capacitance ESD protection device to protect LE940B6 against ESD strikes.

If an ESD protection should be added, the suggested connectivity is as follows:

Figure 18: ESD Protection for USB2.0

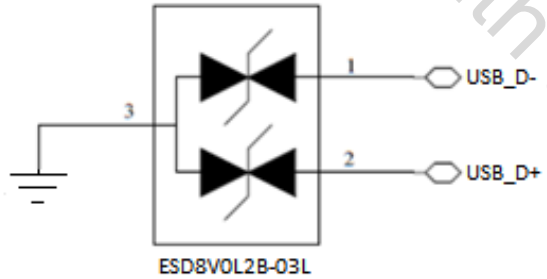

Provided to Dekra under NDA
Distribution is Prohibited except for
Dekra employees with a Need to know

8.2. Serial Ports

The serial port is typically a secondary interface between the LE940B6 module and OEM hardware. The following serial ports are available on the module:

- Modem Serial Port 1 (Main)
- Modem Serial Port 2 (Auxiliary)
- Modem Serial Port 3 (GNSS)

Several serial port configurations can be designed for the OEM hardware. The most common are:

- RS232 PC com port
- Microcontroller UART @ 1.8V (Universal Asynchronous Receive Transmit)
- Microcontroller UART @ 3.3V/5V or other voltages different from 1.8V

Depending on the type of serial port on OEM hardware, level translator circuits may be needed to make the system operate. The only configuration that does not need level translation is the 1.8V UART. The LE940B6 UART has CMOS levels as described in Section 4.3.1, 1.8V Standard GPIOs.

8.2.1. Modem Serial Port 1

Serial Port 1 is a +1.8V UART, having all the 8 RS232 signals. It differs from the PC-RS232 in the signal polarity (RS232 is reversed) and levels. Table 25 lists the signals of LE940B6 Serial Port 1.

Table 25: Modem Serial Port 1 Signals

RS232 Pin#	Signal	Pad No.	Name	Usage
1	DCD - DCD_UART	AE18	Data Carrier Detect	Output from LE940B6 that indicates carrier presence
2	RXD - TX_UART	AF19	Transmit line *see Note	Output transmit line of LE940B6 UART
3	TXD - RX_UART	AH19	Receive line *see Note	Input receive line of LE940B6 UART
4	DTR - DTR_UART	AC18	Data Terminal Ready	Input to LE940B6 that controls the DTE READY condition
5	DSR - DSR_UART	AG18	Data Set Ready	Output from LE940B6 that indicates that the module is ready
6	RTS - RTS_UART	AA18	Request to Send	Input to LE940B6 controlling the Hardware flow control

Provided to Dekra under NDA
Distribution is Prohibited except for
Dekra employees with a Need to know

RS232 Pin#	Signal	Pad No.	Name	Usage
7	CTS - CTS_UART	AK19	Clear to Send	Output from LE940B6 controlling the Hardware flow control
8	RI - RI_UART	AJ18	Ring Indicator	Output from LE940B6 indicating the Incoming call condition

NOTE:
To avoid a back-powering effect, it is recommended to avoid having any HIGH logic level signal applied to the digital pins of the module when it is powered OFF or during an ON/OFF transition.

NOTE:
For minimum implementations, only the TXD and RXD lines need be connected. The other lines can be left open provided a software flow control is implemented.

NOTE:
According to V.24, Rx/Tx signal names refer to the application side; therefore, on the LE940B6 side, these signal are in the opposite direction: TXD on the application side will be connected to the receive line (here named TXD/ RX_UART) of the LE940B6 serial port and vice versa for Rx.

8.2.2. Modem Serial Port 2

On the LE940B6, Serial Port 2 is a +1.8V UART with Rx and Tx signals only.

Table 26 lists the signals of the LE940B6 Serial Port 2.

Table 26: Modem Serial Port 2 Signals

PAD	Signal	I/O	Function	Type	Comment
AB19	TXD_AUX	O	Auxiliary UART (Tx Data to DTE)	1.8V	
AD19	RXD_AUX	I	Auxiliary UART (Rx Data to DTE)	1.8V	

Provided to Dekra under NDA
Distribution is Prohibited except for
Dekra employees with a Need to know

NOTE:
To avoid a back-powering effect, it is recommended to avoid having any HIGH logic level signal applied to the digital pins of the module when it is powered OFF or during an ON/OFF transition.

NOTE:
The Auxiliary UART is used as the SW main debug console. It is required to place test points on this interface even if not used.

8.2.3. Modem Serial Port 3

Serial port 3 is a +1.8V UART with all 4 RS232 signals. It differs from the PC-RS232 in the signal polarity (RS232 is reversed) and levels. Table 27 lists the signals of the LE940B6 Serial Port 3.

Table 27: Modem Serial Port 3 Signals

PAD	Signal	I/O	Function	Type	Comment
AM9	UART3_TXD	I	Serial data input (TXD) from DTE	1.8V	
AM11	UART3_RXD	O	Serial data output (RXD) to DTE	1.8V	
AM13	UART3_RTS	I	Input for Request to Send (RTS) from DTE	1.8V	
AM15	UART3_CTS	O	Output for Clear to Send (CTS) to DTE	1.8V	

NOTE:
To avoid a back-powering effect, it is recommended to avoid having any HIGH logic level signal applied to the digital pins of the module when it is powered OFF or during an ON/OFF transition.

Provided to Dekra under NDA
Distribution is Prohibited except for
Dekra employees with a Need to know

8.2.4. RS232 Level Translation

To interface the LE940B6 with a PC COM port or an RS232 (EIA/TIA-232) application, a level translator is required. This level translator must perform the following actions:

- Invert the electrical signal in both directions
- Change the level from 0/1.8V to +15/-15V

The RS232 UART 16450, 16550, 16650 & 16750 chipsets accept signals with lower levels on the RS232 side (EIA/TIA-562), allowing a lower voltage-multiplying ratio on the level translator. Note that the negative signal voltage must be less than 0V and hence some sort of level translation is always required.

The simplest way to translate the levels and invert the signal is by using a single chip-level translator. There are a multitude of them, differing in the number of drivers and receivers and in the levels (be sure to get a true RS232 level translator, not a RS485 or other standards).

By convention, the driver is the level translator from the 0-1.8V UART to the RS232 level. The receiver is the translator from the RS232 level to 0-1.8V UART. To translate the whole set of control lines of the UART, the following is required:

- 2 drivers
- 2 receivers

WARNING:
The digital input lines, operating at 1.8V CMOS levels, have absolute maximum input voltage of 2.0V. The level translator IC outputs on the module side (i.e. LE940B6 inputs) will cause damage to the module inputs if the level translator is powered with +3.8V power.
So the level translator IC must be powered from a dedicated +1.8V power supply.

Provided to Dekra under NDA
Distribution is Prohibited except for
Dekra employees with a Need to know

As an example, RS232 level adaption circuitry could use a MAXIM transceiver (MAX218). In this case, the chipset is capable of translating directly from 1.8V to the RS232 levels (example on 4 signals only).

Figure 19: RS232 Level Adaption Circuitry Example

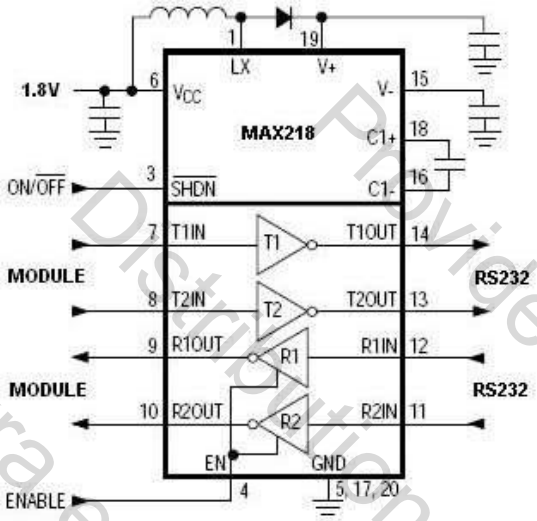

NOTE:
In this case, the length of the lines on the application must be taken into account to avoid problems in the case of high-speed rates on RS232.

The RS232 serial port lines are usually connected to a DB9 connector as shown in Figure 20. Signal names and directions are named and defined from the DTE point of view.

Figure 20: RS232 Serial Port Lines Connection Layout

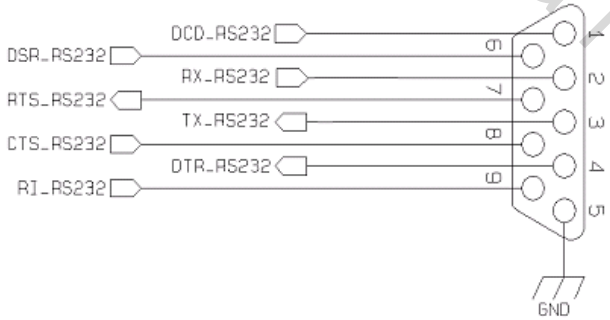

Provided to Dekra under NDA
Distribution is Prohibited except for
Dekra employees with a Need to know

8.3. Peripheral Ports

In addition to the LE940B6 serial ports, the LE940B6 supports the following peripheral ports:

- SPI – Serial Peripheral Interface
- I2C - Inter-integrated circuit
- Ethernet – Ethernet PHY Interface

8.3.1. SPI – Serial Peripheral Interface

The LE940B6 SPI supports the following:

- Master Mode only
- 1.8V CMOS level
- Up to 26 MHz clock rate

NOTE:
SPI is supported only on the Linux side.
The LE940B6 module supports Master mode only and cannot be configured as Slave mode.

Table 28: SPI Signals

PAD	Signal	I/O	Function	Type	Comment
P19	SPI_CLK	O	SPI clock output	1.8V	
M19	SPI_MISO	I	SPI data Master input Slave output	1.8V	
K19	SPI_MOSI	O	SPI data Master output Slave input	1.8V	
N18	SPI_CS	O	SPI chip-select output	1.8V	

Figure 21: SPI Signal Connectivity

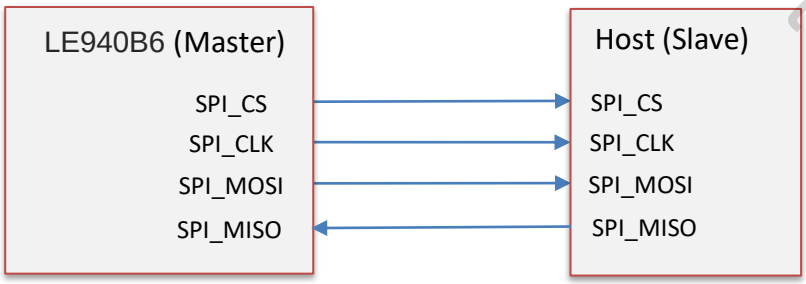

Provided to Dekra under NDA
Distribution is Prohibited except for
Dekra employees with a Need to know

8.3.2. I2C - Inter-integrated Circuit

The LE940B6 I2C is an alternate function of GPIO 1-15 pins. Available only from Modem side as SW emulation of I2C on GPIO lines. Any GPIO can be configured as SCL or SDA. LE940B6 supports I2C Master Mode only.

NOTE:
SW emulated I2C on GPIO lines is supported only from the modem side. For more information, refer to Ref 1: LE940B6 AT Command Reference Guide for command settings.

8.4. Ethernet Interface

The LE940B6 has an integrated Ethernet interface to an external Ethernet PHY supporting 10M / 100M and 1G speed modes via a RGMII interface.

The Ethernet interface is target to be compliant with the RGMII and RMII specifications. The supported RGMII and RMII specification versions are:

- RGMII: Version 1.3, dated 12/10/2000, supporting up to 1000 Mbps operation
- RMII: Version 1.2, dated 03/20/1998, supporting up to 100 Mbps operation

NOTE:
Make sure to design the Ethernet interface carefully depending on the PHY chipset; contact Titan R&D for more details and guidelines.

Table 29: Ethernet Interface

PAD	Signal	I/O	Function	Type	Comment
G14	MAC_MDC	O	Management Data Clock	2.5/3.3V	
G12	MAC_MDIO	I/O	Management Data I/O	2.5/3.3V	
V16	MAC_TXD[0]	O	RGMII or RMII TXD[0]	2.5/3.3V	
T16	MAC_TXD[1]	O	RGMII or RMII TXD[1]	2.5/3.3V	
R16	MAC_TXD[2]	O	RGMII TXD[2]	2.5/3.3V	
N16	MAC_TXD[3]	O	RGMII TXD[3]	2.5/3.3V	

Provided to Dekra Under NDA
Distribution is Prohibited except for
Dekra employees with a Need to Know

PAD	Signal	I/O	Function	Type	Comment
L16	MAC_GTX_CLK	O	RGMII Transmit Clock	2.5/3.3V	
G16	MAC_TXEN_ER	O	RGMII Transmit Enable /Error or RMII Transmit Enable	2.5/3.3V	
AL16	MAC_RXD[0]	I	RGMII or RMII RXD[0]	2.5/3.3V	
AJ16	MAC_RXD[1]	I	RGMII or RMII RXD[1]	2.5/3.3V	
AG16	MAC_RXD[2]	I	RGMII RXD[2]	2.5/3.3V	
AE16	MAC_RXD[3]	I	RGMII RXD[3]	2.5/3.3V	
AC16	MAC_RX_CLK	I	RGMII Receive Clock	2.5/3.3V	
X16	MAC_RXDV_ER	I	RGMII Receive Data Available/Error or RMII Receive Error	2.5/3.3V	
G10	ETH_INT_N	I	Ethernet PHY Interrupt	2.5/3.3V	
G8	ETH_RST_N	O	Ethernet PHY Reset Output	2.5/3.3V	

Provided to Dekra under NDA
Distribution is Prohibited except for
Dekra employees with a Need to know

8.5. Audio Interface

The LE940B6 module supports analog and digital audio interfaces.

8.5.1. Analog Audio

The LE940B6 module provides an analog audio interface, a single differential input for the audio to be transmitted (Uplink), and a balanced output for the received audio (Downlink). The analog interface is on the following pins:

Table 30: Analog Audio Signals

PAD	Signal	I/O	Function	Type	Comments
B5	EAR1_MT+	AO	Earphone signal output, phase +	Audio	
A4	EAR1_MT-	AO	Earphone signal output, phase -	Audio	
B3	MIC1_MT+	AI	Microphone signal input, phase +	Audio	
A2	MIC1_MT-	AI	Microphone signal input, phase -	Audio	
G6	MICBIAS	AO	Microphone bias is 1.9~2.2V	Power	

An application note will be prepared for detailed audio settings.

8.5.2. Digital Audio

The LE940B6 module can be connected to an external codec through the digital interface.

The product provides a single Digital Audio Interface (DVI) on the following pins:

Table 31: Digital Audio Interface (DVI) Signals

PAD	Signal	I/O	Function	Type	Comments
D11	DVI_WA0	O	Digital Audio Interface (WA0)	B-PD 1.8V	PCM_SYNC
C8	DVI_RX	I	Digital Audio Interface (RX)	B-PD 1.8V	PCM_DIN
D9	DVI_TX	O	Digital Audio Interface (TX)	B-PD 1.8V	PCM_DOUT
C10	DVI_CLK	O	Digital Audio Interface (CLK)	B-PD 1.8V	PCM_CLK

Provided to Dekra under NDA
Distribution is Prohibited except for
Dekra employees with a Need to know

8.6. General Purpose I/O

The general-purpose I/O pads can be configured to act in three different ways:

- Input
- Output
- Alternative function (internally controlled)

Input pads can only be read, reporting digital values (high / low) present at the reading time. Output pads can only be written or queried and set values on the pad output. Alternative function can be internally controlled by LE940B6 firmware and act according to the implementation.

The type of GPIO can be set to Open-drain signaling; default type is CMOS mode.

Table 32: GPIOs

PAD	Signal	I/O	Function	Type	Drive Strength
F9	GPIO_01	I/O	Configurable GPIO	CMOS 1.8V	1 mA
E10	GPIO_02	I/O	Configurable GPIO	CMOS 1.8V	1 mA
F11	GPIO_03	I/O	Configurable GPIO	CMOS 1.8V	3 mA
E12	GPIO_04	I/O	Configurable GPIO	CMOS 1.8V	3 mA
F13	GPIO_05	I/O	Configurable GPIO	CMOS 1.8V	1 mA
E14	GPIO_06	I/O	Configurable GPIO	CMOS 1.8V	3 mA
R18	GPIO_07	I/O	Configurable GPIO	CMOS 1.8V	3 mA
S19	GPIO_08	I/O	Configurable GPIO	CMOS 1.8V	3 mA
U19	GPIO_09	I/O	Configurable GPIO	CMOS 1.8V	3 mA
W19	GPIO_10	I/O	Configurable GPIO	CMOS 1.8V	3 mA
L18	GPIO_11	I/O	Configurable GPIO	CMOS 1.8V	3 mA
J18	GPIO_12	I/O	Configurable GPIO	CMOS 1.8V	3 mA
AN4	GPIO_20	I/O	Configurable GPIO	CMOS 1.8V	3 mA
H1	GPIO_21	I/O	Configurable GPIO	CMOS 1.8V	3 mA
K1	GPIO_22	I/O	Configurable GPIO	CMOS 1.8V	4 mA

Provided to Dekra under NDA
Distribution is Prohibited except for
Dekra employees with a Need to know

NOTE:
To avoid a back-powering effect, it is recommended to avoid having any HIGH logic level signal applied to the digital pins of the module when it is powered OFF or during an ON/OFF transition.

NOTE:
LE940B6 GPIOs can also be used as alternate I2C function. Refer to Section 8.3.2, I2C - Inter-integrated Circuit.

Provided to Dekra under NDA
Distribution is Prohibited except for
Dekra employees with a Need to know

8.6.1. Using a GPIO Pad as Input

GPIO pads, when used as inputs, can be connected to a digital output of another device and report its status, provided this device has interface levels compatible with the 1.8V CMOS levels of the GPIO.

If the digital output of the device is connected with the GPIO input, the pad has interface levels different from the 1.8V CMOS. It can be buffered with an open collector transistor with a 10 kΩ pull-up resistor to 1.8V.

8.6.2. Using a GPIO Pad as Output

GPIO pads, when used as outputs, can drive 1.8V CMOS digital devices or compatible hardware. When set as outputs, the pads have a push-pull output, and therefore the pull-up resistor can be omitted.

Figure 22: GPIO Output Pad Equivalent Circuit

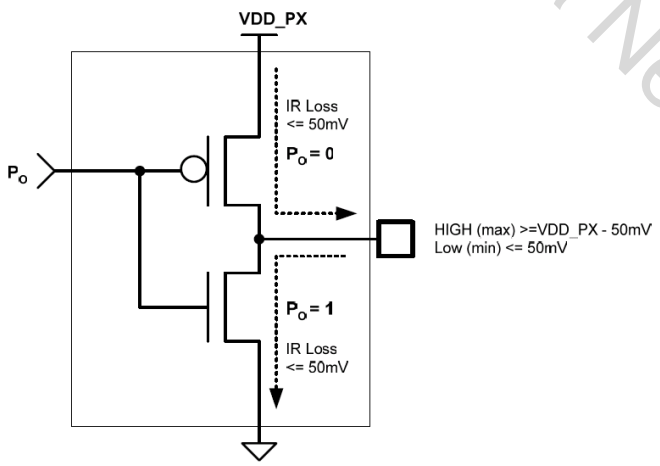

9. Miscellaneous Functions

9.1. Indication of Network Service Availability

The STAT_LED pin status shows information on the network service availability and call status. In the LE940B6 module, the STAT_LED usually needs an external transistor to drive an external LED.

The status indicated in Table 33 is configurable. Refer to Ref 1: LE940B6 AT Command Reference Guide for the full description of this function.

Table 33: Network Service Availability Indication

LED Status	Device Status
Permanently off	Device off
Fast blinking (Period depends on network condition)	Registered with power saving
Slow blinking (Period 3s, Ton 1s)	Registered with full service
Permanently on	A call is active

Figure 23: Status LED Circuit Example

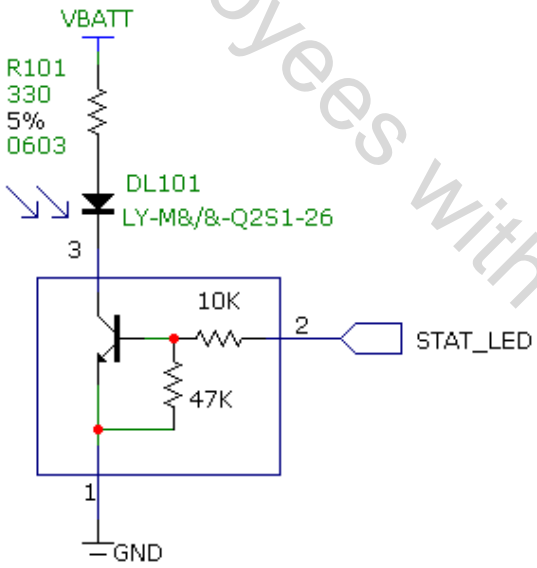

9.2. RTC – Real Time Clock

The VRTC pin is used to power the RTC only when the main battery voltage level is too low or missing.

Provided to Dekra under NDA
Distribution is Prohibited except for
Dekra employees with a Need to know

9.3. VAUX Power Output

A regulated power supply output is provided to supply small devices from the module. This output is active when the module is ON and goes OFF when the module is shut down. The operating range characteristics of the supply are as follows:

Table 34: Operating Range – VAUX Power Supply

	Min	Typical	Max
Output voltage	1.75V	1.80V	1.85V
Output current			100 mA
Output bypass capacitor (within the module)			1 µF

9.4. ADC Converter

9.4.1. Description

The LE940B6 module provides three on-board 12-bit Analog to Digital converters. Each ADC reads the voltage level applied on the relevant pin, converts it and stores it into a 16-bit word.

Table 35: ADC Parameters

	Min	Max	Units
Input voltage range	0	1.2	Volt
AD conversion	-	12	bits

9.4.2. Using the ADC Converter

An AT command is available to use the ADC function.

The command is AT#ADC=1,2. The read value is expressed in mV.

Refer to Ref 1: LE940B6 AT Command Reference Guide for the full description of this function.

9.5. Using the Temperature Monitor Function

The Temperature Monitor supports temperature monitoring by giving periodic temperature indications, to execute some function at extreme state. If properly set (see the #TEMPMON command in Ref 1: LE940B6 AT Command Reference Guide), it raises a GPIO to High Logic level when the maximum temperature is reached.

Provided to Dekra under NDA
Distribution is Prohibited exceptfor
Dekra employees with a Need to know

9.6. Fuel Gauge (TBD)

The LE940B6 module can optionally support an external Fuel Gauge solution. In this case, an external IC that is capable of measuring the current flow in and out of the module must be added on the carrier board.

Figure 24 shows an example of a typical connectivity of such an external fuel gauge to the LE940B6 module.

Detailed design - TBD

Figure 24: Fuel Gauge Connectivity Example

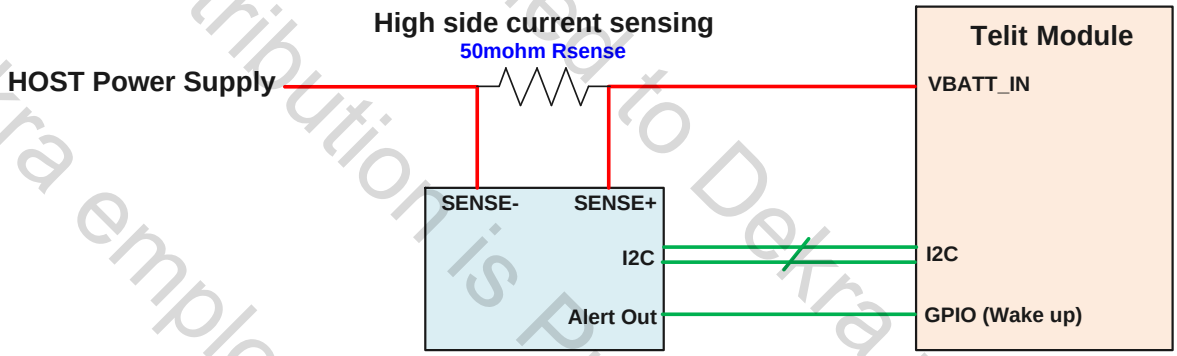

9.7. eFuse

The LE940B6 module needs 1.8 +/- 0.05V applied on Pad VPP(H17) for eFuses to be programmed.

The fuse voltage must be applied to VPP(H17) prior to the fuse script being started, and must be removed after the fuse operation has been completed.

WARNING:
Fuse voltage must never be supplied when the module is not powered up.

Provided to Dekra under NDA
Distribution is Prohibited except for
Dekra employees with a Need to know

10. Mounting the Module on your Board

10.1. General

The LE940B6 module is designed to be compliant with a standard lead-free soldering process as defined in JESD22b102d, table 3b. The number of reflows must not exceed two. This limits Tmax to 245 °C.

10.2. Finishing & Dimensions

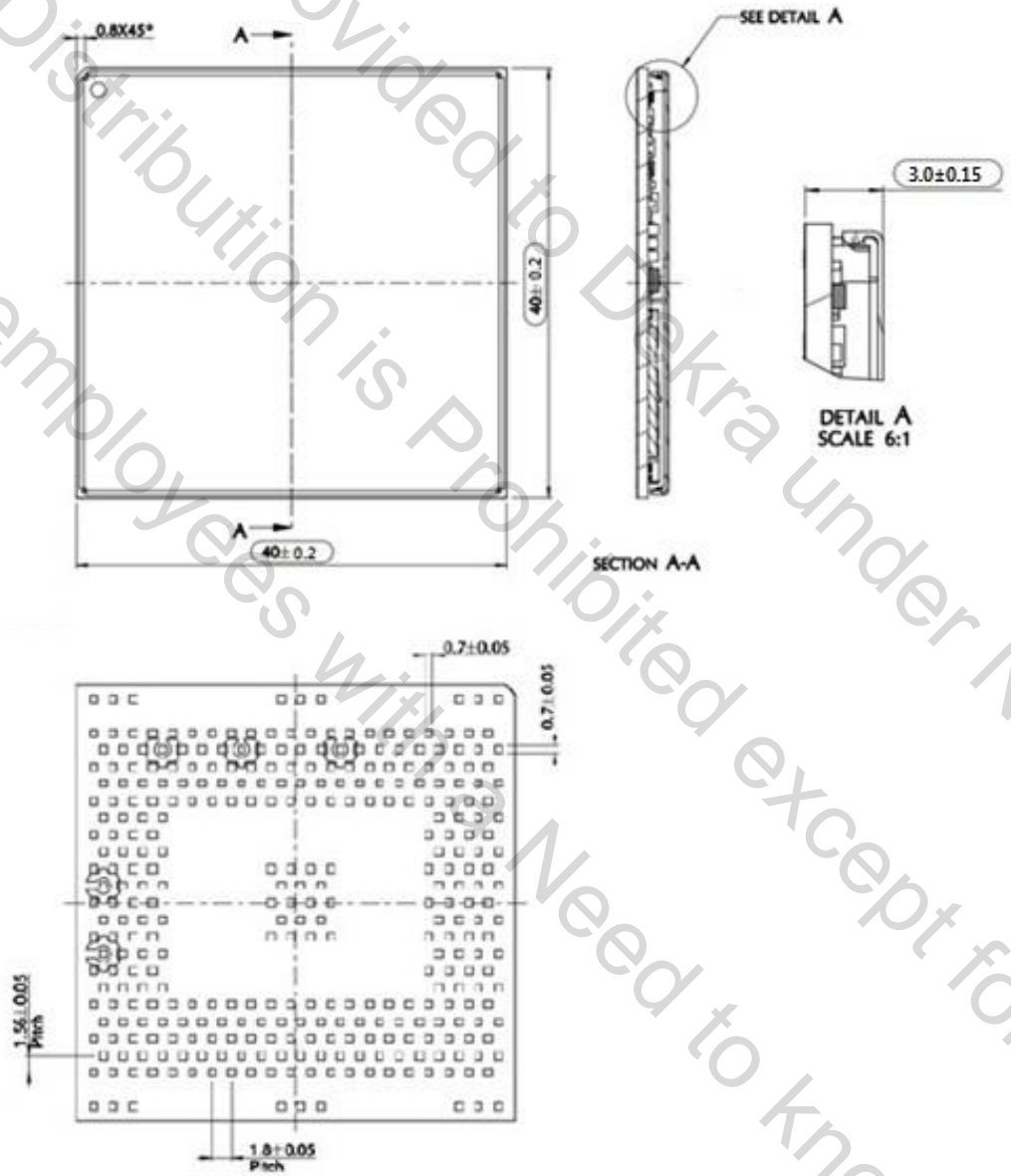

Provided to Dekra under NDA
Distribution is Prohibited except for
Dekra employees with a Need to know

10.3. Recommended Footprint for the Application

Figure 25 shows the top view of the module, which has 334 pads (dimensions are in mm).

To facilitate replacing the LE940B6 module if necessary, it is suggested to design the application board with a 1.5 mm placement inhibit area around the module. These regions are highlighted in Figure 25.

It is also suggested, as a common rule for an SMT component, to avoid having a mechanical part of the application board in direct contact with the module.

NOTE:
In the customer application, the region marked as INHIBIT WIRING in Figure 25 must be clear of signal wiring or ground polygons.

Figure 25: Application Module Top View

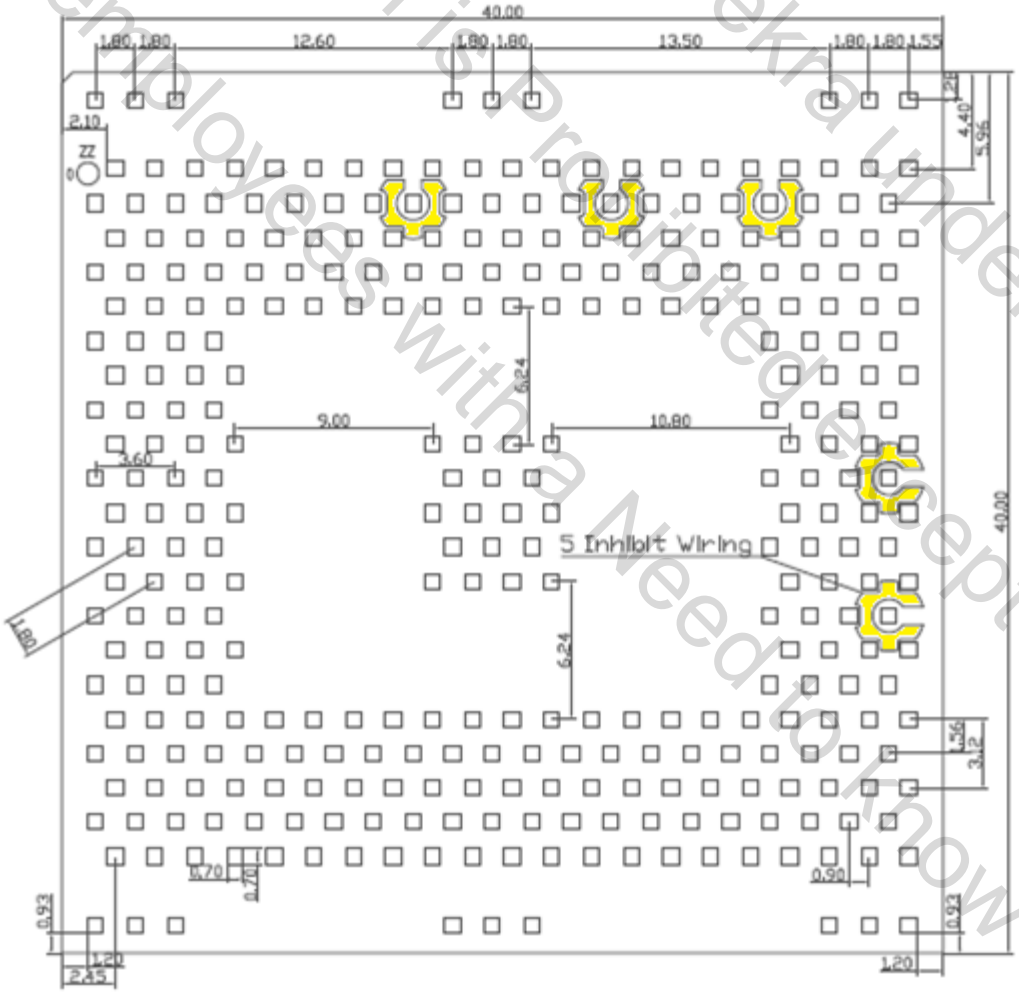

Provided to Dekra under NDA
Distribution is Prohibited except for
Dekra employees with a Need to Know

10.4. Stencil

Stencil's apertures layout can be the same as the recommended footprint (1:1). The suggested thickness of stencil foil is greater than 120 µm.

10.5. PCB Pad Design

The solder pads on the PCB are recommended to be of the Non Solder Mask Defined (NSMD) type.

Figure 26: PCB Pad Design

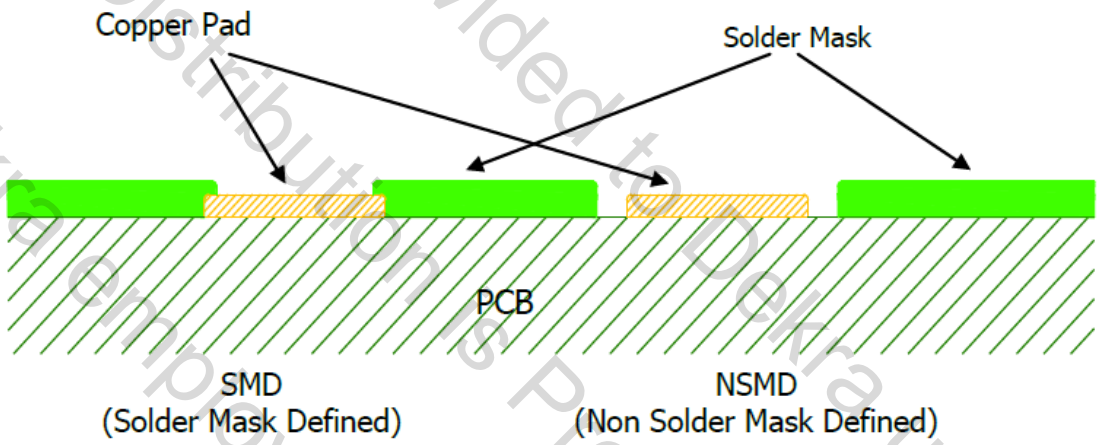

Provided to Dekra under NDA
Distribution is Prohibited except for
Dekra employees with a Need to know

10.6. Recommendations for PCB Pad Dimensions (mm)

Figure 27: PCB Pad Dimensions

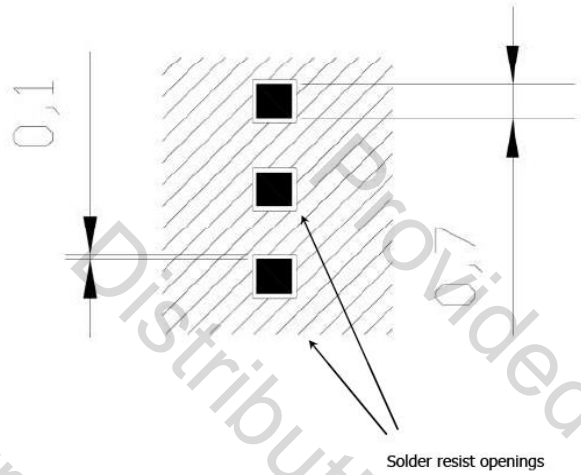

It is not recommended to place around the pads a via or micro-via that is not covered by solder resist in an area of 0.3 mm unless it carries the same signal as the pad itself (see Figure 28).

Figure 28: Inhibit Area for Micro-via

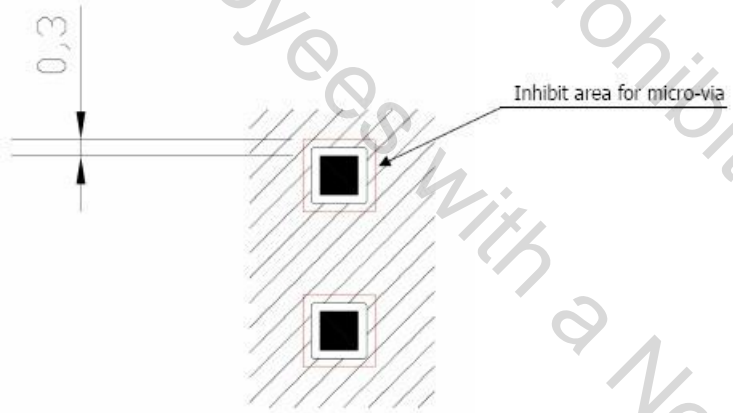

Holes in pad are allowed only for blind holes and not for through holes.

Table 36: Recommendations for PCB Pad Surfaces

Finish	Layer Thickness (um)	Properties
Electro-less Ni / Immersion Au	3-7 / 0.05-0.15	Good solder ability protection, high shear force values

Provided to Dekra under NDA
Distribution is Prohibited except for
Dekra employees with a Need to Know

The PCB must be able to resist the higher temperatures, which occur during the lead-free process. This issue should be discussed with the PCB-supplier. Generally, the wettability of tin-lead solder paste on the described surface plating is better compared to lead-free solder paste.

10.7. Solder Paste

We recommend using only “no clean” solder paste to avoid the cleaning of the modules after assembly.

10.7.1. Solder Reflow

Figure 29 shows the recommended solder reflow profile.

Figure 29: Solder Reflow Profile

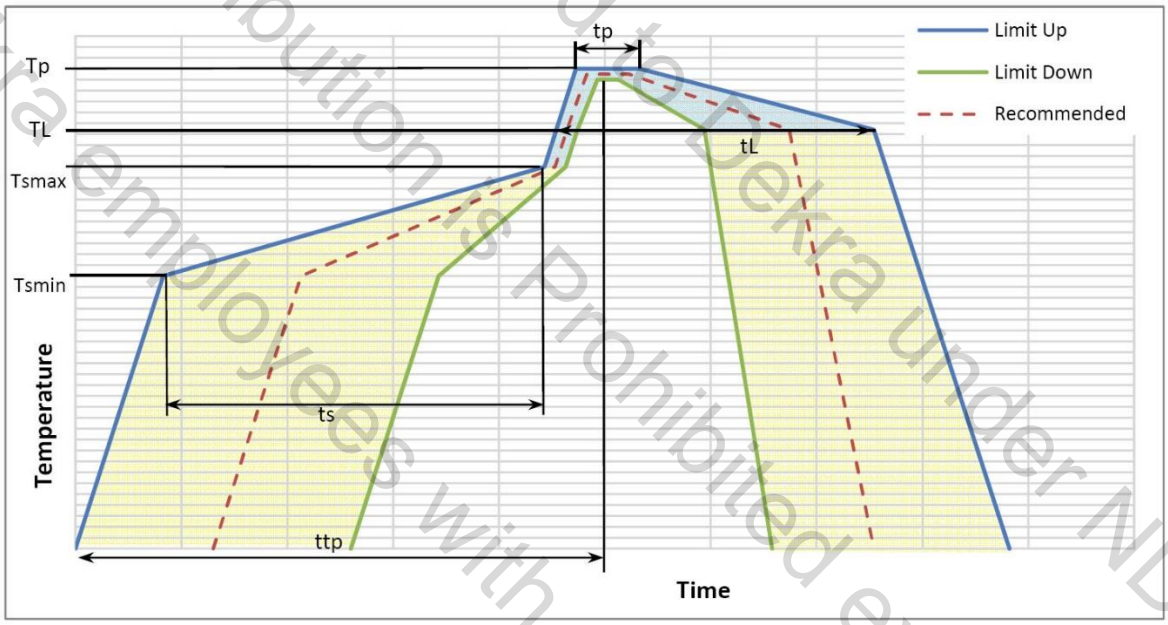

Provided to Dekra under NDA
Distribution is Prohibited except for
Dekra employees with a Need to know

Table 37: Solder Profile Characteristics

Profile Feature	Pb-Free Assembly
Average ramp-up rate (TL to TP)	3°C/second max
Preheat – Temperature min (Tsmin) – Temperature max (Tsmax) – Time (min to max) (ts)	 150°C 200°C 60-180 seconds
Tsmax to TL – Ramp-up rate	 3°C/second max
Time maintained above: – Temperature (TL) – Time (tL)	 217°C 60-150 seconds
Peak temperature (Tp)	245 +0/-5°C
Time within 5°C of actual peak Temperature (tp)	10-30 seconds
Ramp-down rate	6°C/second max
Time 25°C to peak temperature	8 minutes max

NOTE:
All temperatures refer to the top side of the package, measured on the package body surface.

WARNING:
The LE940B6 module withstands one reflow process only.

Provided to Dekra under NDA
Distribution is Prohibited except for
Dekra employees with a Need to know

11. Application Guide

11.1. Debug of the LE940B6 Module in Production

To test and debug the mounting of the LE940B6 module, we strongly recommend to add several test pads on the application board design for the following purposes:

- Checking the connection between the LE940B6 itself and the application
- Testing the performance of the module by connecting it with an external computer

Depending on the customer application, these test pads include, but are not limited to the following signals:

- TXD
- RXD
- ON_OFF_N
- SHUTDOWN_N
- RESET_N
- GND
- VBATT
- VAUX/PWRMON
- TXD_AUX
- RXD_AUX
- USB_VBUS
- USB_D+
- USB_D-
- Signals for analysis

Provided to Dekra under NDA
Distribution is Prohibited except for
Dekra employees with a Need to know

11.2. Bypass Capacitor on Power Supplies

When a sudden voltage step to or a cut from the power supplies is asserted, the steep transition causes some reactions such as overshoot and undershoot. This abrupt voltage transition can affect the device causing it to not operate or to malfunction.

Bypass capacitors are needed to alleviate this behavior. The behavior can appear differently depending on the various applications. Customers must pay special attention to this issue when they design their application board.

The length and width of the power lines must be considered carefully, and the capacitance of the capacitors must be selected accordingly.

The capacitor will also prevent ripple of the power supplies and the switching noise caused in TDMA systems.

Especially, a suitable bypass capacitor must be mounted on the following lines on the application board:

- VBATT & VBATT_PA (Pads AP17,AP19,AR18,AR20,AS17,AS19,AT18,AU17,AU19,AT20)

Recommended values are:

- 100 uF for VBATT & VBATT_PA

Customers must still consider that the capacitance mainly depends on the conditions of their application board.

Generally, more capacitance is required when the power line is longer.

Provided to Dekra Under NDA
Distribution is Prohibited except for
Dekra employees with a Need to know

11.3. SIM Interface

This section presents the recommended schematics for the design of SIM interfaces on the application boards. The LE940B6 supports two external SIM interfaces.

11.3.1. SIM Schematic Example

Figure 30 illustrates in particular how to design the application side and what values to assign the components.

Figure 30: SIM Schematics

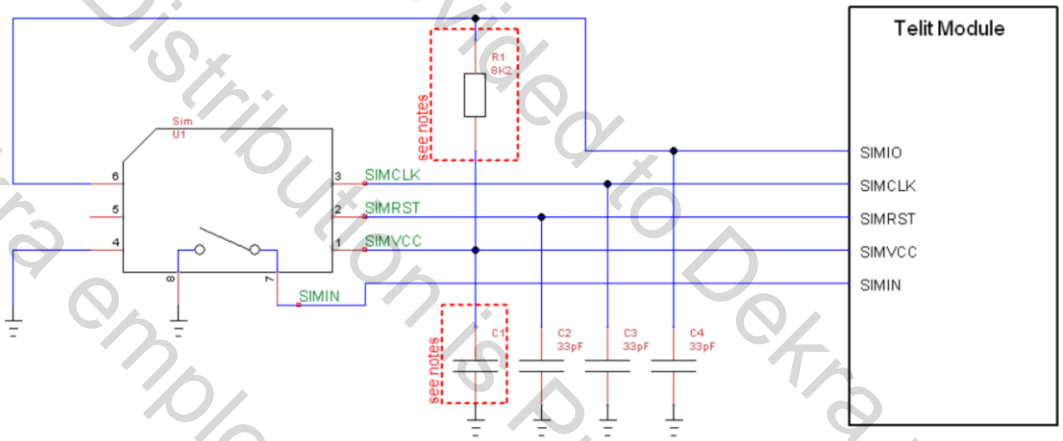

NOTE:
An external pull-up resistor on SIMIO is not required.
The LE940B6 module contains an internal pull-up resistor on SIMIO.

Table 38 lists the values of C1 to be adopted with the LE940B6 product:

Table 38: SIM Interface – C1 Range

Product P/N	C1 Range (nF)
LE940B6	100 nF

Refer to the following document for details:

- Ref 4: SIM Integration Design Guide

Provided to Dekra under NDA
Distribution is Prohibited except for
Dekra employees with a Need to know

11.4. EMC Recommendations

All LE940B6 signals are provided with some EMC protection. Nevertheless, the accepted level differs according to the specific pin. Table 39 lists the characteristics.

Table 39: EMC Recommendations

Pad	Signal	I/O	Function	Contact	Air
Antenna					
AD1, AU9	Antenna pads	I/O	Antenna pads	± 4 KV	± 8 KV

All other pins have the following characteristics:

- HBM JESD22-A114-B ± 1000 V
- CDM JESD22-C101-C ± 250 V

WARNING:
Do not touch without proper electrostatic protective equipment. The product must be handled with care, avoiding any contact with the pins because electrostatic discharge may damage the product.

11.5. Download and Debug Port

This section provides recommendations for the design of the host system used to download or upgrade the Titan software and to debug the LE940B6 module when it is already mounted on a host system.

- For downloading or upgrading the Titan software

  In the LE940B6 module, firmware updates by the host are only possible via USB and not via UART.

  So even if USB interface is not used, it is still highly recommended to place an optional USB connector on the application board.At the minimum, test points of the USB signals are required to enable SW update.

- For debugging the LE940B6 module

  USB, Auxiliary UART and JTAG interfaces can be used for debugging the LE940B6 module. Even if USB or JTAG are not used for debugging, it is recommended to have at least the Auxiliary UART pins exposed to the outside for debugging purposes.

Provided to Dekra under NDA
Distribution is Prohibited except for
Dekra employees with a Need to know

11.6. Antenna Detection

The LE940B6 module provides an antenna detection application.

Many automotive applications require to detect if the antenna is shorted to ground or the battery of the vehicle for fault tracing. Basically, antenna detection is performed by means of its DC characteristics, splitting the DC and RF paths.

Refer to Ref 5: Titan - Antenna Detection Application Note.

Provided to Dekra under NDA
Distribution is Prohibited except for
Dekra employees with a Need to know

12. Packing System

The LE940B6 module is packed on trays.

The tray is JEDEC compliant, injection molded antistatic Modified Polyphenylene ether (MPPO). It has good thermal characteristics and can withstand the standard baking temperature of up to 125°C, thereby avoiding the need of handling the modules if baking is required. The trays are rigid, thus providing mechanical protection against transport stress. In addition, they are re-usable and so environmentally sustainable.

There are 2 (two) antistatic rubber bands that enclose each envelope.

The carton box is rigid, thus offering mechanical protection. The carton box has one flap across the entire top surface. It is sealed with tape along the edges of the box.

Table 40: Tray Packing

Modules per Tray	Trays per Envelope	Modules per Envelope	Envelopes per Carton Box	Modules per Box
21	5+ 1 empty	105	4	420

Table 41: Packing Quantities

Order Type	Quantity
Minimum Order Quantity (MOQ)	21
Standard Packing Quantity (SPQ)	420

Provided to Dekra under NDA
Distribution is Prohibited except for
Dekra employees with a Need to know

Each tray contains 24 modules as shown in Figure 31.

Figure 31: Tray Packing

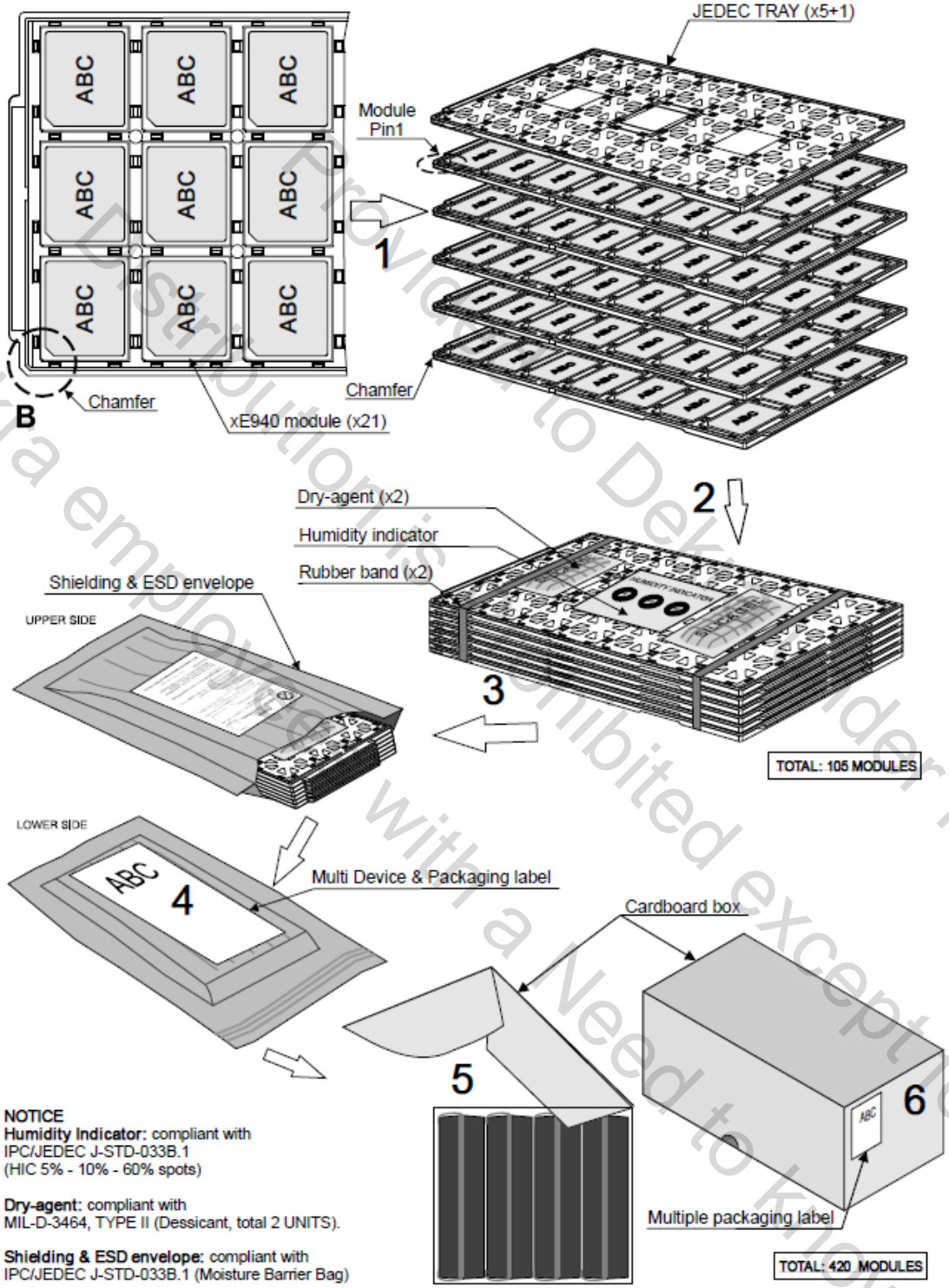

Provided to Dekra under NDA
Distribution is prohibited except for Dekra employees with a Need to know

12.1. Tray Drawing

LE940B6 is packaged on trays. Each tray contains 21 pieces with the following dimensions:

Figure 32: Tray Drawing

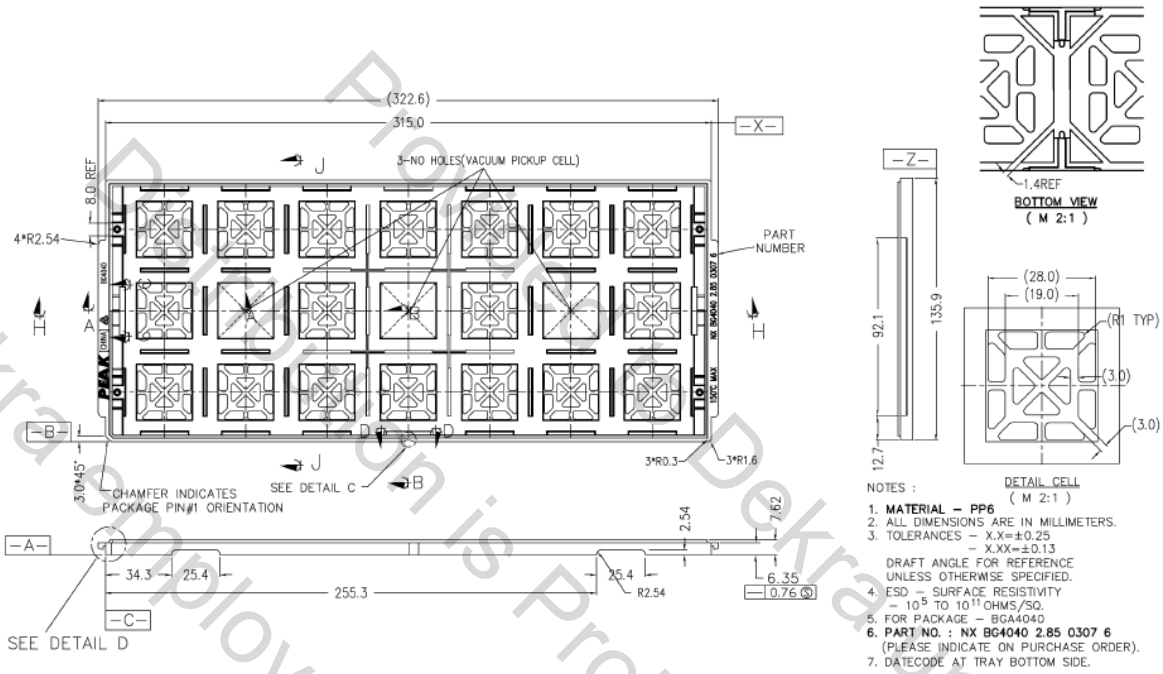

WARNING:
These trays can withstand a maximum temperature of 125°C.

12.2. Moisture Sensitivity

The LE940B6 module is a Moisture Sensitive Device Level 3, in accordance with standard IPC/JEDEC J-STD-020. Observe all of the requirements for using this kind of components.

Calculated shelf life in sealed bag: 4 months at <40°C and <90% relative humidity (RH).

Proprietary Dekra under NDA
Distribution is Prohibited except for Dekra employees with a Need to know

13. Conformity Assessment Issues

13.1. FCC/IC Regulatory Notices

Manual Information to the End User

The OEM integrator has to be aware not to provide information to the end user regarding how to install or remove this RF module in the user's manual of the end product which integrates this module. The end user manual shall include all required regulatory information/warning as show in this manual.

CAN ICES-3(B)/ NMB-3(B)

Federal Communication Commission Interference Statement

This device complies with Part 15 of the FCC Rules. Operation is subject to the following two conditions: (1) This device may not cause harmful interference, and (2) this device must accept any interference received, including interference that may cause undesired operation.

This device complies with Industry Canada's licence-exempt RSSs. Operation is subject to the following two conditions:

(1) This device may not cause interference; and

(2) This device must accept any interference, including interference that may cause undesired operation of the device.

Le présent appareil est conforme aux CNR d'Industrie Canada applicables aux appareils radio exempts de licence. L'exploitation est autorisée aux deux conditions suivantes:

(1) l'appareil ne doit pas produire de brouillage, et

(2) l'utilisateur de l'appareil doit accepter tout brouillage radioélectrique subi, même si le brouillage est susceptible d'en compromettre le fonctionnement.

This equipment has been tested and found to comply with the limits for a Class B digital device, pursuant to Part 15 of the FCC Rules. These limits are designed to provide reasonable protection against harmful interference in a residential installation. This equipment generates, uses and can radiate radio frequency energy and, if not installed and used in accordance with the instructions, may cause harmful interference to radio communications. However, there is no guarantee that interference will not occur in a particular installation. If this equipment does cause harmful interference to radio or television reception, which can be determined by turning the equipment off and on, the user is encouraged to try to correct the interference by one of the following measures:

- Reorient or relocate the receiving antenna.

- Increase the separation between the equipment and receiver.

Provided to Dekra under NDA
Distribution is Prohibited except for
Dekra employees with a Need to Know

- Connect the equipment into an outlet on a circuit different from that to which the receiver is connected.

- Consult the dealer or an experienced radio/TV technician for help.

Any changes or modifications not expressly approved by the party responsible for compliance could void the user's authority to operate this equipment. This transmitter must not be co-located or operating in conjunction with any other antenna or transmitter.

Radiation Exposure Statement

This equipment complies with FCC/IC radiation exposure limits set forth for an uncontrolled environment. This equipment should be installed and operated with minimum distance 20 cm between the radiator & your body.

End Product Labeling

When the module is installed in the host device, the FCC/IC ID label must be visible through a window on the final device or it must be visible when an access panel, door or cover is easily re-moved. If not, a second label must be placed on the outside of the final device that contains the following text: *"Contains FCC ID: **2AUEC**LE940B6NA"*, *"Contains IC: **25635**-LE940B6NA."* The grantee's FCC/IC ID can be used only when all FCC/IC compliance requirements are met.

This device is intended only for OEM integrators under the following conditions:

(1) The antenna must be installed such that 20 cm is maintained between the antenna and users,

(2) The transmitter module may not be co-located with any other transmitter or antenna.

(3) To comply with FCC/IC regulations limiting both maximum RF output power and human exposure to RF radiation, the maximum antenna gain including cable loss in a mobile exposure condition must not exceed:

3.0 dBi in Cellular band

3.5 dBi in PCS band

3.5 dBi in AWS band

3.0 dBi in 700 MHz band

4.0 dBi in 2500MHz band

In the event that these conditions cannot be met (for example certain laptop configurations or co-location with another transmitter), then the FCC/IC authorization is no longer considered valid and the FCC/IC ID cannot be used on the final product. In these circumstances, the OEM integrator will be responsible for re-evaluating the end product (including the transmitter) and obtaining a separate FCC/IC authorization.

Provided to Dekra under NDA
Distribution is Prohibited except for
Dekra employees with a Need to know

13.2. RED Regulatory Notices

2014/53/EU Directive

Hereby, Titan Automotive Solutions NV declares that the radio equipment type LE940B6-RW is in compliance with Directive 2014/53/EU.
The full text of the EU declaration of conformity is available at the following internet address:
www.tustitan.com/RED

RF Exposure Information (MPE)

This device has been tested and meets applicable limits for Radio Frequency (RF) exposure. To comply with the RF exposure requirements, this module must be installed in a host platform that is intended to be operated in a minimum of 20 cm separation distance from the user.

OEM/Host manufacturer responsibilities

OEM/Host manufacturers are ultimately responsible for the compliance of the Host and Module. The final product must be reassessed against all the essential requirements of the RED before it can be placed on the EU market. This includes reassessing the transmitter module for compliance with the Radio and EMF essential requirements of the RED. This module must not be incorporated into any other device or system without retesting for compliance as multi-radio and combined equipment.

Antenna Specification

In all cases assessment of the final product must be met against the Essential requirements of the RE Directive Articles 3.1(a) and (b), safety and EMC respectively, as well as any relevant Article 3.3 requirements.

The following antenna was verified in the conformity testing, and for compliance the antenna shall not be modified. A separate approval is required for all other operating configurations, including different antenna configurations.

If any other simultaneous transmission radio is installed in the host platform together with this module, or above restrictions cannot be kept, a separate RF exposure assessment and CE equipment certification is required.

LTE / WCDMA / GSM Antenna

Brand : HNS (HANKOOK Network Solution)

Model Number : WE14-LF-07

Type : Dipole Antenna

Provided to Dekra under NDA
Distribution is Prohibited except for
Dekra employees with a Need to know

Table 42: RED Antenna Specifications

Mode	Band	Antenna Gain (dBi)
LTE	FDD 2100 – B1 FDD 1800+ – B3 FDD 2600 – B7 FDD 900 – B8 FDD 800 – B20 FDD 700 APT – B28	3.5 3.5 4.0 3.0 3.0 3.0
WCDMA	2100 – B1 900 – B8	3.5 3.0
GSM	1800 – B3 900 – B8	3.5 3.0

Waste Electrical and Electronic Equipment (WEEE)

This symbol means that according to local laws and regulations your product and/or its battery shall be disposed of separately from household waste. When this product reaches its end of life, take it to a collection point designated by local authorities. Proper recycling of your product will protect human health and the environment.

Provided to Dekra under NDA
Distribution is Prohibited except for
Dekra employees with a Need to know

14. Safety Recommendations

READ CAREFULLY

Be sure that the use of this product is allowed in your country and in the environment required. The use of this product may be dangerous and must be avoided in the following areas:

- Where it can interfere with other electronic devices in environments such as hospitals, airports, aircrafts, etc.
- Where there is risk of explosion, such as gasoline stations, oil refineries, etc.

It is the responsibility of the user to enforce the country regulations and the specific environment regulations.

Do not disassemble the product; any mark of tampering will compromise the warranty validity.

We recommend following the instructions of the hardware user guides for correct wiring of the product. The product must be supplied with a stabilized voltage source and the wiring conform to the security and fire prevention regulations.

The product must be handled with care, avoiding any contact with the pins because electrostatic discharges may damage the product itself. The same caution must be taken for the SIM, checking carefully the instructions for its use. Do not insert or remove the SIM when the product is in power saving mode.

The system integrator is responsible for the functioning of the final product; therefore, care must be taken of the external components of the module, as well as of any project or installation issue, because of the risk of disturbing the cellular network or external devices or having any impact on safety. Should there be any doubt, refer to the technical documentation and the regulations in force.

Every module must be equipped with a proper antenna with the specified characteristics. The antenna must be installed with care to avoid any interference with other electronic devices and must be installed with the guarantee of a minimum 20 cm distance from a human body. If this requirement cannot be satisfied, the system integrator must assess the final product against the SAR regulation.

The European Community provides some Directives for electronic equipment introduced on the market. All the relevant information is available on the European Community website:

RE Directive (Directive 2014/53/EU) information.

Provided to Dekra under NDA
Distribution is prohibited except for
Dekra employees with a need to know

15. Acronyms

ADC	Analog-to-digital converter
AE	Application-enabled
CABC	Content Adaptive Backlight Control
DAC	Digital-to-analog converter
FDD	Frequency division duplex
GLONASS	Global orbiting navigation satellite system
GNSS	Global navigation satellite system
GNSS	Global navigation satellite system
GPIO	General-purpose input/output
GPRS	General packet radio services
GPS	Global positioning system
GSM	Global system for mobile communications
I2C	Inter-integrated circuit
LTE	Long term evolution
RGMII	Reduced Gigabit media-independent interface
SD	Secure digital
SIM	Subscriber identity module
SMX	SmartMX

Provided to Dekra under NDA
Distribution is Prohibited except for
Dekra employees with a Need to know

SOC	System-on-Chip
SPI	Serial peripheral interface
UART	Universal asynchronous receiver transmitter
UMTS	Universal mobile telecommunications system
USB	Universal serial bus
WCDMA	Wideband code division multiple access
WCI	Wireless Coexistence Interface

Provided to Dekra under NDA
Distribution is Prohibited except for
Dekra employees with a Need to know

16. Document History

Table 43: Document History

Revision	Date	Changes
Rev 2.2	2020-01-10	Replaced Telit logo and name were by Titan ones. FCC and IC ID updated from Telit to Titan.
Rev. 2.1	2018-03-15	Added NCC warning at the last page
Rev. 2.0	2018-01-04	Sec. 3.2 Fixed Table 44: Mandatory Signals Sec. 4.3.3 Deleted 1.2V EMIC Pads
Rev. 1.9	2017-10-24	Sec. 2.5.1 Updated Table 4, RF Bands per Regional Variant Sec. 2.5.2 Updated Table 5, RF Bands Characteristics Sec. 5.3: Fixed figure 7 and 8, Power off timing Sec. 6.1: Updated table 21 LE940B6 Current Consumption Sec. 13.2 Added RED Regulatory Notices
Rev. 1.8	2017-03-24	Sec. 5.1 Added Note Sec. 5.3 Added Note Sec. 6.1: Updated table 21 LE940B6 Current Consumption Sec. 7.5: Added new sub chapter Sec. 13: Added Conformity Assessment Issues
Rev. 1.7	2017-01-25	Sec. 5: Figures and charts revised Sec. 6: Current consumption table updated

Provided to Dekra under NDA
Distribution is Prohibited except for
Dekra employees with a Need to know

Revision	Date	Changes
v. 1.6	2016-11-15	Official Release Sec. 2.7: Updated the Mechanical Specifications Sec. 3.1: Added VPP pin for eFuse Sections 3.1, 3.3, 4.3.6, 8: SD / MMC interfaces were deleted - they are not supported by the chipset vendor. Sec. 5: Updated the specifications and charts of Hardware Commands (Boot-up/Shutdown time, On/Shutdown key hold time) Sec. 5.1: Updated the Power on Hold time. Sec. 5.3.2: Updated the section of Hardware Shutdown Sec. 5.3.3: Updated the Unconditional reset Hold time. Sec. 6.1: Updated Table 21 – Current Consumption in various modes Sec. 6.2.2: Updated the Thermal Design Guidelines Sec. 8.1: USB 3.0 interface is deleted - it is not supported by the chipset vendor. Sec. 8.3.3: WiFi (SDIO) is deleted - it is not supported by the chipset vendor. Sec. 8.6: Table 35 (Additional GPIO) is deleted - it is not supported by the chipset vendor. Sec. 9.7: eFuse section was added. Sec. 11.4: Updated the EMC Recommendations

Provided to Dekra under NDA
Distribution is prohibited except for
Dekra employees with a Need to know

Revision	Date	Changes
Rev. 1.5	2016-09-20	(Interim version) Page 2, Table 1: Updated the Applicability table Sec. 2: Updated the General Product Description Sec. 2.5.1, 2.5.2: Updated the RF bands tables Sec. 3.1: Updated the pin description in the Pin-out table Sec. 4.3: Added tables of logic level specifications Sec. 5: Updated the Turning On and Off trigger times, figures and flow charts Sec. 6.1: Added Table 20 - Power Supply Requirements Sec. 8: Gathered the description of all hardware interfaces into this section Sec. 8.1: Updated note and figure for USB Sec: 8.2: Various updates about the Serial Ports Sec. 8.4: Updates about the Ethernet interface Sec. 8.6: Updated the GPIO drive strength Sec 11.5: Updated the Download and Debug Port section Sec 12: Updated Packing System information
Rev. 1.3	2016-06-22	(Interim version) Sec. 2.4.1: The Storage Temperature range is –40°C ~ +95°C Sec. 3.1: Corrected and Updated the Pin out table (Added GPIO_11/12, MIC_BIAS, VRTC, Removed GPIO_23/24) Sec. 4: Added electrical specifications Sec. 9.4.1: Modified the ADC table Sec. 11.4: Added ESD specifications
Preliminary	2016-03-15	First issue

Provided to Dekra under NDA
Distribution is Prohibited except for
Dekra employees with a Need to know