# USER MANUAL
# GUIDE DE L'UTILISATEUR
# BEDIENUNGSANLEITUNG
# ISTRUZIONI PER L'USO
# MANUAL DE USUARIO
# GEBRUIKERSHANDLEIDING

**ENGLISH / FRANÇAIS** ..... **4**

# CONTENT

**1**. Specifications ....4
**2**. Safety first ....6
**3**. Welcome, this is **O by Nespresso** ....6
**4**. Machine overview .... 8
**5**. Starting **O by Nespresso** ....10
**6**. Let's connect ....12
**7**. Coffee time ....16
**8**. **O by Nespresso** at a glance ....22
**9**. Cleaning .... 24
**10**. Descaling .... 24
**11**. Emptying .... 26
**12**. Troubleshooting .... 26
**13**. Disposal / Recycling .... 28
**14**. Help .... 30

# 1 SPECIFICATIONS

| O BY NESPRESSO | |
|---|---|
| ∿ | EU: 230 V, 50 Hz, 1170 W<br>US: 120 V, 60 Hz, 1170 W |
| Frequency | 2400 MHz – 2483.5 MHz<br>MaxTransmit Power **Bluetooth**®: + 10 dBm<br>MaxTransmit Power WLAN: + 20 dBm |
| kg | ~ 4.7 kg / 8.8 lbs |
| | 128 mm / 5 in<br>275 mm / 10.8 in<br>332 mm / 13 in |

# 2 SAFETY FIRST

**CAUTION**: Before operating your coffee machine, please refer to the safety instructions leaflet to avoid possible harm and damage.

# 3 WELCOME, THIS IS O BY NESPRESSO

**O by Nespresso** represents the next generation of coffee systems, equipped with enhanced intelligence. With its coffee profiling technology, it can understand the unique character of each **Nespresso** coffee, making it a machine tailored to your tastes. Seamlessly designed, without buttons or knobs, **O by Nespresso** makes for a swift coffee experience, through and through.

This User Manual will tell you everything you need to know to use your **O by Nespresso** machine. To make your coffee moments as simple and enjoyable as possible.

# 4 MACHINE OVERVIEW

1. Capsule slot
2. Coffee nozzle and display
3. Maintenance sensors
4. **Maintenance Module:**
   **4a**. Water tank + lid
   **4b**. Capsule container
   **4c**. Waste Water Container
   **4d**. Front face
5. Cup sensor
6. Pedestal

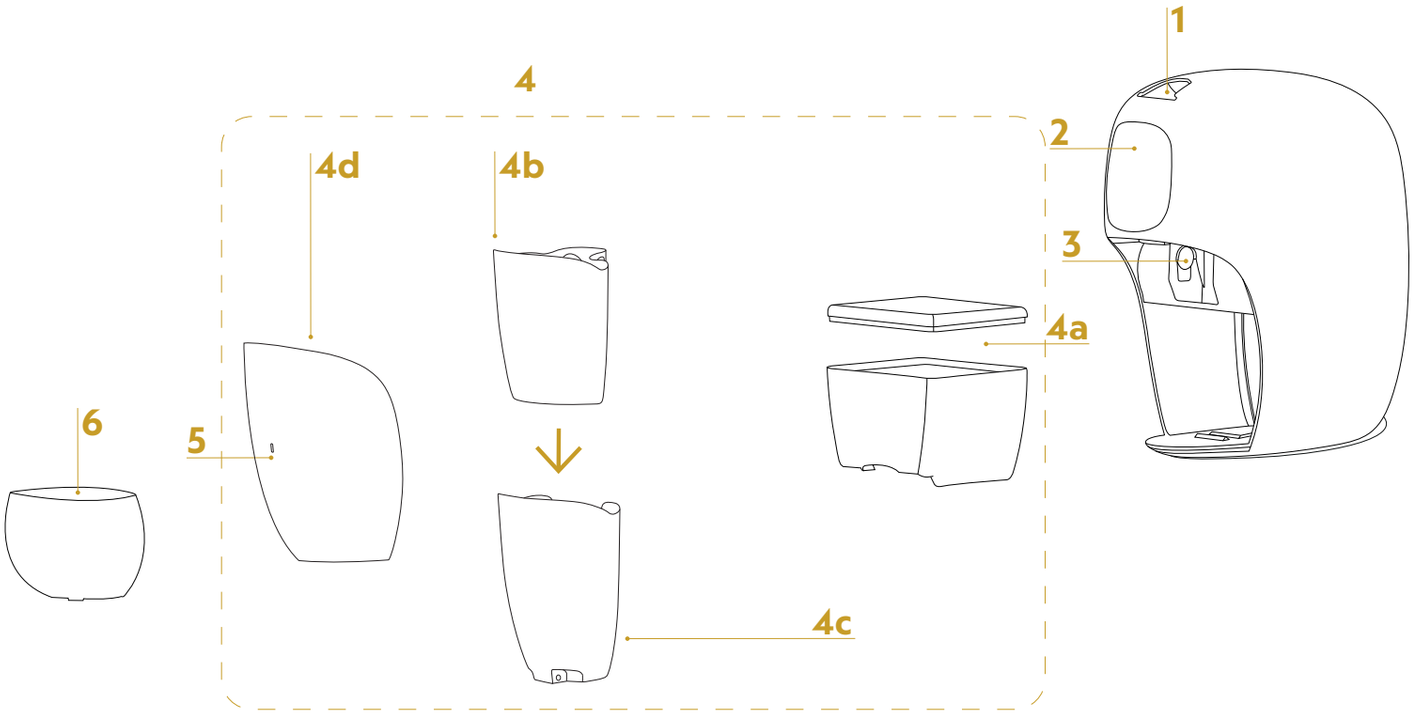

# 5 STARTING O BY NESPRESSO

1. Insert the plug into the power socket. The **Nespresso** logo blinks.
2. Swipe to choose your language.
3. Rinse the water tank.
4. Fill the water tank to the maximum level with fresh and potable water.
5. Place a container (700 ml / 23.7 fl oz.) and activate the rinsing mode. Machine will stop automatically when rinsing is done.
6. Fill the water tank with fresh and potable water.

Your **O by Nespresso** machine is now ready to be connected (see section 6) and to prepare your first coffee.

ⓘ **Water freshness:** the machine will indicate when the water has to be changed.

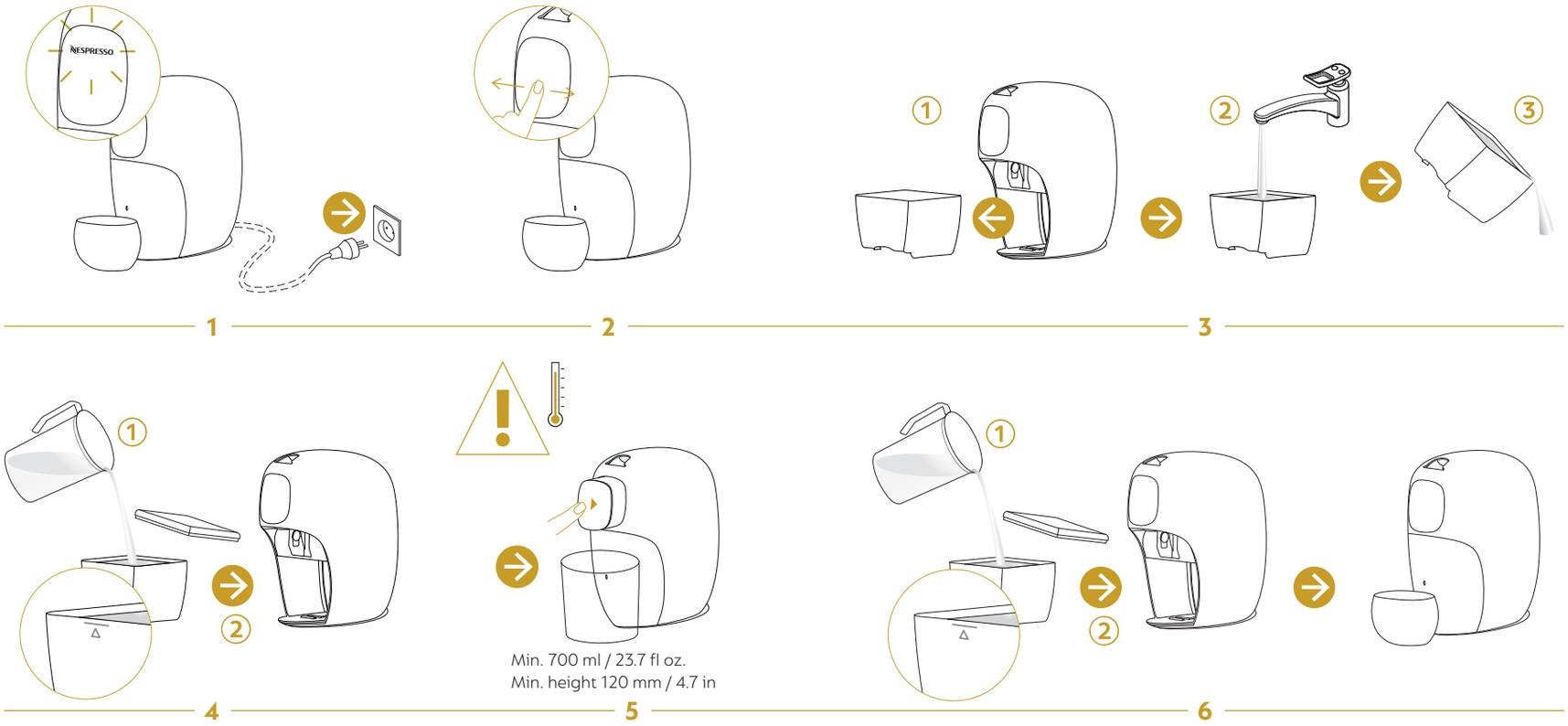

# 6 LET'S CONNECT

**O by Nespresso** has a world of functionalities. To access them all, **O by Nespresso** needs to be connected to the App on your phone.

Because when connected, **O by Nespresso** not only recognises the **Nespresso** capsule you have inserted, it also allows you to define the brewing type you want for your coffee. It gives you information on the different extraction modes and sends you notifications in the App as well as on your machine. And if you need help with anything, the **Nespresso** technical support number is just a swipe away.

Now, simply download your **Nespresso** App to set everything up.
And make the most of a great coffee situation.

## 6.1 Get the App

1. Download the **Nespresso** App. If you already have it, we recommend to update the App to the latest version.
2. Launch the App on your smartphone and swipe on the screen to "Add a machine".

Download on the App Store

GET IT ON Google Play

## 6.2 Pair **O by Nespresso** and connect it to the Wi-Fi

1. Please make sure that:
   - **O by Nespresso** is plugged into the power socket.
   - Your smartphone has **Bluetooth**® turned ON.
   - You are close to **O by Nespresso** while pairing.
   - Your smartphone is connected to Wi-Fi and that you have internet connection.
2. From the **Nespresso** App homepage, click on the Machine icon.
3. Follow instructions on the App. The connection process takes a few minutes. Once the process is completed, a **O by Nespresso** picture will appear on the screen.

## 6.3 Connectivity functions

Now that you are connected, you can enjoy the following settings:

- Select your favorite brewing mode for each capsule.
- Discover the perfect cup size for each coffee in the Expert mode.
- Get the newest **Nespresso** capsules recognized.
- Receive maintenance notifications on your App.
- Get your local **Nespresso** technical support number.
- Find out more via the App.

# 7 COFFEE TIME

Two brewing modes, infinite aromatic possibilities. Thanks to the Expert and the Classic brewing modes, **O by Nespresso** reveals the hidden treasures inside each capsule, in different ways. You can try them both to compare the taste experience.

## 7.1 Prepare your coffee in Expert mode

**Nespresso** Coffee Specialists devised this new coffee profiling technology so that each of the 900 aromas in your capsule ends up right where it should be: in your cup.

The right water to coffee ground ratio is essential to reveal each coffee's full potential. This is why the Expert mode is the suggested brewing mode, and **O by Nespresso**'s default setting.

You can find out which coffee is available in Expert mode and which cup is needed on the Recipe leaflet or on the App.

Here's how to make the most of this brewing mode:

1. Place a capsule to wake up **O by Nespresso**. Touch the display to make your choice. The name of the **Nespresso** coffee will appear on the display.
2. Tap to confirm the inserted capsule name or swipe and tap to choose the right one.

ⓘ Decaffeinato coffees: swipe and make sure to select Decaffeinato.

ⓘ Other: if Other capsule is selected, Classic brewing will apply.

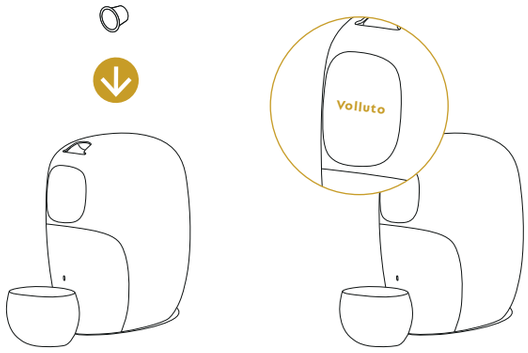


1

3. Confirmed capsule name and brewing mode will appear on the display.
4. Choose a cup according to the coffee size. For all coffees which name is followed by “Lungo”, make sure to have a suitable cup size (minimum 120 ml / 4.1 fl oz). Place your cup, brewing starts.

⚠ If you have a coffee name followed by “Lungo” make sure to have a suitable cup size.

ⓘ It may take few seconds before the coffee flow comes out (due to the Expert brewing profiling). Time varies depending on the coffee variety.

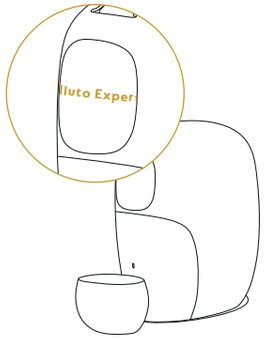


3

## 7.2 Prepare your coffee in Classic mode

If you know your coffee capsule like the back of your hand and prefer its original taste, **O by Nespresso** comes with a Classic brewing mode. This brewing mode makes your coffee the way all **Nespresso** machines do. To activate this setting, you can choose this brewing mode on the App for each individual **Nespresso** coffee. That way you can drink any **Nespresso** coffee, with the flavour you have always known.

Change of heart? To match your mood or offer a different experience to your guests, you can choose between the two brewing modes manually, by swiping on the display.

1. Follow Expert mode (steps 1-2).
2. When the confirmed capsule name and brewing mode appeared on the display: tap or swipe to choose the extraction lenght you prefer. Tap the screen to select.
3. Place your cup, brewing starts.

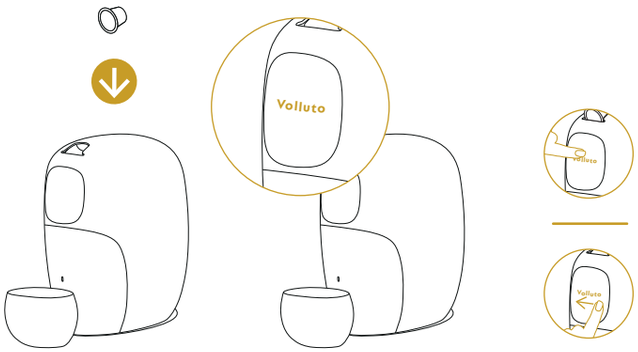





1

## 7.3 Prepare your coffee with Limited Editions coffees

ⓘ Limited Editions coffees are not recognized by the machine. Expert brewing is not available, only Classic. Tap and swipe to select your preferred cup length.

# 8 O BY NESPRESSO **AT A GLANCE**

## WAKE UP **O BY NESPRESSO**

Touch the nozzle OR place a capsule OR place a cup.

ⓘ Placing a cup first will trigger an Expert brewing (or the brewing mode set as default) after inserting and confirming the capsule.

## BREWING MODE

| | CLASSIC MODE | EXPERT MODE |
|---|---|---|
| Top up your coffee | | |
| Stop your coffee | | |

ⓘ In Expert brewing, all parameters including coffee volume are optimized so top up is not allowed.

ⓘ **O by Nespresso** enters auto-off mode after 1 minute of non-use.

## ACCESS TO THE MENU

1. Wake up **O by Nespresso**.
2. Press on the nozzle until the set up message appears.
3. Swipe until you find what you are looking for. The categories are: Display, Factory reset, Classic mode cup length setting, Language, Connectivity, Emptying, Rinsing, Descaling, Help.
4. Touch the screen to select it and follow the machine instructions.
5. Swipe to exit the menu.

# 9 CLEANING

1. Use hot water + odorless non-abrasive detergent and dry with a clean and fresh towel.
2. Before assembling all the parts, please make sure to carefully clean and dry all the 3 indicated parts with a clean and fresh towel.
3. After assembling all the parts, place a cup in front of the machine to let the nozzle out. Please make sure to carefully clean the coffee outlet with a clean and fresh towel.

⚠ Do not immerse the front face (sensor inside).

⚠ Do not scratch the surfaces of the capsule slot, cup sensor and maintenance sensors.

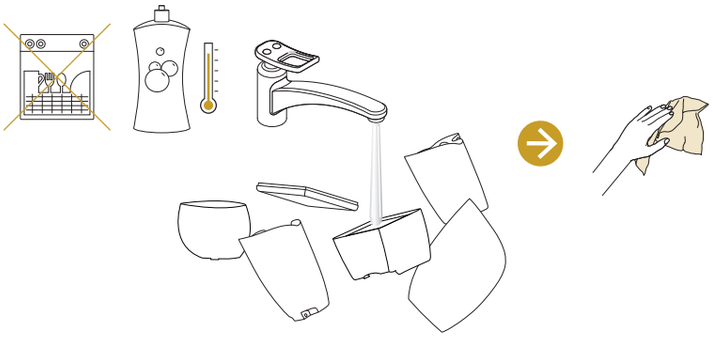

1

# 10 DESCALING

⚠ **The descaling solution can be harmful.** Avoid contact with eyes, skin and surfaces.

ⓘ Approx. 20 minutes

You can activate descaling mode by accessing the settings menu:

- Wake up **O by Nespresso**.
- Press on the display until the set up message appears.
- Swipe until you find “descaling” and touch the screen to select.
- Follow the instructions on the display.

ⓘ **O by Nespresso** indicates when descaling is needed.

# 11 EMPTYING

Emptying the system before a period of non-use and for frost protection, or before transportation.

You can activate emptying mode by accessing the settings menu:

- Wake up **O by Nespresso**.
- Press on the display until the set up message appears.
- Swipe until you find ''emptying'' and touch the screen to select.
- Follow the instructions on the display.

# 12 TROUBLESHOOTING

**1 Pairing has not succeded**

- Check that the **Bluetooth**® on the smartphone is activated.
- Ensure the smartphone is placed next to the machine (max distance 20 cm / 7.8 in) during pairing.
- Make sure not to turn on any microwaves close to the machine during pairing.

**2 If you want to unpair your machine, via the App**

- Go on the App, click on “Machine status”, then click on “Unpair this machine”.
- Click on “Unpair this device” to confirm the unpairing.

**3 O by Nespresso doesn’t wake up (no light indicator)**

- Check the power supply socket, plug, voltage, and fuse.

**4 No coffee, no water**

ⓘ For Expert mode, it may take few seconds before the coffee flow comes out (due to the Expert brewing profiling).

- Water tank is empty; fill water tank with fresh and potable water.
- Descale if necessary; see Descaling section.

**5 Coffee comes out very slowly**

ⓘ For Expert mode, flow speed depends on the coffee variety (due to the Expert brewing profiling).

- Descale if necessary; see Descaling section.

**6 Coffee comes out drop by drop**

- If you are using a Decaffeinato capsule please make sure to select Decaffeinato see section "Prepare your coffee in Expert mode".

**7 Coffee is not hot enough**

ⓘ In Expert Mode, coffee temperature depends on coffee variety / recipe.

- Descale if necessary; see Descaling section.

**8 “Empty capsules container” message**

- Empty capsules container.
- Clean the whole maintenance module with a clean and fresh towel.

| | |
|---|---|
| **9** | **“Replace capsule container” message**<br>• Capsule container is missing. Place it back.<br>• If the message persists, clean the capsule container sensor; see Cleaning section. |
| **10** | **“Place cup” message despite already placed cup**<br>• Clean the cup sensor; see Cleaning section.<br>• Check if the maintenance module is well positioned. |
| **11** | **“Insert capsule” message despite inserted capsule**<br>• Turn the capsule.<br>• Check if the capsule is not damaged or deformed.<br>• Clean the capsule slot; see Cleaning section. |
| **12** | **Capsule is not properly recognized**<br>• Turn the capsule.<br>• Check if the capsule is not damaged or deformed.<br>• Clean the capsule slot; see Cleaning section. |
| **13** | **‘’Fill water tank’’ message**<br>• Check if water tank is filled until max. level.<br>• Check if water tank is properly inserted. |
| **14** | **Brewing starts without a placed cup or capsule**<br>• Clean the cup sensor and capsule slot; see Cleaning section. |

# 13 DISPOSAL / RECYCLING

This appliance complies with the EU Directive 2012/19/EC. Packaging materials and appliance contain recyclable materials. Your appliance contains valuable materials that can be recovered or can be recycled. Separation of the remaining waste materials into different types facilitates the recycling of valuable raw materials. Leave the appliance at a collection point. You can obtain information on disposal from your local authorities. To know more about **Nespresso** sustainability strategy, go to **www.nespresso.com/positive**

# 14 HELP

**AT:** 0800 21 62 51

**CH:** 0800672703

**FR:** 0 805 11 05 10

**IE:** 1800 81 26 60

**IT:** 800648288

**NL:** 08005800000

**UK:** 0800442442

**US:** 8779646292