WC55
DC CEILING FAN WALL CONTROL (TRANSMITTER)
INSTALLATION AND OPERATION INSTRUCTION

RP | LIGHTING · FANS

READ AND SAVE THESE INSTRUCTIONS

Please read and understand this entire manual before attempting to install or operate the product.
Make sure that all electrical connections comply with local codes, ordinances and the National Electrical Code.
If you are unfamiliar with proper electrical wiring connections, obtain the services of a qualified electrician.

WARNING: Before proceeding, be sure to shut off electricity at main switch or circuit breaker in order to avoid electrical shock.

NOTE: Fan installation must be complete including assembly of blades before testing wall control unit.
Refer to your Ceiling fan instruction manual for safety and installation instructions.
This wall controller is to be used for the control of DC ceiling fan and fan light only, and in an AC120V 60Hz power supply only.

WARNING : Do not exceed maximum rating 5A of the wall transmitter. Install the wall transmitter away from excessive heat or humidity.

IMPORTANT : Before installing the wall transmitter, place it in OFF position by pushing ON/OFF switch to OFF.

Make wiring connections with wire nuts as shown in Fig.1.
- Connect a Black wire(marked AC IN L) from wall transmitter to the Live (Black wire) from house.
- Connect the other Black wire (marked To Motor L) from wall transmitter to Black wire from Receiver (marked AC IN L)
- Connect yellow/green grounded wire to grounded wire from outlet box.

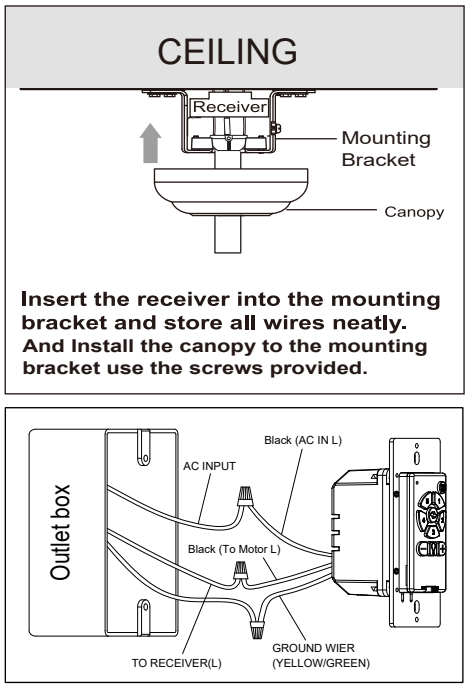

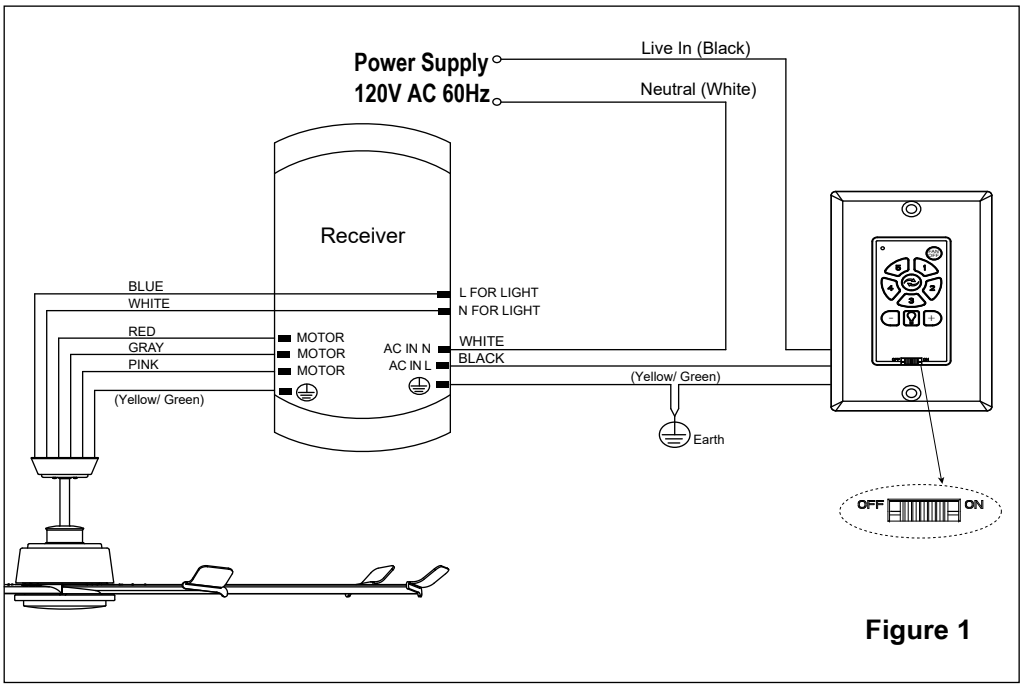

Figure 1

www.rplighting.com | 4931 Paseo Nel Norte NE, Albuquerque, NM 87113 | 800.937.6925

Risk Of Electric Shock

- SHUT OFF POWER AT FUSE BOX OR CIRCUIT BREAKER BEFORE INSTALLATION.

- Install the wall transmitter unit to outlet box using machine screws.
- Remove the top panel from transmitter unit then install 23A 12V battery(included) in wall control, with fan power off (push on-off switch to OFF position).
- Re-attach top panel after installing battery.
- Attach wall plate to wall transmitter unit with screws provided as shown in Fig.2.

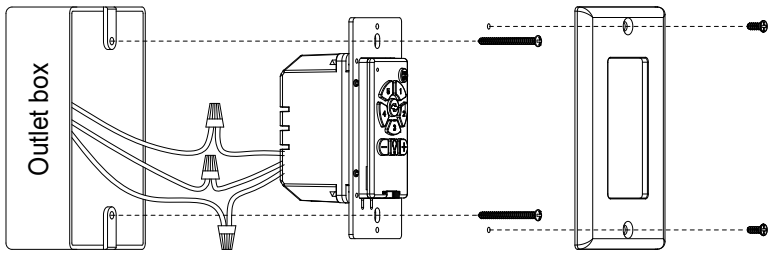

Figure 2

NOTE: Use a 23A 12V battery.
The battery will weaken with age and should be replaced before leaking as this could damage the transmitter.
Remove the battery if not used for long period of time to prevent damage to transmitter.
Keep the battery out reach of children, dispose of the used battery properly.

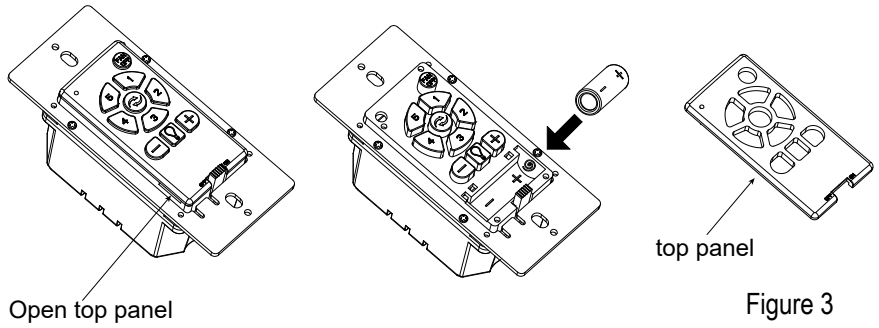

Figure 3

Wall Transmitter Operation

The buttons on the wall transmitter control the fan speed and light as follows.

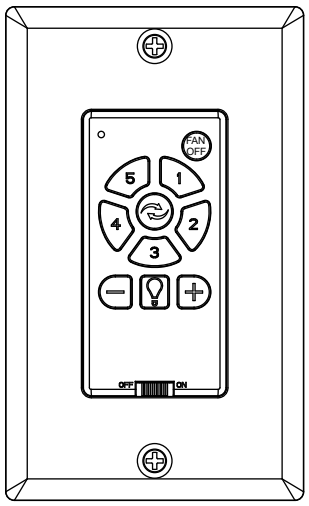

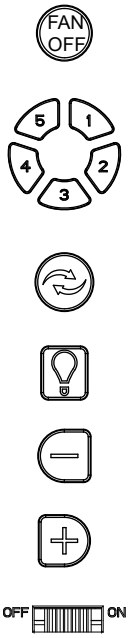

Press the FAN OFF button to turn fan off.

Fan Speed
1- Highest Speed
2- High Speed
3- Med Speed
4- Low Speed
5- Lowest Speed

Forward/ Reverse-
Press this button to get desired airflow direction.
It will take a few seconds for fan to slow down and change rotation direction.

Press this button to turn the light on and off.

Control light level down. Hold this button to dim light.

Hold this button to get light brighter.

Power Slide Switch is to turn power ON or OFF.

NOTE: Dimming function is not available if light kit is not dimmable.

NOTE: The remote controller used on DC ceiling fan model# 1070W and #1080W are not capable of dimming function, when use this remote transmitter with light kit installed to these two models, pressing ⊖ or ⊕ button has no effect.

Code Learning Mode:

The wall transmitter has been pre-paired with the fan for your convenience, however shall you ever need to replace the wall transmitter, follow these simple steps:

1. Within 30 seconds after the receiver is powered ON (connected), press the “FAN OFF” button on the transmitter for 3~4 seconds.
2. The digital paring is complete, you can operate the fan normally.

§ 15.19 Labelling requirements.
This device complies with part 15 of the FCC Rules. Operation is subject to the following two conditions: (1) This device may not cause harmful interference, and (2) this device must accept any interference received, including interference that may cause undesired operation.

§ 15.21 Information to user.
Any Changes or modifications not expressly approved by the party responsible for compliance could void the user's authority to operate the equipment.

§ 15.105 Information to the user.
Note: This equipment has been tested and found to comply with the limits for a Class B digital device, pursuant to part 15 of the FCC Rules. These limits are designed to provide reasonable protection against harmful interference in a residential installation. This equipment generates uses and can radiate radio frequency energy and, if not installed and used in accordance with the instructions, may cause harmful interference to radio communications. However, there is no guarantee that interference will not occur in a particular installation. If this equipment does cause harmful interference to radio or television reception, which can be determined by turning the equipment off and on, the user is encouraged to try to correct the interference by one or more of the following measures:
-Reorient or relocate the receiving antenna.
-Increase the separation between the equipment and receiver.
-Connect the equipment into an outlet on a circuit different from that to which the receiver is connected.
-Consult the dealer or an experienced radio/TV technician for help.

This equipment complies with FCC radiation exposure limits set forth for an uncontrolled environment. This equipment should be installed and operated with minimum distance 20cm between the radiator and your body.