Parabit Systems Inc.

MMR2

Installation and Service Manual

Release: Version 1.3 October 2019

Parabit Systems, Inc.
35 Debevoise Avenue
Roosevelt, NY 11575

NOTICE

Copyright © 2019 by Parabit Systems, Inc.

All rights reserved. No part of the contents of this book may be reproduced or transmitted in any form or by any means without the written permission of the publisher.

Table of Contents

Preface

Intended Audience 1
Trademark Acknowledgments 1
FCC Compliance Statement (United States) 1
How to Use this Guide 2
Conventions Used in this Guide 2
Navigating this Manual as a PDF 3
Contact Us 3

Chapter 1 MMR2 Card Reader Installation

MMR2 Card Reader Installation 5
- Overview 5
- MMR2 Install Diagrams 5

Electrical Installation 8
- MMR2 Wiring 8
  - Wiring the Card Readers and Basic Input Devices 8
  - ACS-1EUL Card Reader and Input Device Wiring 10

Chapter 2 Post-Installation Checks and Testing

Post-Installation Checks 13
- Default Settings 13
- Preliminary Tools and Materials 14
- Preliminary MMR2 Hardware Check 14
- Visual Inspection of the MMR2 Card Reader 15

Post-Installation Testing 15
- Main Card Reader Tests 16
- Additional Test Procedures for the MMR2 Card Reader 17

Troubleshooting 18

This page intentionally left blank.

Preface

Intended Audience

This manual is for technicians trained to install and service Parabit Systems, Inc.® MMR2 card readers.

Trademark Acknowledgments

ACS-1EUL, ACS Enterprise, AFH Service, AVA, AXSView Service, MMR2, and SkimGard are registered trademarks of Parabit Systems Inc. or its subsidiaries in the United States and/or other countries.

Parabit Systems, Inc. and Parabit are trademarks of Parabit Systems Inc. or its subsidiaries in the United States and/or other countries.

All other trademarks and trade names are the property of their respective owners.

FCC Compliance Statement (United States)

This device complies with Part 15 of the Federal Communications Commission (FCC) Rules. Operation is subject to the following two conditions:

This device may not cause harmful interference.

This device must accept any interference received, including interference that may cause undesired operation.

CAUTION:

Changes or modifications to this unit not expressly approved by the party responsible for compliance could void the user's authority to operate this equipment.

This equipment has been tested and found to comply with the limits for a Class B digital device, pursuant to Part 15 of the FCC Rules. These limits are designed to provide reasonable protection against harmful interference in a residential installation. This equipment generates, uses, and can radiate radio frequency energy and, if not installed and used in accordance with the manufacturer's instructions, may cause interference harmful to radio communications.

There is no guarantee, however, that interference will not occur in a particular installation. If this equipment does cause harmful interference to radio or television reception, which can be determined by turning the equipment off and on, the user is encouraged to try to correct the interference by one or more of the following measures:

Reorient or relocate the receiving antenna.

Increase the separation between the equipment and receiver.

Connect the equipment to an outlet on a circuit different from that to which the receiver is connected.

Consult the dealer or an experienced radio or TV technician for help.

The FCC identifier for this device is FCC ID:2AUGM-MMR2.

This device contains FCC Certified RF module with FCC ID: 2AA9B05.

Co-location of this module with other transmitters that operate simultaneously has been evaluated using the FCC multi-transmitter procedures.

How to Use this Guide

This guide provides concise, step-by-step instructions for set-up, configuration, and operation of the ACS-1E and ACS-1EUL systems.

Conventions Used in this Guide

This guide contains the following conventions:

Convention	Example
Screen names, dialog box names, tab names, window names, field names, and menu names appear in bold font.	Click the **Customer** box.
File names are italicized.	*AxsView.Transceiver.Installer.msi*
Steps to be performed in order are numbered and/or lettered.	1. Click **Save and Close** to save the information before closing the dialog box, or click **Cancel** to close the dialog box without saving the information. 2. From the **Login** screen, click **Setup**, and then click **Login**.
Unordered steps are presented in bullets.	• Microsoft® Windows® 7 or greater • Microsoft® Net 3.5 and .Net 3.51
Checkboxes	• To select (enable) a checkbox setting, click in the checkbox. The checkbox has a check mark. • To clear (disable) a checkbox setting, click on the check mark in the checkbox. The checkbox is empty.
Series of menu options to click	Click **Options** > **User Management** > **Add New**

Warnings, **Cautions**, and **Notes** are used to draw immediate attention to matters of importance. The following is a definition of their meanings:

WARNING: INDICATES A POTENTIALLY HAZARDOUS SITUATION THAT, IF NOT AVOIDED, COULD RESULT IN SERIOUS INJURY.

CAUTION: Indicates a hazardous situation that, if not avoided, could result in data loss or product damage.

Note: *Indicates additional information.*

Navigating this Manual as a PDF

This manual includes embedded hyperlinks for quick access to procedures and other sections when viewing the manual as a PDF. Click on any section title or page reference to immediately display that content. Here are some helpful keyboard shortcuts when using the Adobe Reader:

- To return to your previous location in the manual after following a hyperlink, press **Alt+Left Arrow**.
- To return to the hyperlink destination after returning to the previous location, press **Alt+Right Arrow**.
- To open a Search window, press **Ctrl+Shift+F**. Enter your search term in the text field and click Search. Every instance of the search term that appears in the manual will display in the Search window. Click on any of the instances to jump directly to that section.

Contact Us

Parabit Systems, Inc.
35 Debevoise Avenue
Roosevelt, NY 11575

1 (888) 3-PARABIT

This page intentionally left blank.

Chapter 1
MMR2 Card Reader Installation

Follow these instructions to begin installing your MMR2 card reader.

1.1 MMR2 Card Reader Installation 5
1.2 Electrical Installation 8

1.1 MMR2 Card Reader Installation

1.1.1 Overview

The MMR2 uses Near Field Communication (NFC) to read contactless EMV cards and mobile devices as well as magnetic stripe cards.

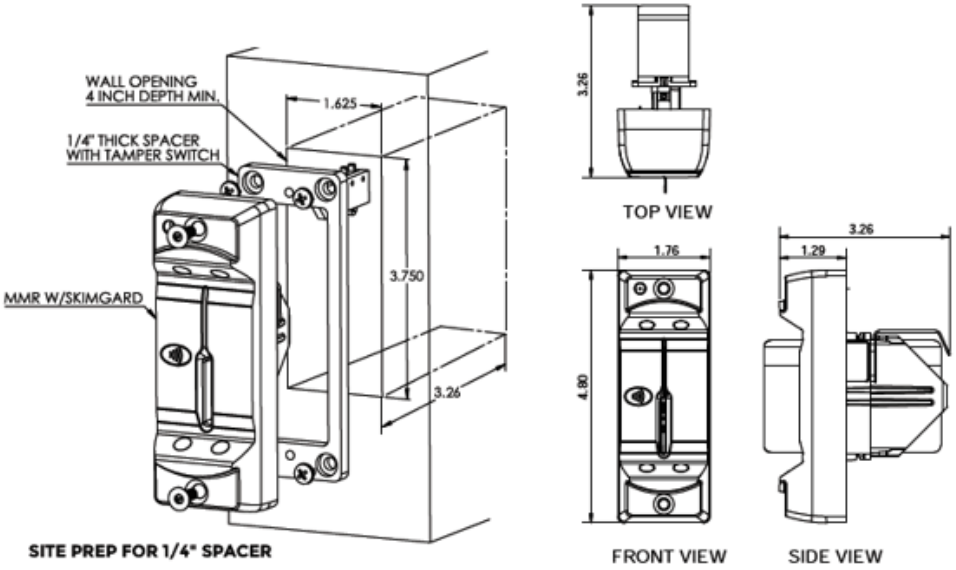

1.1.2 MMR2 Install Diagrams

The drawings on the next 2 pages contain basic installation examples to assist with proper placement of the MMR2 card reader.

Note: *Although the diagrams reference SkimGard (IMSR) readers, these diagrams should be used for MMR and MMR-BT installs, as well.*

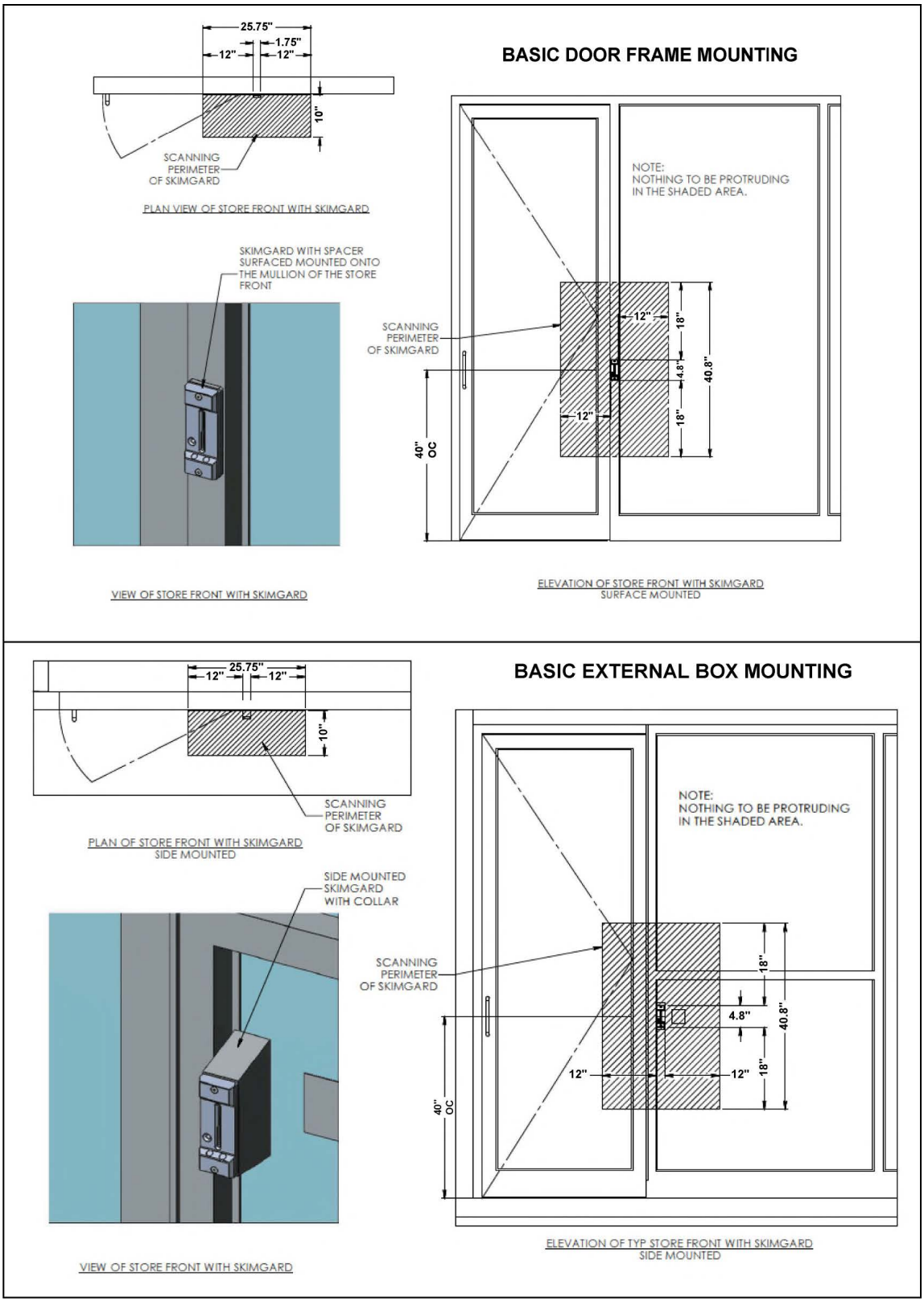

MMR2 Card Reader Installation

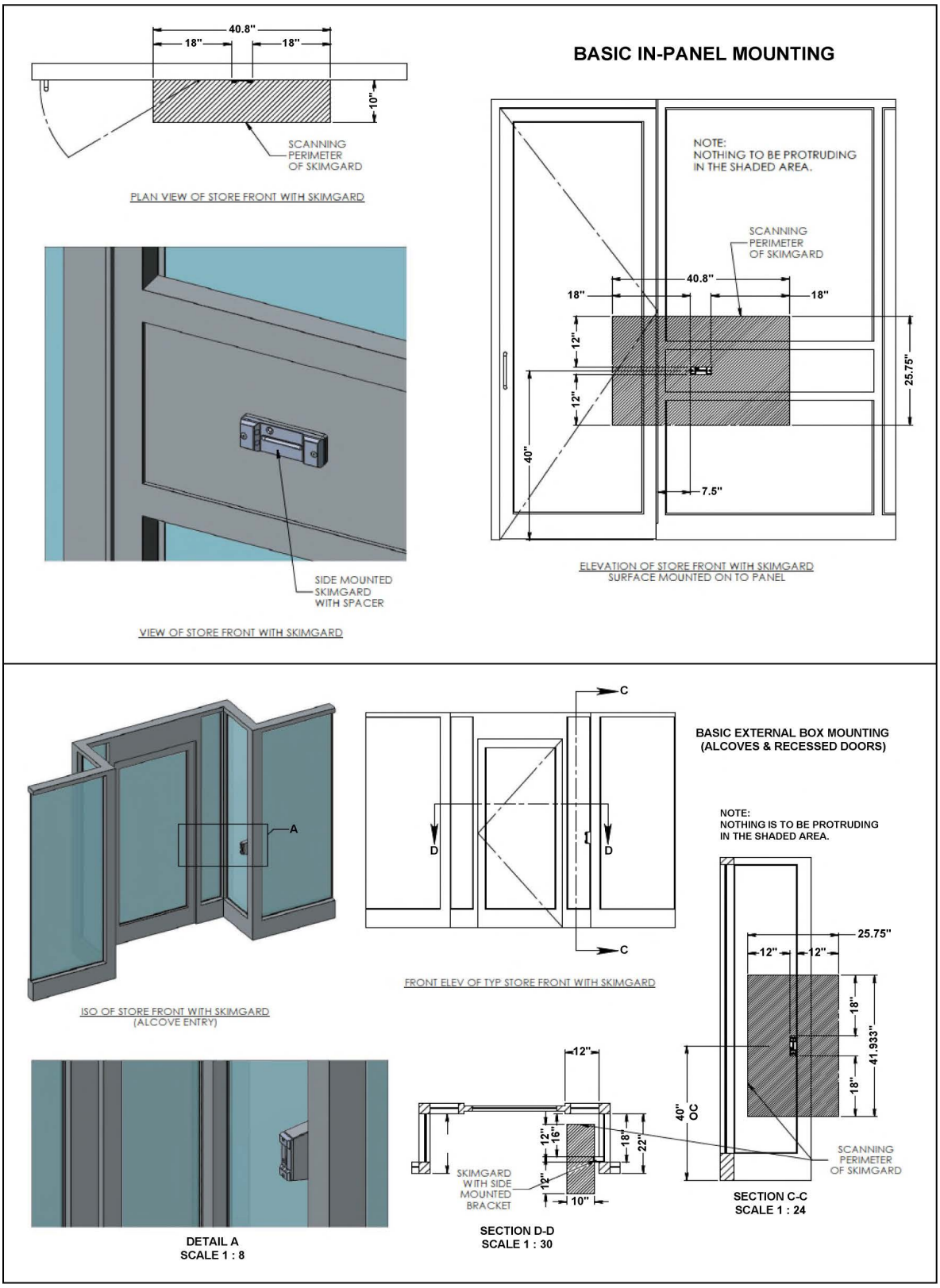

card reader

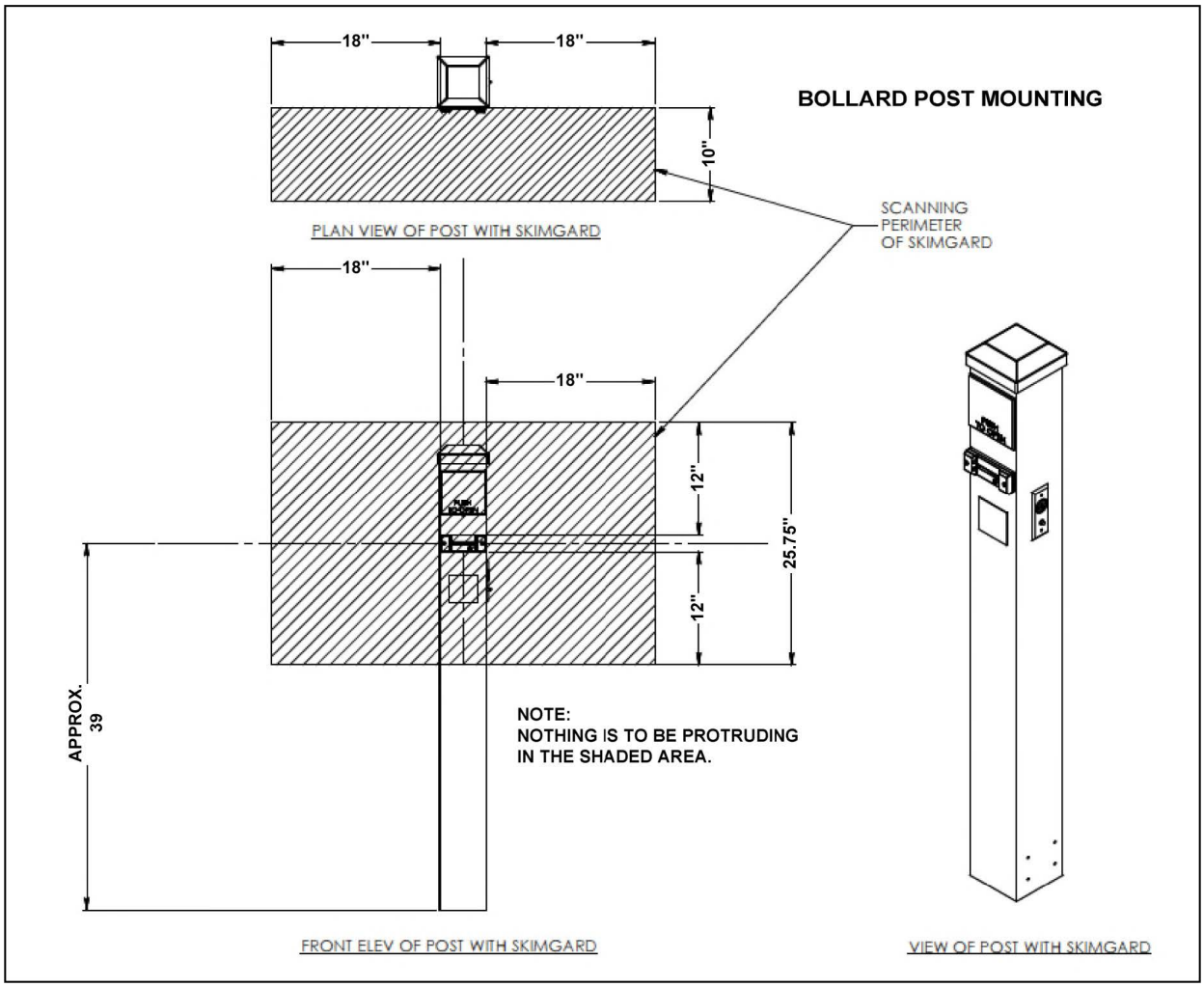

1.2 Electrical Installation

1.2.1 MMR2 Wiring

The wiring for the MMR2, including all of the input and output termination points, is shown in the diagrams on the following pages.

Take care to wire all ends (card reader, circuit boards, door locks and additional power sources) correctly and to label the sheathed cables for input devices (card readers, exit switches, door-sense switches, sensor devices) and output devices (electrical door locks, alarm controllers, etc.). Be sure to make a list of the terminal functions the colored wires are assigned.

1.2.1.1 Wiring the Card Readers and Basic Input Devices

The basic input wiring for the MMR2 card reader is shown in the diagrams below.

Note: *Although certain diagrams reference SkimGard™ / IMSR readers, these diagrams should be used for MMR and MMR-BT installs, as well.*

Note: *The wiring diagram below applies to both the ACS-1E and ACS-1EUL.*

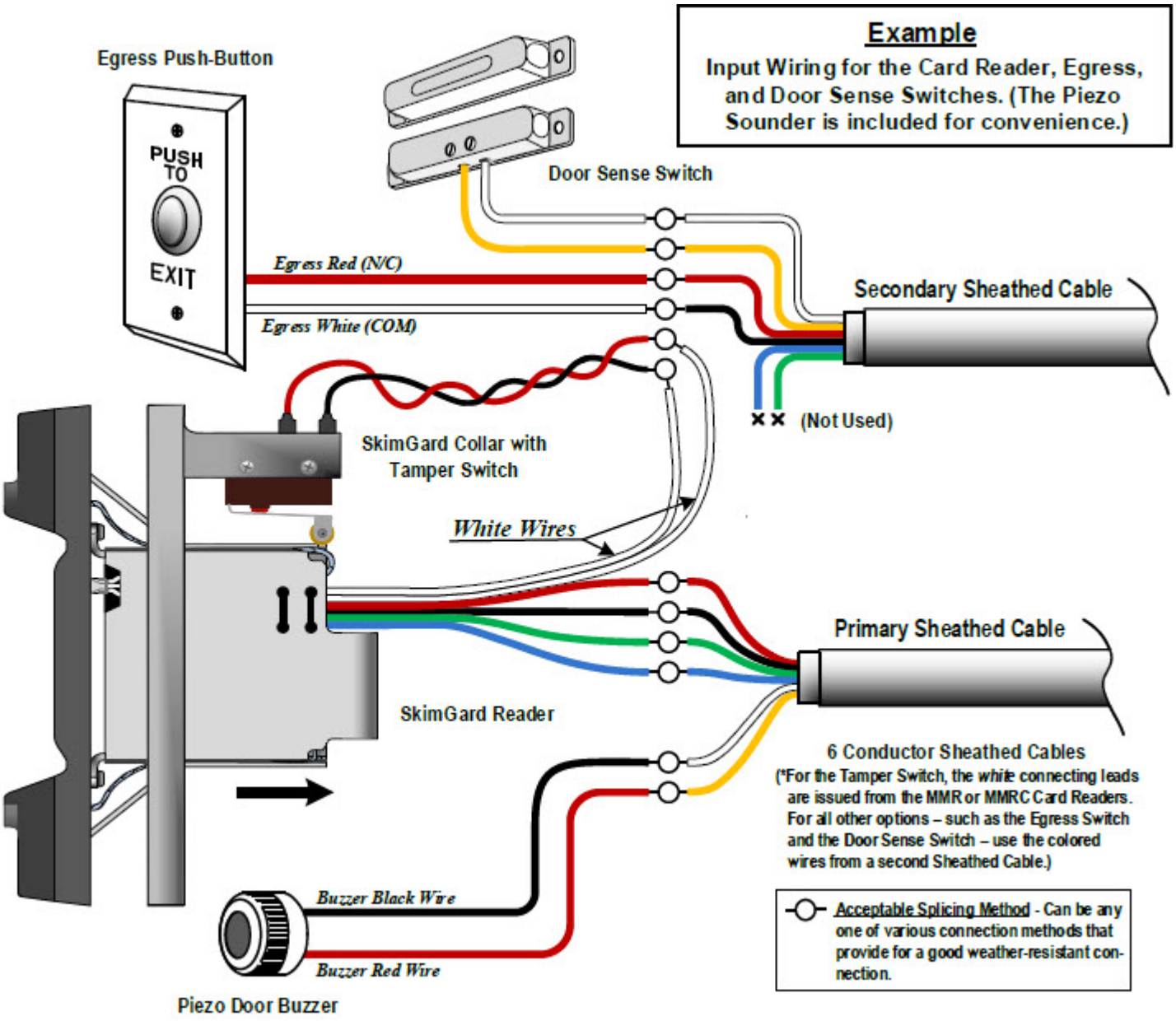

1.2.1.2 ACS-1EUL Card Reader and Input Device Wiring

The other ends of the sheathed cables and their connection to various ACS-1EUL input devices is shown below.

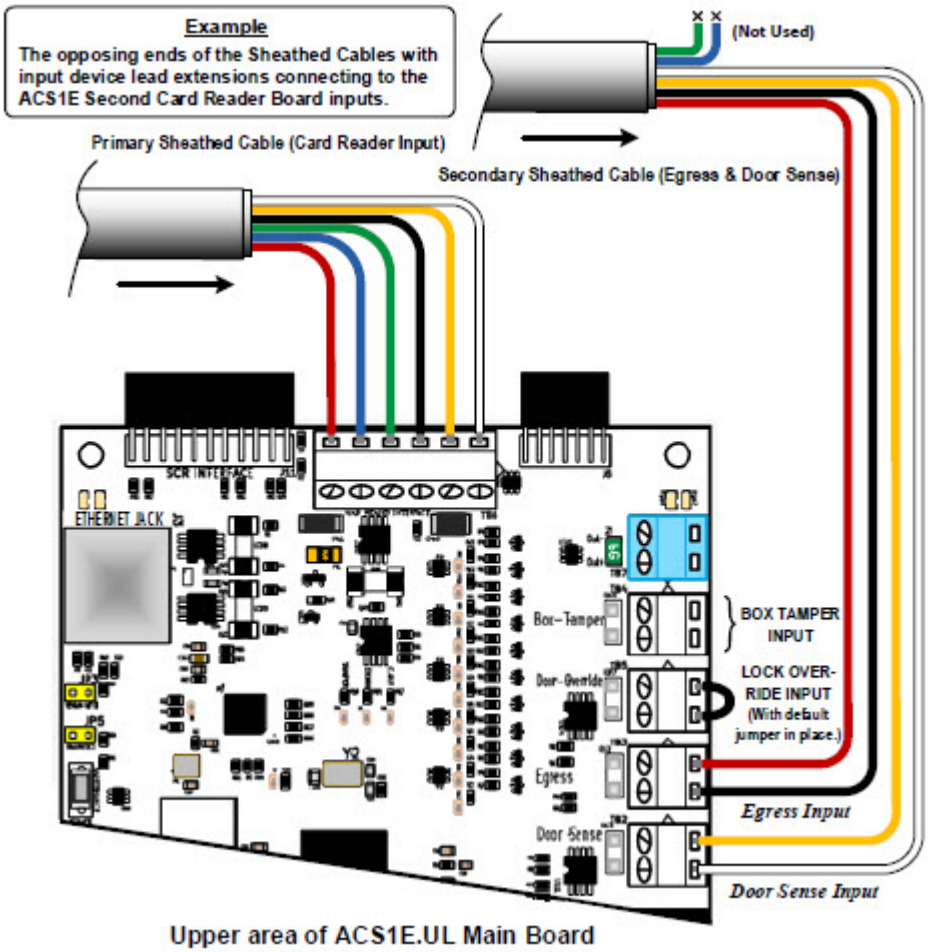

Upper area of ACS1E.UL Main Board
(With Input Device Terminals)

The wiring configuration for the Second card reader board is similar to that of the Controller.

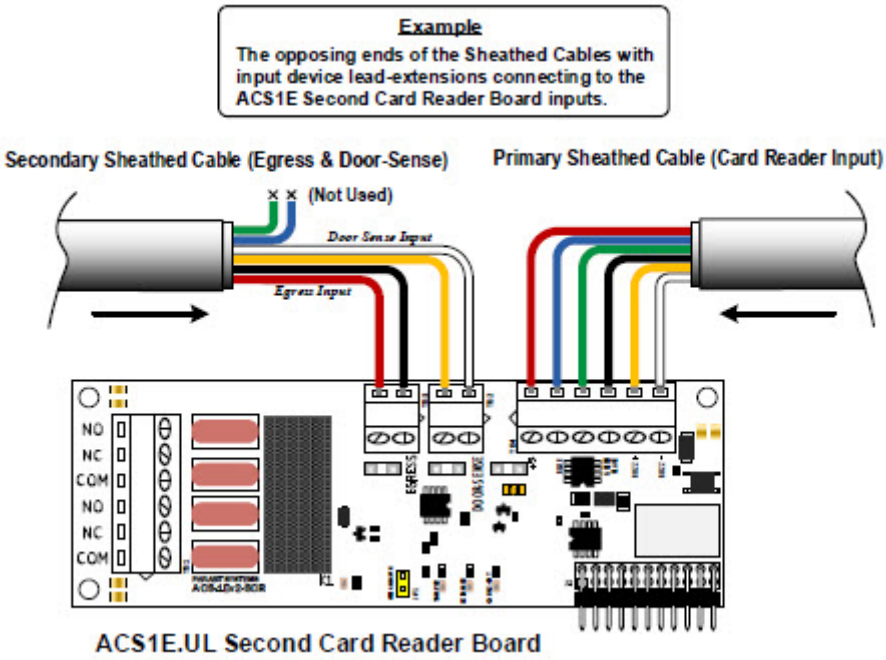

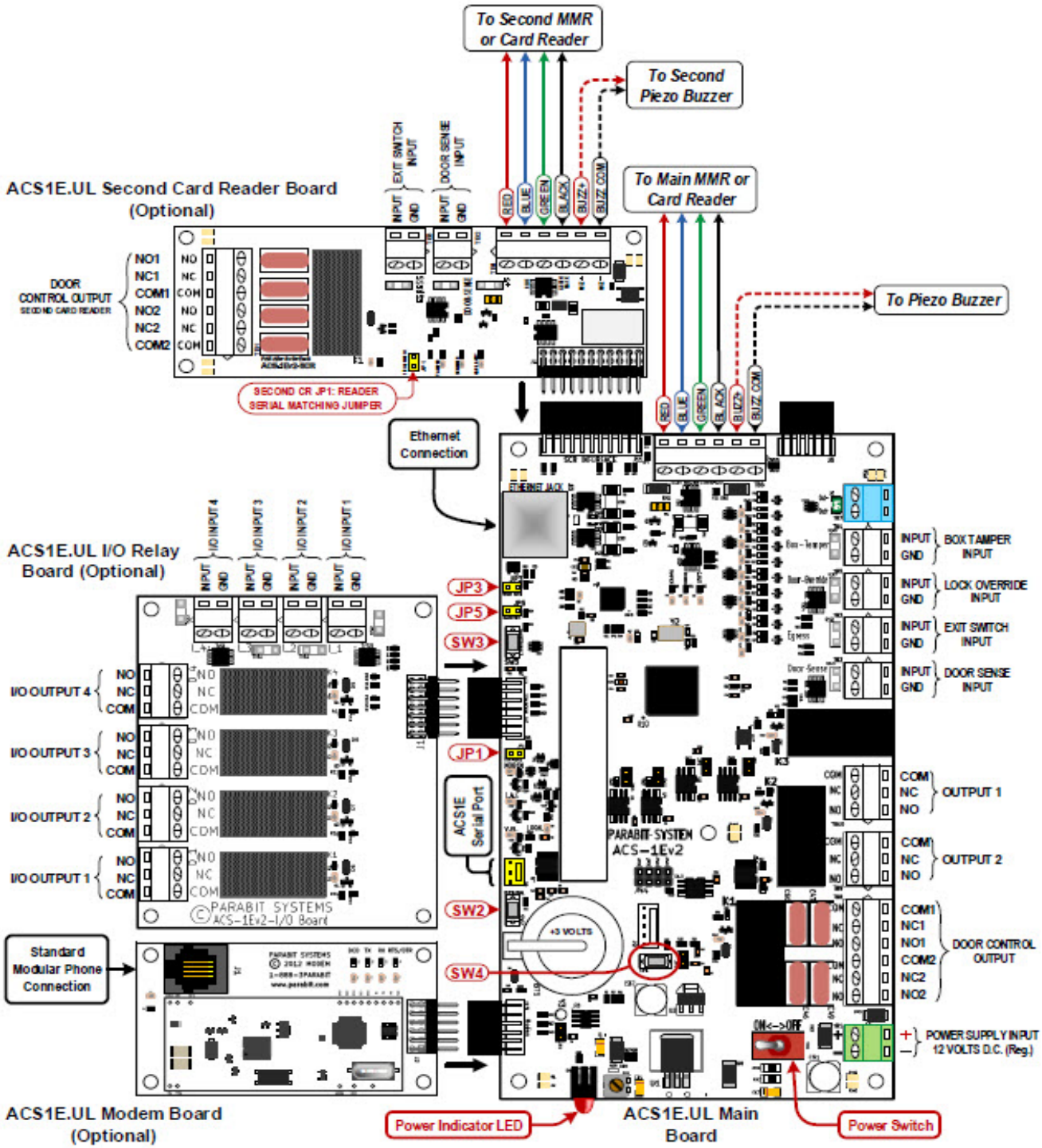

MAIN BOARD JUMPERS	
JP1	DOOR-SENSE STATE (JUMPER = NC)
JP3	READER SERIAL MATCHING JUMPER
JP5	NETWORK BAUD RATE SELECTION

MAIN BOARD PUSH-BUTTONS	
SW2	RS232 SERIAL MODE SELECT
SW3	MAINTENANCE MODE SELECT
SW4	SYSTEM RESET

ACS-1EUL System with Input & Output Sockets and Terminations

Chapter 2
Post-Installation Checks and Testing

This chapter contains information about the Options Menu.

2.1 Post-Installation Checks 13
2.2 Post-Installation Testing 15
2.3 Troubleshooting 18

2.1 Post-Installation Checks

Once the MMR2 card reader has been installed, its functionality must be thoroughly tested.

2.1.1 Default Settings

Each MMR2 leaves the Parabit factory after passing a full set of operational tests. Any test configurations are then removed and the MMR2 is returned to its default configuration.

During testing, the MMR2 card reader(s) are mated to the ACS-1E or ACS-1EUL Controller (and Second Card Reader Board) and checked for operation before boards and readers are separated and packed for shipping. In order to check the initial operation of the ACS-1E Controller, the installer should know the default settings, which are listed in the table below.

TABLE 2–1. Controller Default Settings

Function	Description	Default Settings
BIN Files	NYCE list of acceptable magnetic card numbers.	Inserted in ACS-1E memory for both card reader files with title: "Demo" or "Reduced."
Card Mode	One of five modes which determines how the card reader filters magnetic cards numbers.	Set to mode: "Any Card."
Card Reader Relay Activation Time	Delay time for an active door-control relay after a valid card is read.	5 seconds
Controller Time Zone	Selectable Time Zone	Eastern Standard Time
Daily Schedule	24-hour per day, 7-day per week schedule Map. Card readers can be set to CARD, LOCK, OPEN, or [BLANK].	Card Readers are set to "Card" 24/7. Reader indicator glows amber.
Door Jam Detect Time	Time-value which determines when the Controller will issue a "door open" alert. (Note: available only if door contact is installed.)	60 seconds
Door Sense	Auto-Relock; cuts door-control activation time down to one second when active. (Note: available only if door contact is installed.)	Normally-Closed (NC) with jumper across the terminal block when door sense switch is not required.

TABLE 2–1. Controller Default Settings

Function	Description	Default Settings
Door Sense Jumper (JP1)	Near coin-cell battery and Maintenance Mode push-button. Sets the Door Sense to normally-closed (NC) when in place.	Jumper in place on Door Sense terminal block and on JP1.
Egress (Exit) Switch Input	Input opens door (activate door relay) for selected amount of time.	Normally-Closed (NC); with jumper across the terminal block when Exit switch is not required.
Egress Activation Time	Delay time for an active door-control relay after an Egress switch is activated.	5 seconds
Door Override Input	Activates door-control relay(s).	Normally-Closed (NC); with jumper across the terminal block when Door Override output signal is absent.
Holiday Schedule	Standard holiday schedule file for current years (or next year).	Standard Holiday Schedule in place
Port Number Value	Internet port number value	Port 2000
Sensor Configuration Mapping	Allows configuration of Outputs 1 & 2 (and I/O Relay Outputs), assignment of Card Reader alerts, I/O Inputs, and Inhibit functions.	All assignments are blank
Suspect Card BIN File	System expects: 9999999999999999 string in Stolen Card Binfile or Controller will lock up after first card-read.	9999999999999999 in Stolen Card Binfile
Suspect Card Function	Controller scans up to 50 stolen or "suspected" cards from a small Binfile, locks down the Card Reader(s) and door control relay(s) when a suspected value is detected.	Not selected/activated

2.1.1 Preliminary Tools and Materials

- 1x Small flat-blade screw driver (for wire terminal blocks)
- 1x Medium Phillips screw driver (for circuit board mounting screws)
- 1x Digital Multimeter {DMM} (with Low Resistance range or "Continuity" function)

2.1.2 Preliminary MMR2 Hardware Check

Make sure the white wires from the card readers are properly connected to the white wires of the Tamper-Detect switch in the mounting collar or box. Make sure the card reader is properly seated in its mounting collar or box and the Tamper-detect switch "finger" is depressed.

2.1.1 Visual Inspection of the MMR2 Card Reader

Conduct the following visual inspection of the card reader assembly by referring to the letters in the diagram and corresponding checks below.

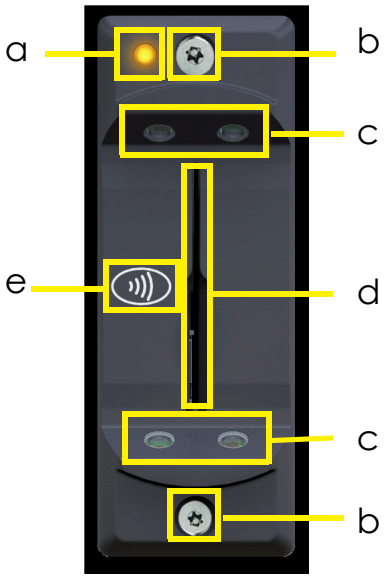

a. LED: Check the presence and color of the LED light indicator.
   - Amber Light - Insert Card
   - Green Light - Door Unlocked
   - Red Light - Door Locked

b. Screws: Parabit-provided security torque screws must be used.

Note: *NEVER use power tools to tighten Card Reader screws.*

c. Sensors: All 4 sensors must be visible with no abnormalities.

d. Card Slot: Check the card slot for foreign objects.

e. NFC Logo: NFC Logo must be present and positioned along the LED side in the direction shown in the picture.

2.2 Post-Installation Testing

Review the diagrams below and complete the tests for the MMR2 card reader.

2.2.1 Main Card Reader Tests

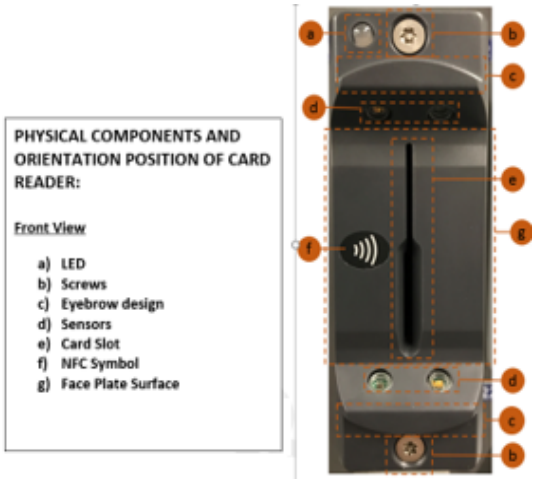

Test Name	Instructions	Component	Observation	Result / Issue / Action
Main Card Reader Test (Track 2 Magnetic Stripe)	Card Read Test: Insert a valid magnetic card in the Main Card Reader and remove it, quickly and smoothly	a. Card Reader LED Indicator b. Door Control relay LED on Main Board (see #18 in Figure 1 or the blue arrow in Figure 3) c. Main Door d. PIEZO BUZZER (if used)	a. Card Reader LED Indicator turns GREEN for 5 Seconds b. Door Control relay LED comes on for the duration c. Main Door unlocks d. PIEZO BUZZER (if used) issues an audible whistle at the Card Reader location.	PASS
		PIEZO BUZZER	Fails to sound off	Check the PIEZO BUZZER lead connections. Tighten the PIEZO BUZZER terminal screws in the 6-circuit terminal block (J10) on the Main Board.
		Card Reader LED Indicator	Turns RED and blinks	Possible DAILY SCHEDULE ERROR or wrong Card Match Mode. Also: Card has a bad magnetic stripe. Try a Second or third card.
		Door Control Relay LED on Main Board (see #18 in Figure 1 or blue arrow in Figure 3)	Fails to activate	Possible corrupted Main Board programming or defective Door Control relay.
	Tamper Alert Test 1: Remove Card Reader mounting screws and slide the Reader out of its mounting collar or box	Tamper LED Indicator on Main Board (see #14 in Figure 1 or #15 in Figure 3)	Glows RED	PASS
			Fails to glow	Defective LED Indicator or defective Reader (fails to transmit digital "Tamper" code.)
	Tamper Alert Test 2: Replace Card Reader into its mounting collar or box and retighten the mounting screws.	Tamper LED Indicator on Main Board (see #14 in Figure 1)	Goes OFF	PASS
			Stays lit	Check Tamper switch on Card Reader mounting frame or box. Check for damaged "white wire" Tamper leads at the Reader and on the Tamper switch.

Test Name	Instructions	Component	Observation	Result / Issue / Action
Main Card Reader Test (Track 2 Magnetic Stripe)	Skim Detector Test 1: Cover the Card Reader faceplate	Skim Activity LED & Skimmer LED	For ACS-1E, Skim Activity RED LED Indicator (see #12 in Figure 1) should come on after 10 -15 Seconds. For ACS-1EUL, Skimmer LED (see #15 in Figure 3) should start blinking after 10-15 seconds. Skimmer LED (see #14 in Figure 1 or #15 in Figure 3) should glow after 30 minutes.	PASS
		Skim Activity LED	Fails to blink after 10-15 seconds. Fails to constantly light up after 30 mins of blinking.	Possible defective Reader (Defective sensors or Reader fails to transmit digital "Skimmer" code).
	Skim Detector Test 2: Uncover the Card Reader faceplate	Skim Activity & Skimmer LED	For ACS-1E, Skim Activity RED LED Indicator (see #12 in Figure 1) should go out after 10 -15 Seconds. For ACS-1EUL, Skimmer LED (see #15 in Figure 3) should go out after 10-15 seconds. Skimmer LED (see #14 in Figure 1 or #15 in Figure 3) should also go out after 10 -15 Seconds.	PASS
	Cable-Cut Test 1: Execute this test from the Controller box. With power ON, lift one of the Card Reader wires from the 6-circuit terminal block at the top of the Main Board	Cable-Cut LED (see #14 in Figure 1 or #15 in Figure 3)	Glows after 10 to 15 Seconds	PASS
			Fails to glow	Possible defective Main Board fails to assert digital "Cable-Cut" alert when Card Reader is disconnected OR Cable-Cut LED is defective.
	Cable-Cut Test 2: Replace the Card Reader wire removed from the 6-circuit terminal block at the top of the Main Board	Cable-Cut LED (see #14 in Figure 1 or #15 in Figure 3)	Goes out immediately after wire is reconnected.	PASS
Second Card Reader Test	Refer to the tests and outcomes for the Main Card Reader and repeat for the Second Card Reader			

2.2.2 Additional Test Procedures for the MMR2 Card Reader

Field technicians installing the MMR2 system should possess a smartphone with a digital wallet installed containing one active credit card.

When planning to perform an MMR2 skim test, a device that operates as an NFC reader is required.

Begin by turning on the ACS-1E or ACS-1EUL controller and performing MMR2 System Configuration. (Assistance from an administrator may be required.)

Then, if the MMR2 reader is newly installed or replaced, perform the serial match operation by shorting the JP6 pins.

Complete the following tests to confirm the normal operation of the MMR2 system.

Test Name	Instructions	Component	Observation	Result / Resolution
MMR Card Reader Test	Accelerator Functionality Test: Connect the white wires if loose or keep the mechanical switch in the closed state. Then Rotate the MMR face plate 90 degrees (landscape to portrait or vice versa) for 10-15 Seconds.	Tamper LED	Confirm the tamper alarm message via the audit trail or with the glowing red tamper LED on the controller. Note: If confirming via the tamper LED, note that the controller will eventually recognize the new face plate position as its default, causing the tamper LED to no longer glow red.	PASS
	Install the MMR module in its final position. Press the maintenance button to place the ACS-1E system in the Card Reader mode (after hours mode).	Card Reader LED	Confirm the amber state of the status LED on the MMR face plate	PASS
	Place the contactless device in front of the MMR face plate. (Repeat with various contactless devices in multiple positions.)	Card Reader LED	Door opens and LED turns green.	PASS
	If testing the MMR Skim feature, place the NFC reader in front of the MMR module for the time equal to MMR Skim count x 4 minutes (recommended: skim count of 5 x 4 minutes = 20 minutes).	N/A	Confirm the NFC skim detect message via the audit trail	PASS

2.3 Troubleshooting

Follow the procedure below to troubleshoot common MMR2 card reader issues.

Is the Card Reader reading cards?

- If **no**, what color is the LED on the reader?
  - Solid red = lock out mode; will not accept any cards
  - Solid amber = card accept mode (see below)
  - Green = on schedule; open
- If the reader is **amber and not reading cards**, remove and wire the reader directly to the controller and test.
  - If the reader **works at the controller**, check your wires at the front and tone out cable for continuity
  - If the reader **does not work at the controller**, replace reader
  - If you swipe the reader and **reader works but door does not open**, ensure the reader is wired to the correct relay at the board. If it is, make sure power is being sent to door locking devices.