SZIE:55X70mm

正面

背面

Know about the contact sensor

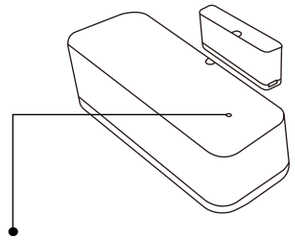

LED

Blinking: The device enters network configuration mode

OFF: The device is under standby status

(1)

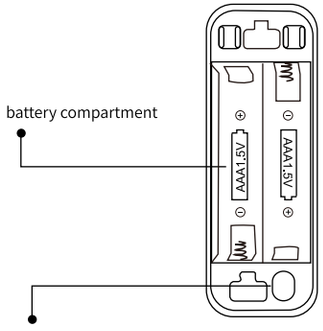

Button

Press and hold the button for 5 seconds until the LED blinks, the device will enter configuration mode

(2)

Quick Installation Guide

Note: the smart gateway must be added first before adding the sub-device.

1.Open the battery cover and insert the battery into the battery compartment(please note Battery positive and negative) .

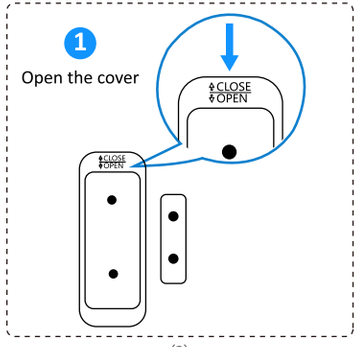

(3)

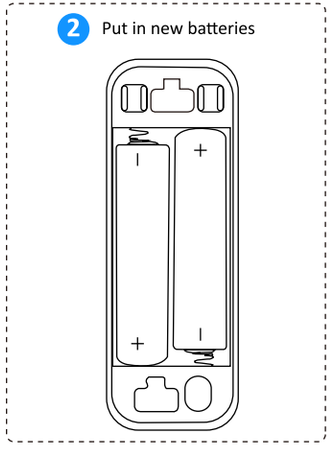

(4)

2.Open **"Smart Life"** app,Click **"search new device"** on the gateway homepage.

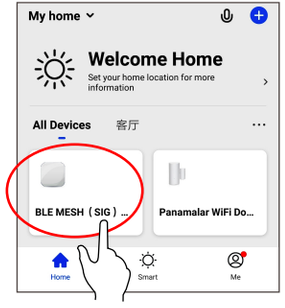

(5)

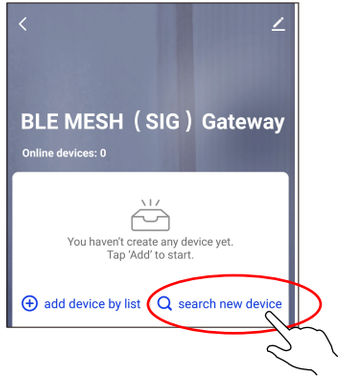

(6)

3.Press the reset button for 5 seconds, till the LED blink, then click **"Light is in a flash"** and follow the in-app instructions to connect the sensor to your gateway.

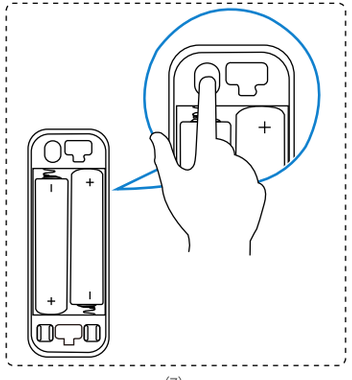

(7)

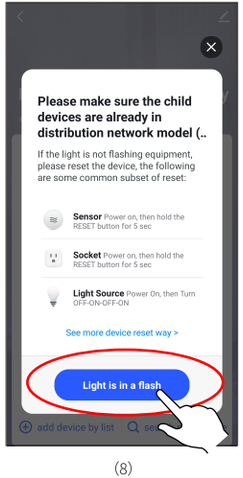

(8)

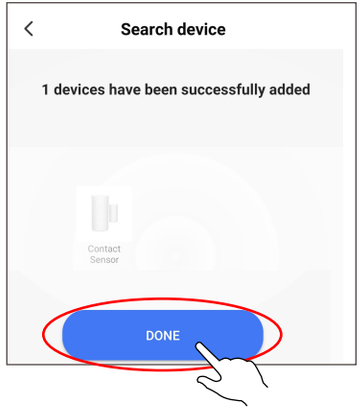

(9)

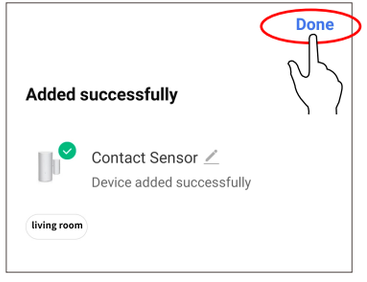

Waiting for a few seconds, This device is added successfully and you may rename it. Click **"Done"** to finish the setting.

(10)

4.Close the battery cover and put it where you need it . put it where you need it .

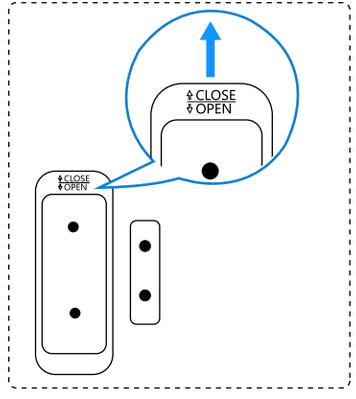

(11)

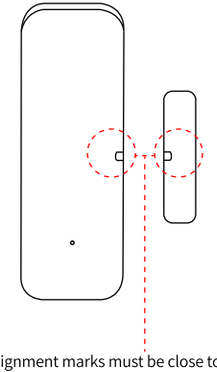

The alignment marks must be close together as possible.**Must be≤15mm**

(12)

FCC Statement

This equipment has been tested and found to comply with the limits for a Class B digital device, pursuant to part 15 of the FCC Rules. These limits are designed to provide reasonable protection against harmful interference in a residential installation. This equipment generates, uses and can radiate radio frequency energy and, if not installed and used in accordance with the instructions, may cause harmful interference to radio communications. However, there is no guarantee that interference will not occur in a particular installation. If this equipment does cause harmful interference to radio or television reception, which can be determined by turning the equipment off and on, the user is encouraged to try to correct the interference by one or more of the following measures:

- Reorient or relocate the receiving antenna.
- Increase the separation between the equipment and receiver.
- Connect the equipment into an outlet on a circuit different from that to which the receiver is connected.
- Consult the dealer or an experienced radio/TV technician for help.

Caution: Any changes or modifications to this device not explicitly approved by manufacturer could void your authority to operate this equipment.

This device complies with part 15 of the FCC Rules. Operation is subject to the following two conditions: (1) This device may not cause harmful interference, and (2) this device must accept any interference received, including interference that may cause undesired operation.

RF Exposure Information

The device has been evaluated to meet general RF exposure requirement. The device can be used in portable exposure condition without restriction.