GALILEO

DIGITAL DIFFUSION

Quick Start Guide

US and foreign Patent(s) Pending

Thank you, and congratulations!

YOU JUST MADE THE BEST INVESTMENT INTO YOUR CAREER

Your new Galileo is the most popular light kit in the world for content creation professionals. Read through these easy instructions so you can get setup to take your first high-quality video or photo with your phone.

THANK YOU

We cannot thank you enough for choosing GLAMCOR to be part of your profession. We work really hard to constantly improve our products, and you can always expect something new from us. It is our commitment to you, and we are honored to be part of your professional career.

STAY IN TOUCH

Share your success with us! You can reach us here:

Email: realperson@glamcor.com
Website: www.glamcor.com
Instagram: @glamcorofficial
Facebook: www.facebook.com/GLAMCOR

NEED SERVICE OR SUPPORT? GREAT!

We have legendary service supported by a team that operates almost around the clock. No matter where you are, send us an email so we can log your support issue in our system. Include your phone number so we can text or call you if you would like!

Email: realperson@glamcor.com

Identifying the kit components

24V 2A Power Supply
Included (not shown)

Remote Control

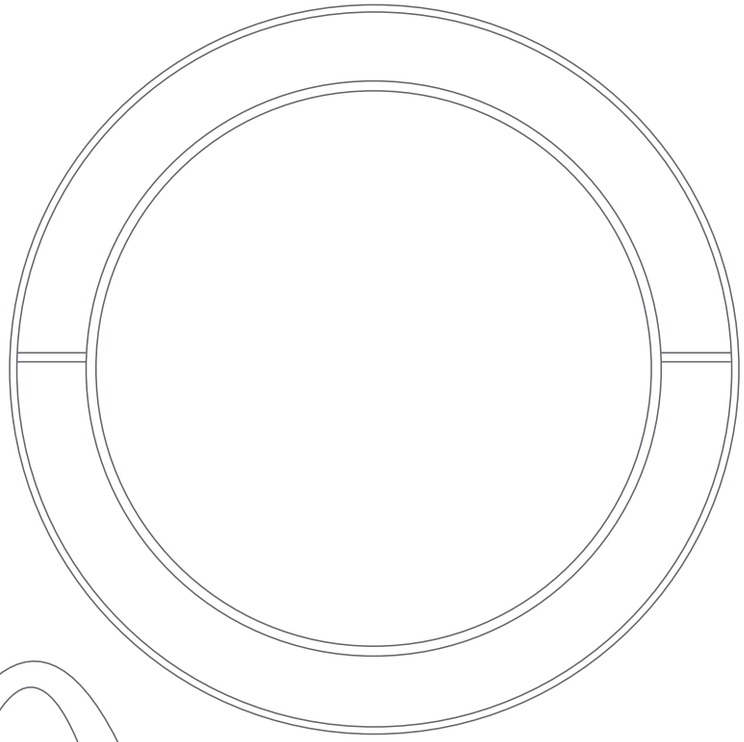

GALILEO
Ring Light

Flexible
Neck

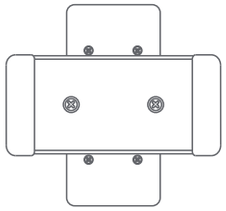

Phone Clip

Accessory
Mounting
Arm

Carry Bag

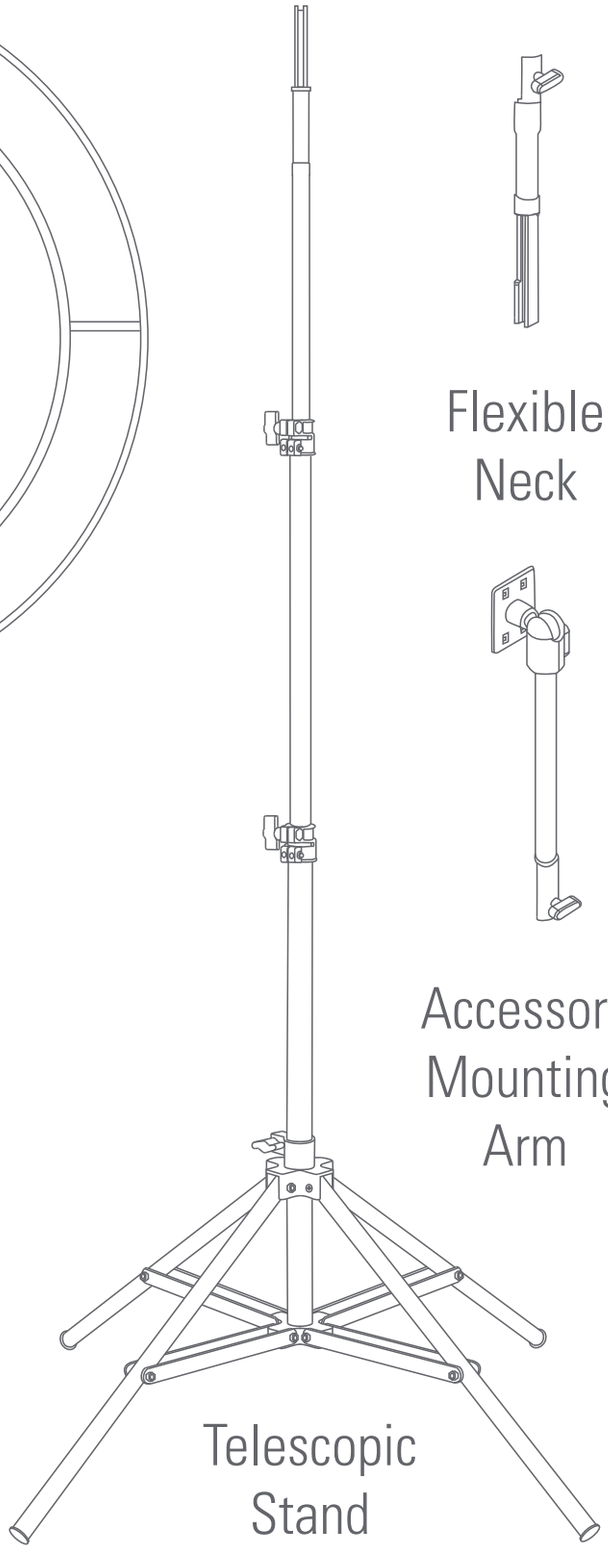

Telescopic
Stand

01 Preparing your stand for use (part 1)

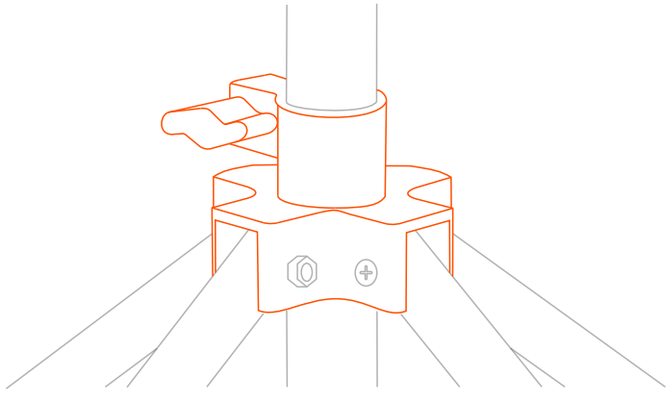

A Unscrew knob to loosen the adjustable leg stand slider

B Adjust leg stand slider down the pole until the stand legs are at the widest distance*

C Tighten knob to secure the adjustable leg stand slider

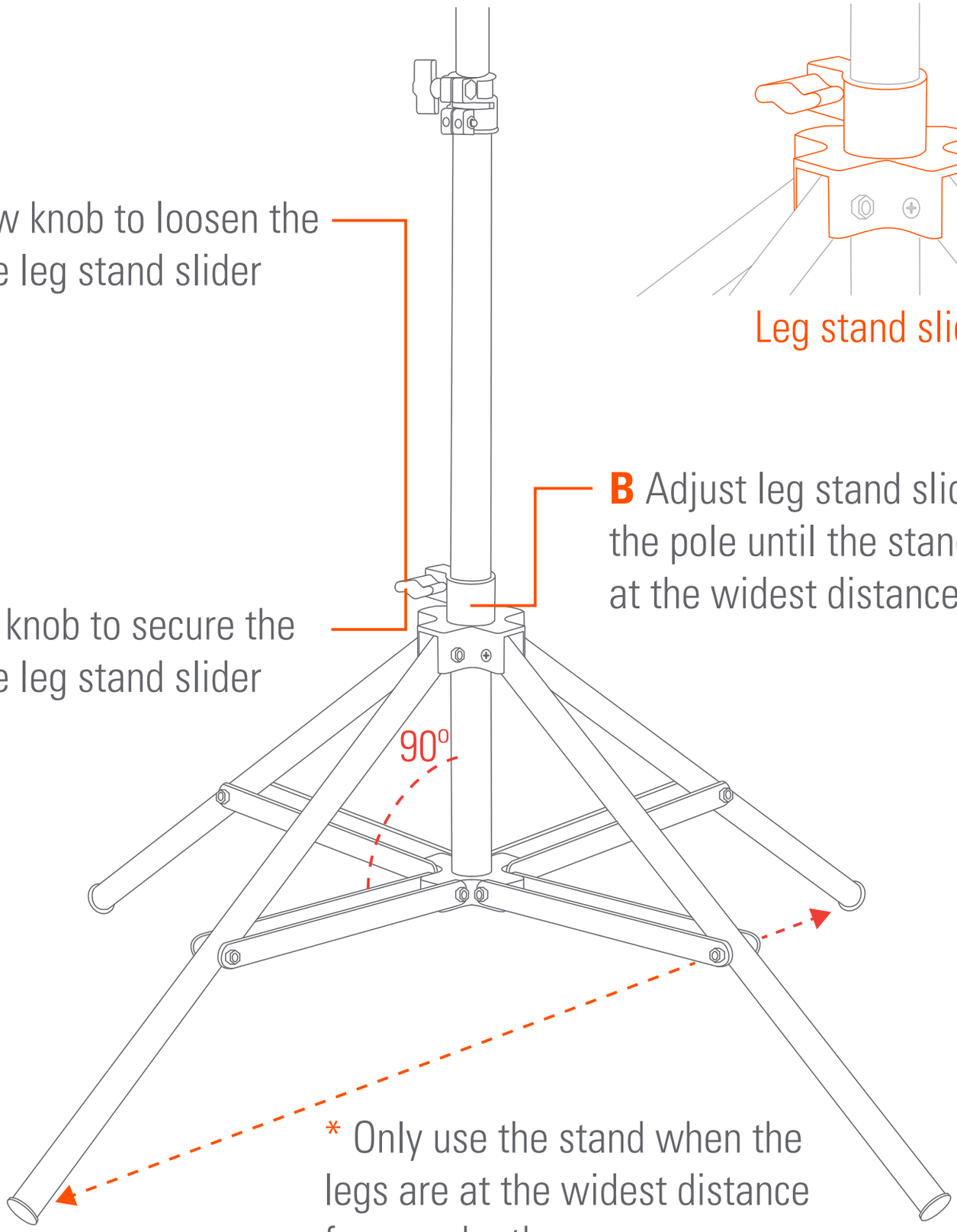

* Only use the stand when the legs are at the widest distance from each other

02 Preparing your stand for use (part 2)

A Adjust height of telescopic poles to your desired position

B Tighten knobs to secure the position of the poles

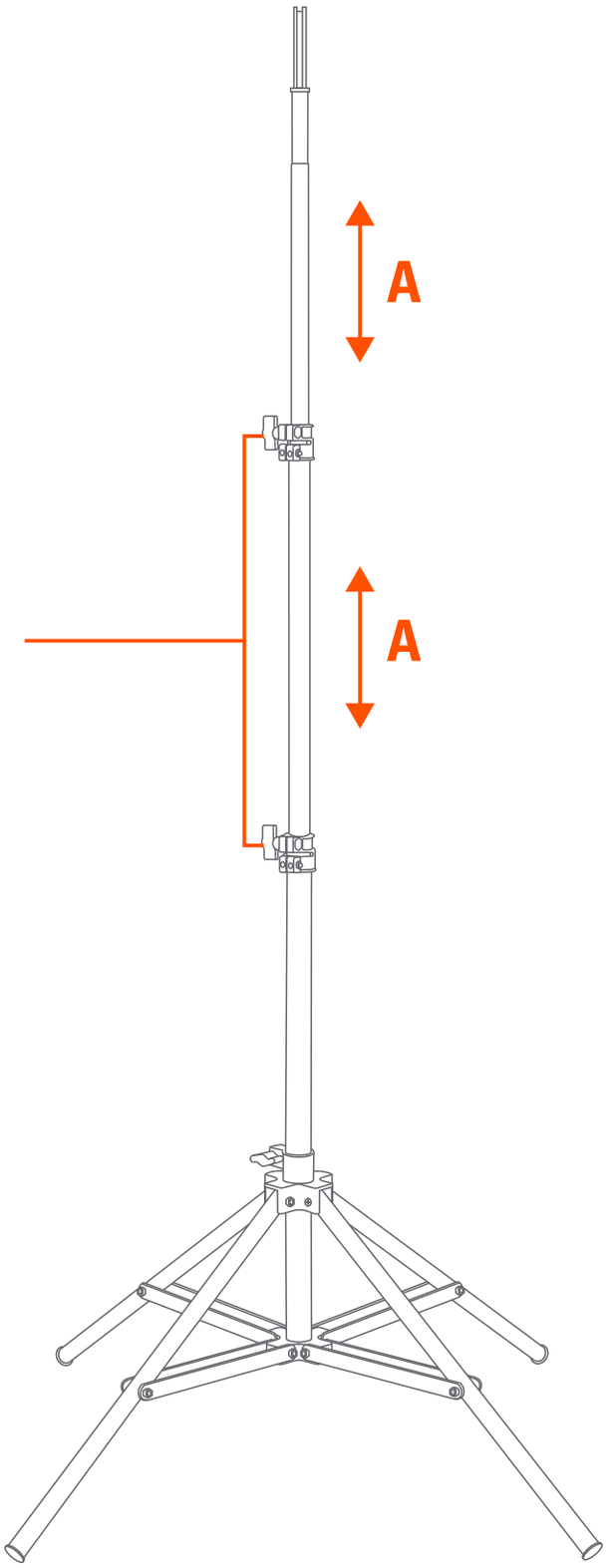

03 Preparing your stand for use (part 3)

A Adjust height of top pole above the knob by a minimum of 3in / 7.5cm

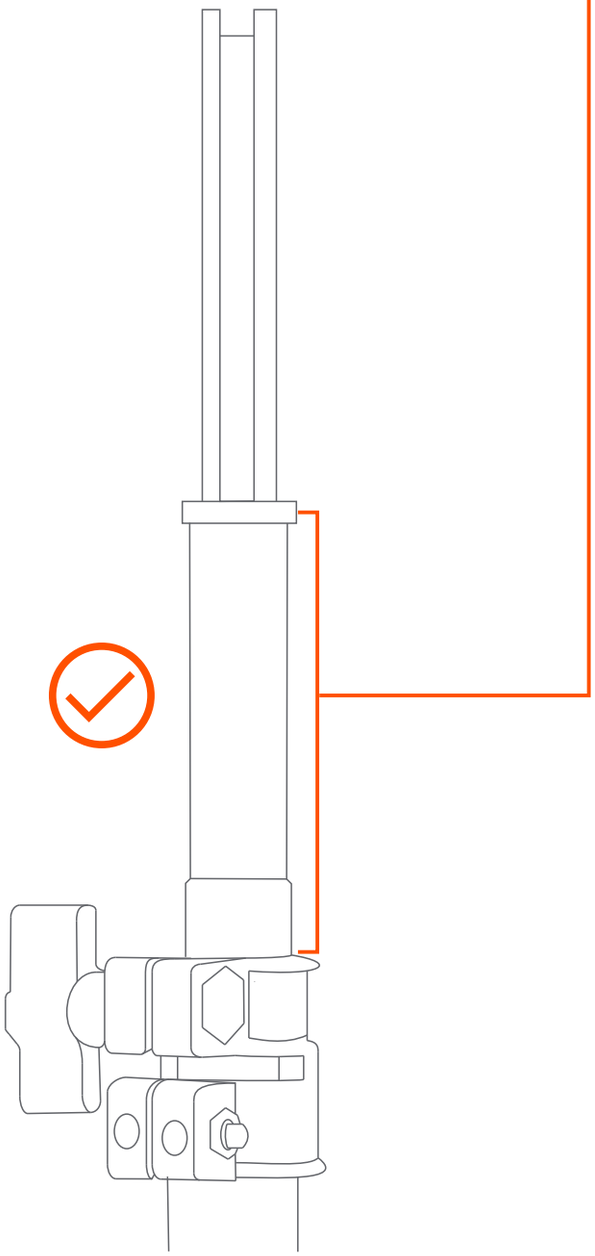

! Failing to follow this instruction can lead to damaging your light

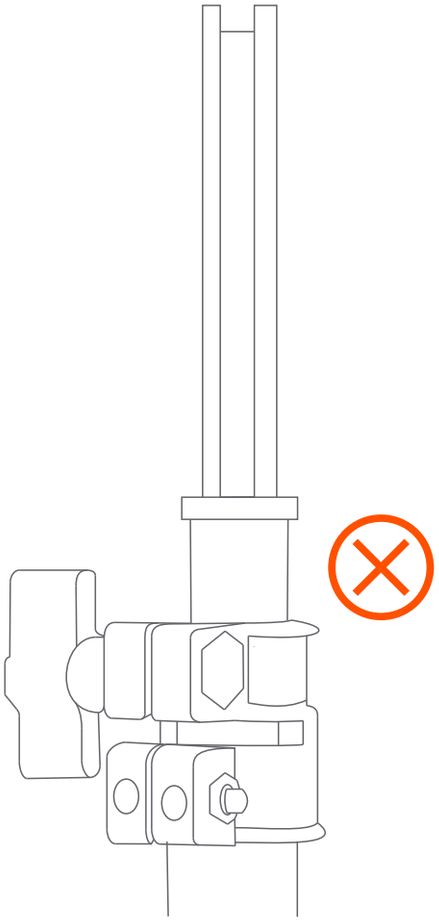

04 Mounting your ring light luminary - OPTION A

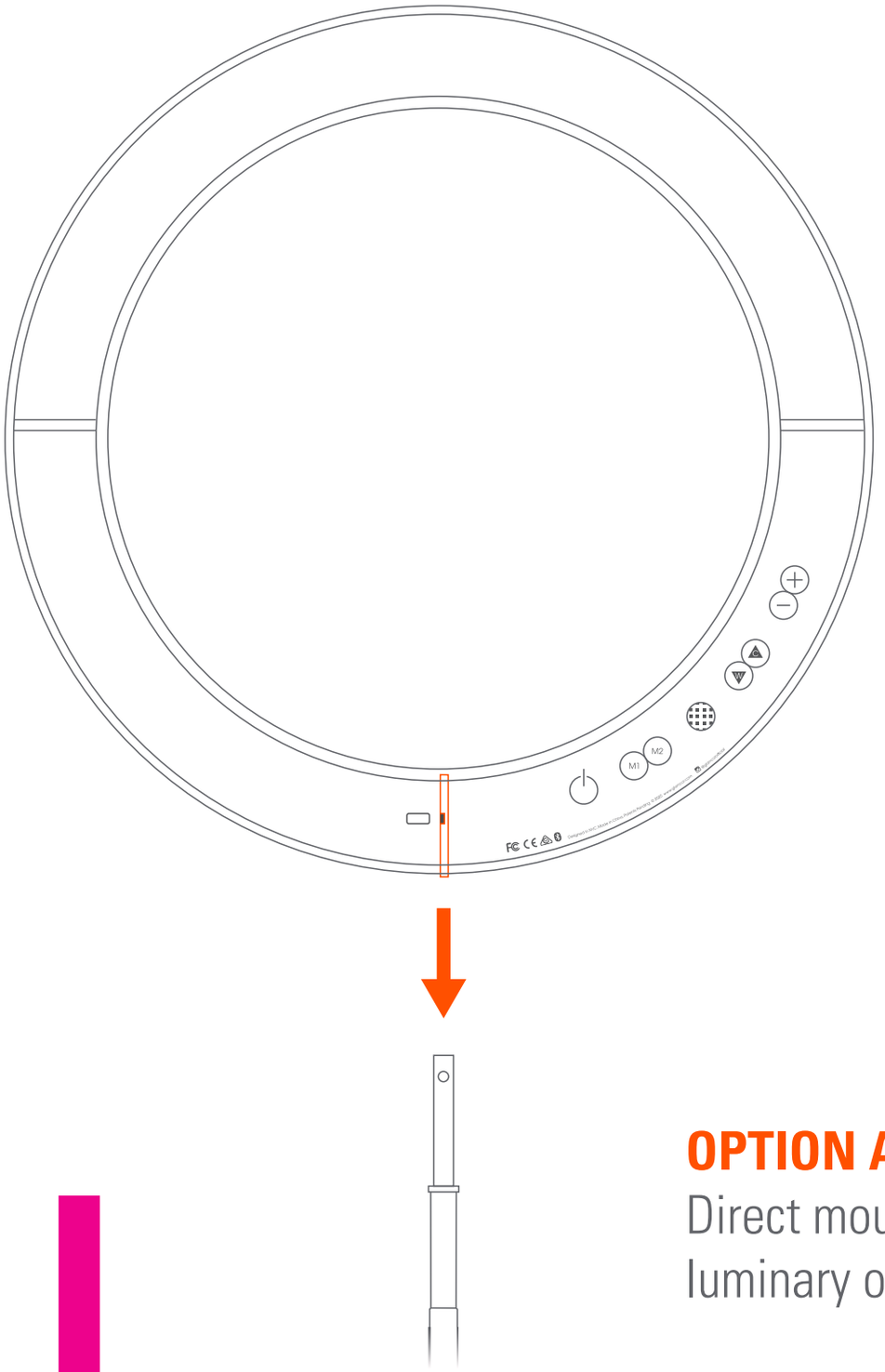

OPTION A

Direct mounting of the luminary onto the stand

05 Attaching your Accessory Mounting Arm

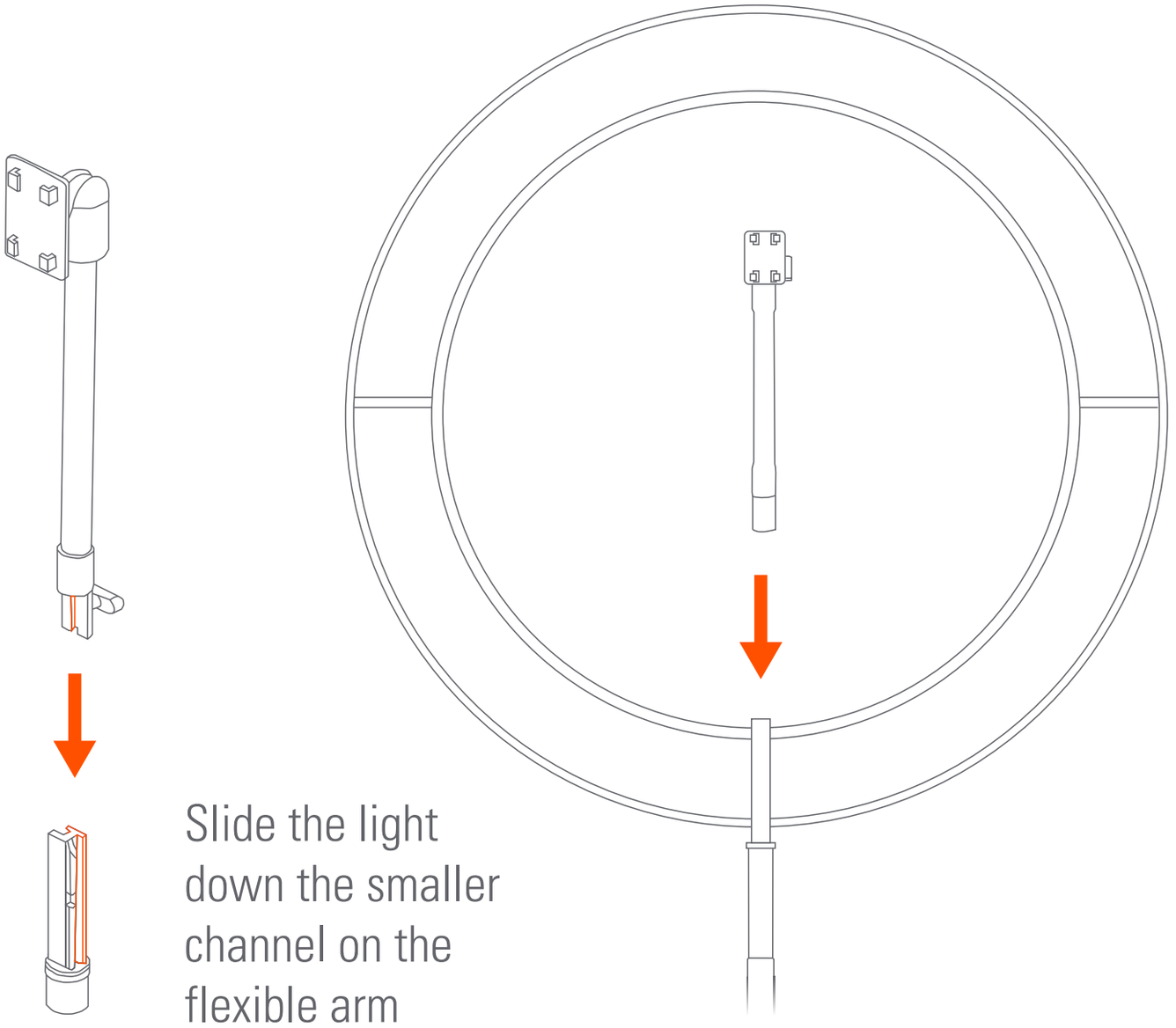

Slide the light down the smaller channel on the flexible arm

06 Secure Mounting Arm by tightening knob

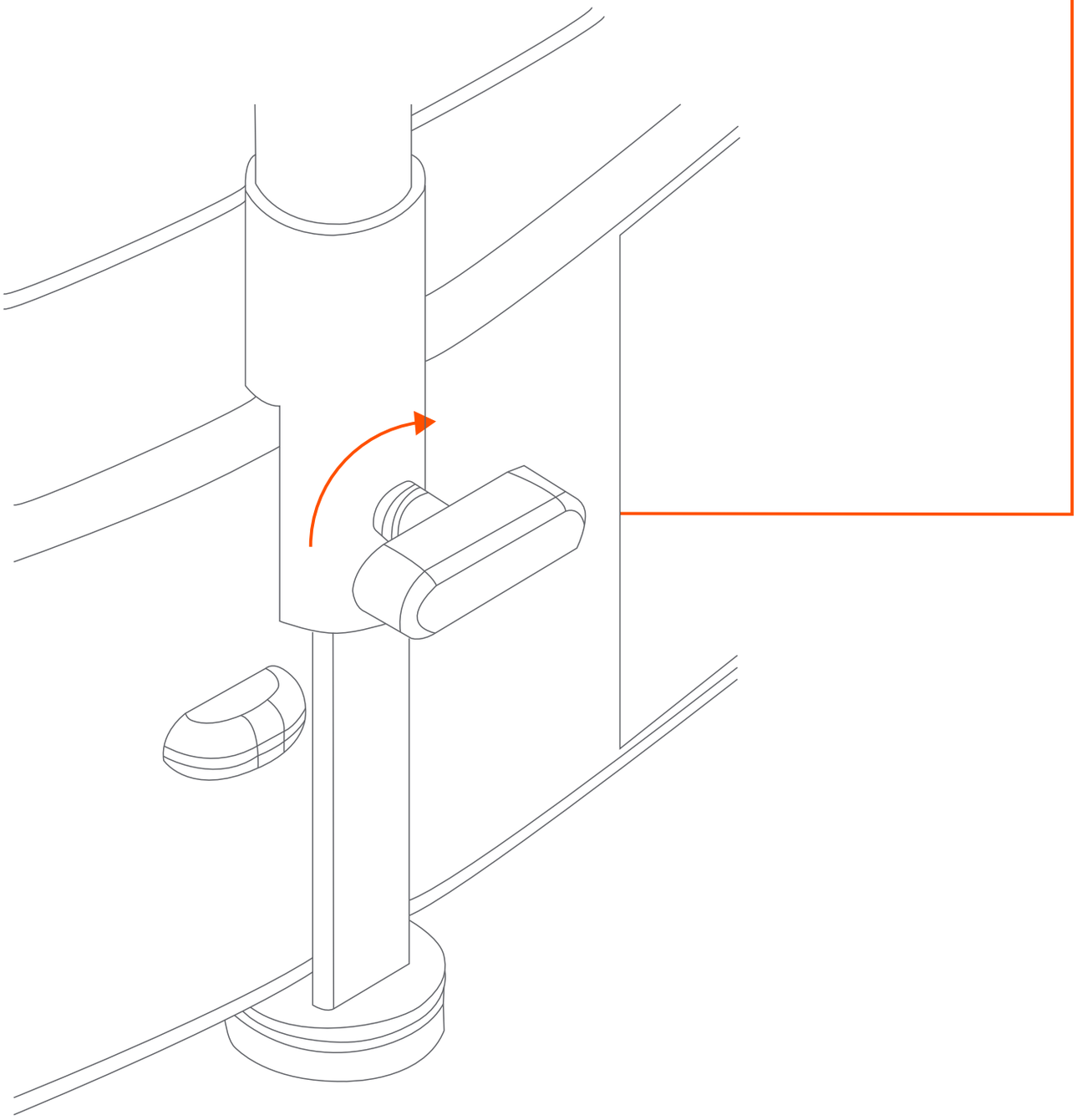

07 Fold upwards to turn on light

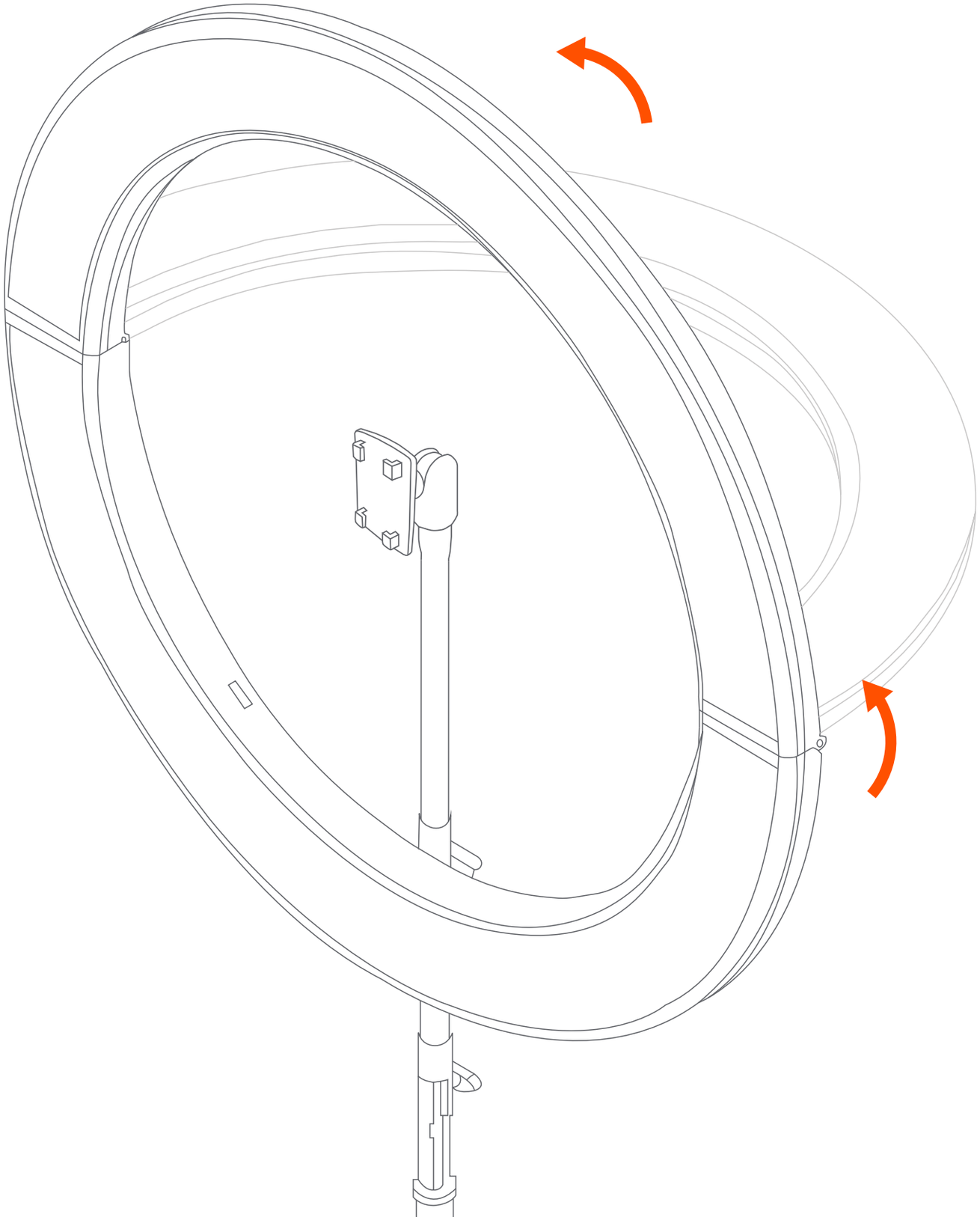

08 Power and function controls without the remote

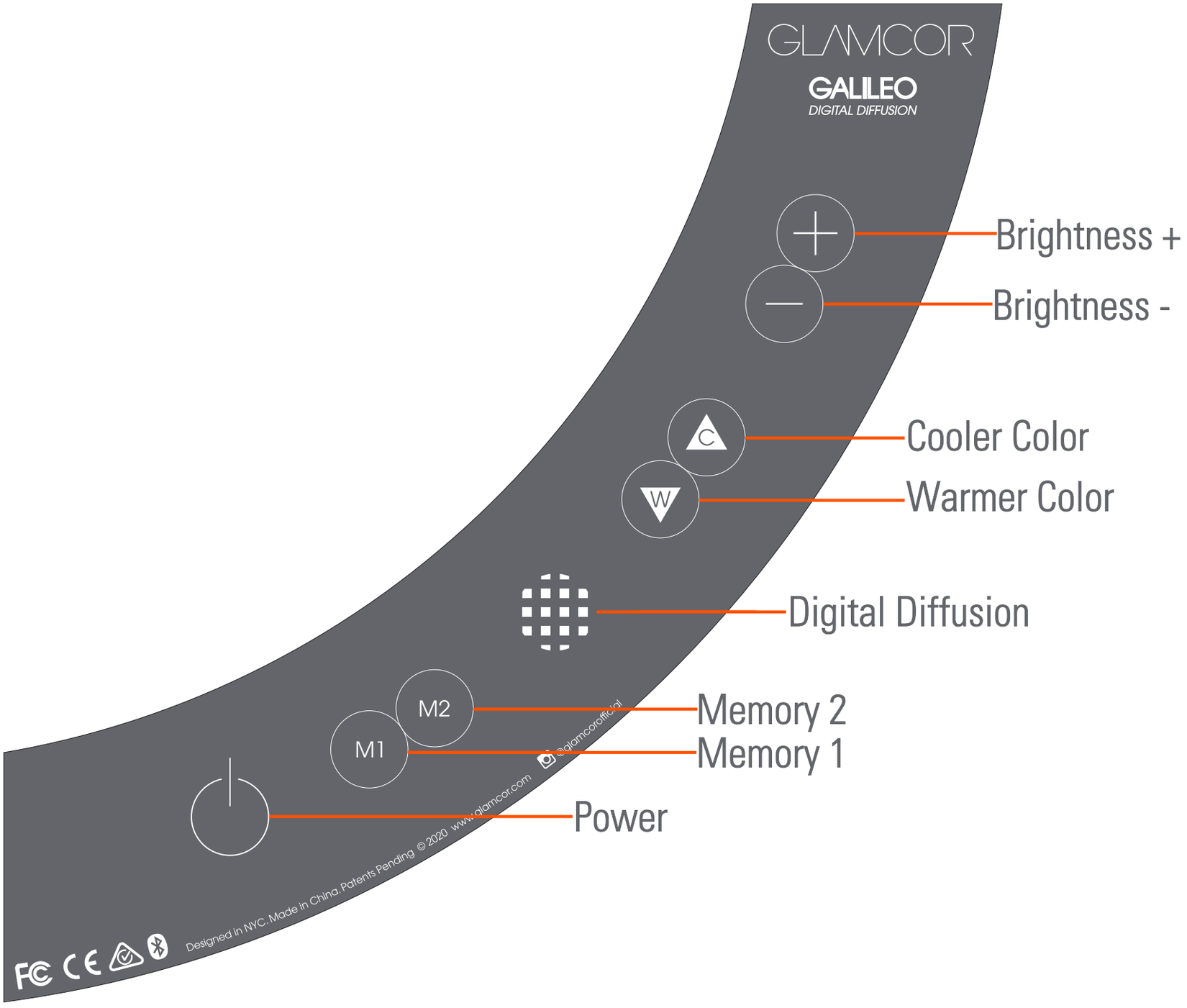

09 Using the fast-charging USB port

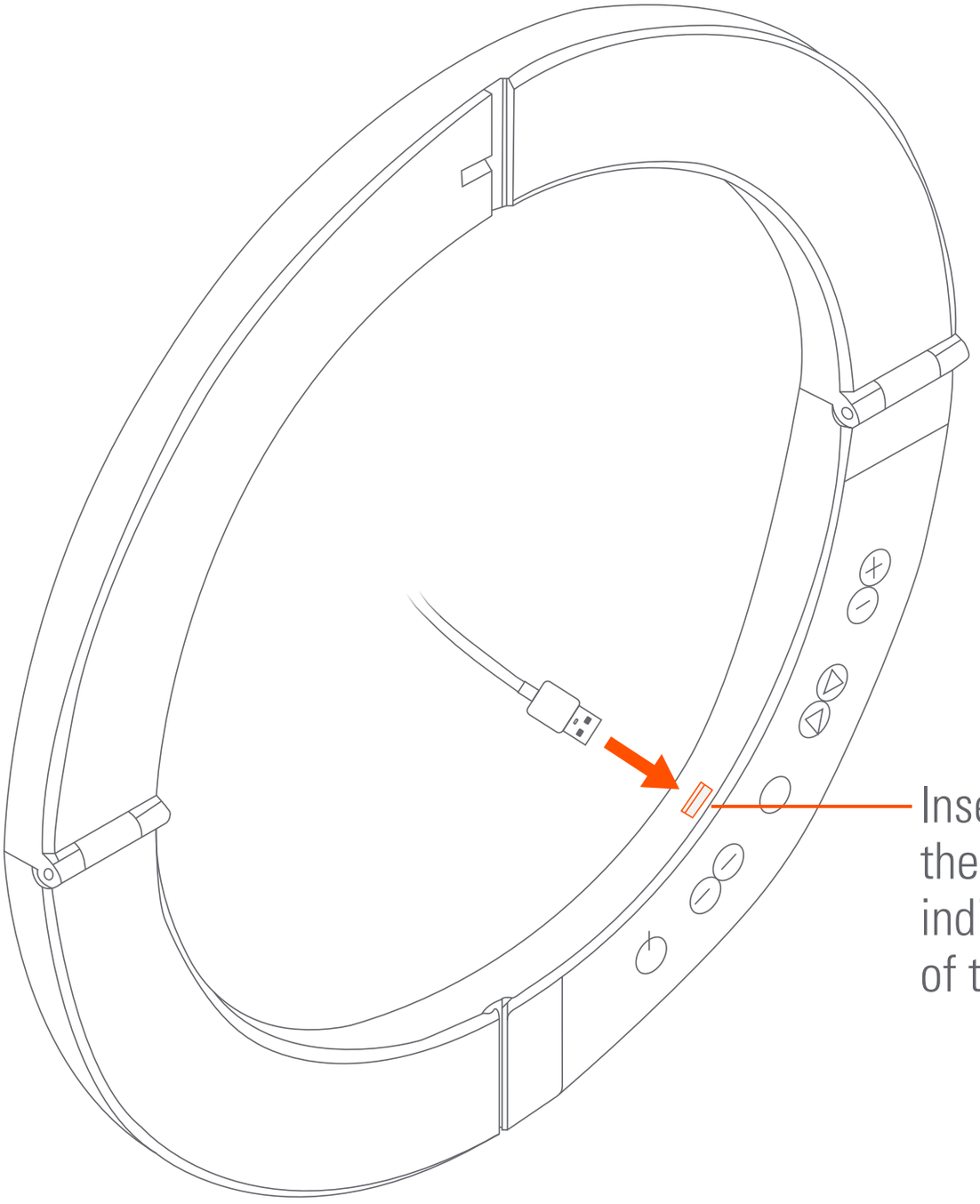

Insert charging plug into the top of the light as indicated by the location of the arrow.

10 Digital Diffusion lens frosting

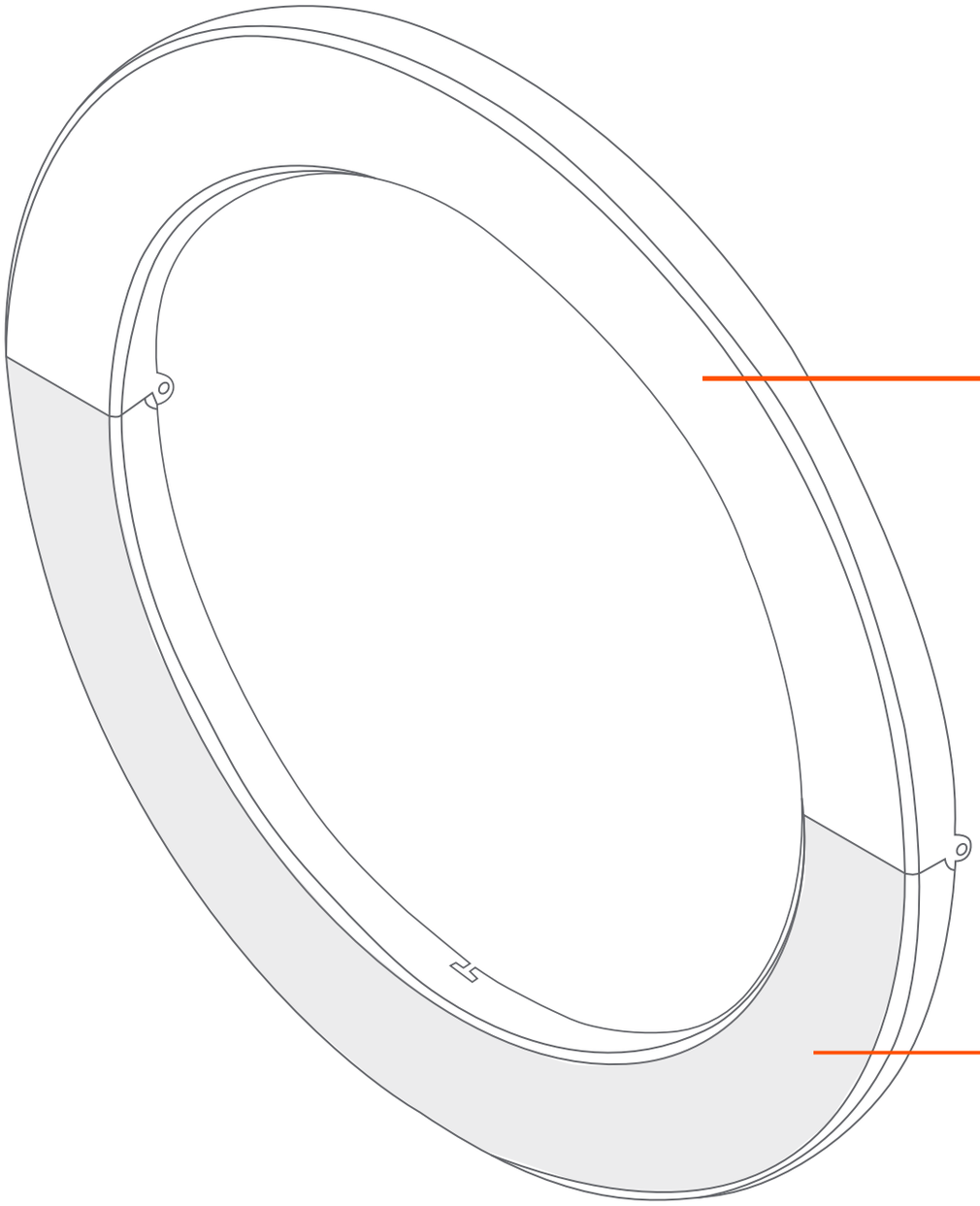

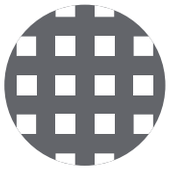

This pattern indicates Digital Diffusion. Press this button to frost the LED lens.

11 Charging

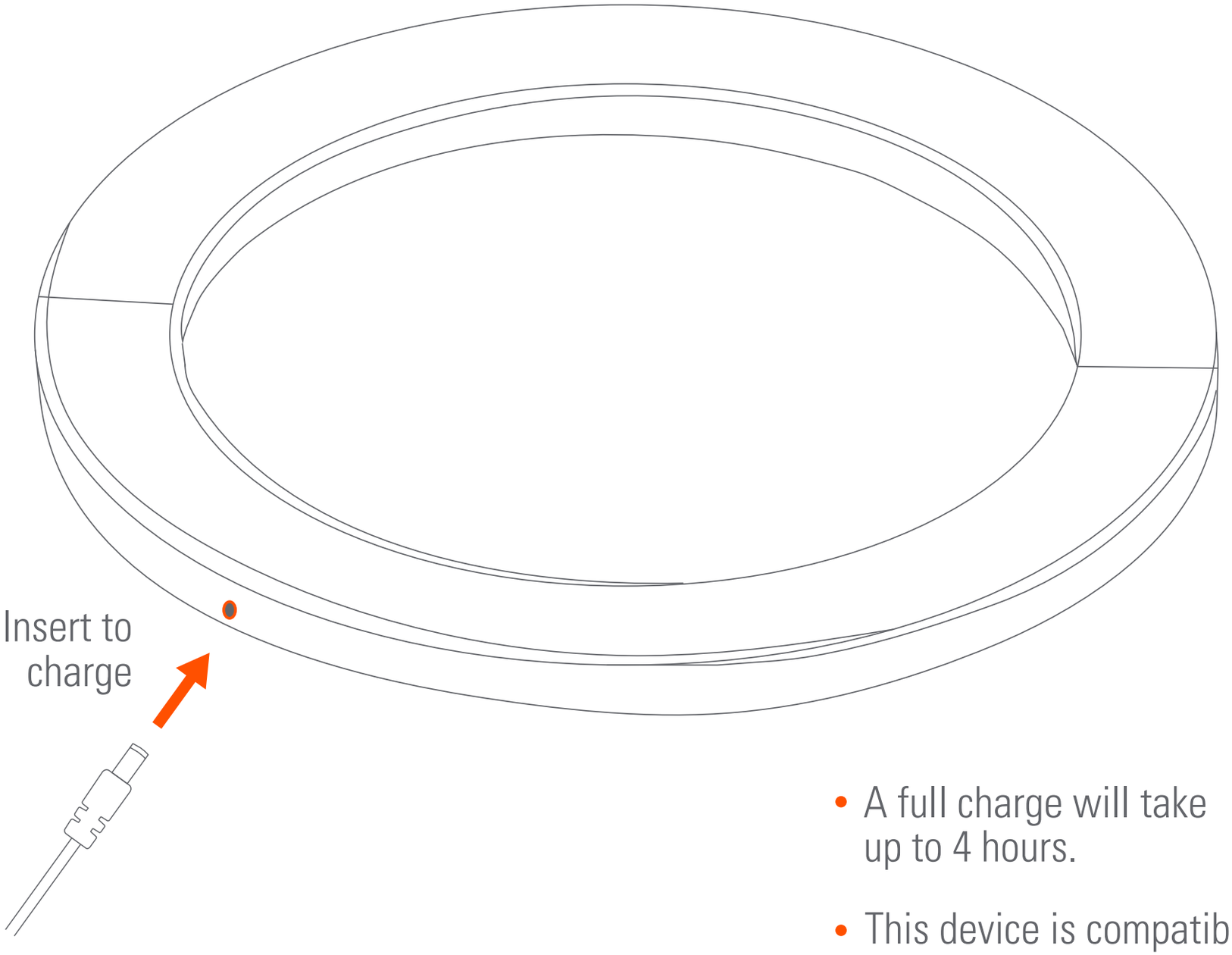

- A full charge will take up to 4 hours.
- This device is compatible with global voltages of 100-240VAC. 50/60 Hz.

12 Charging your phone or other device

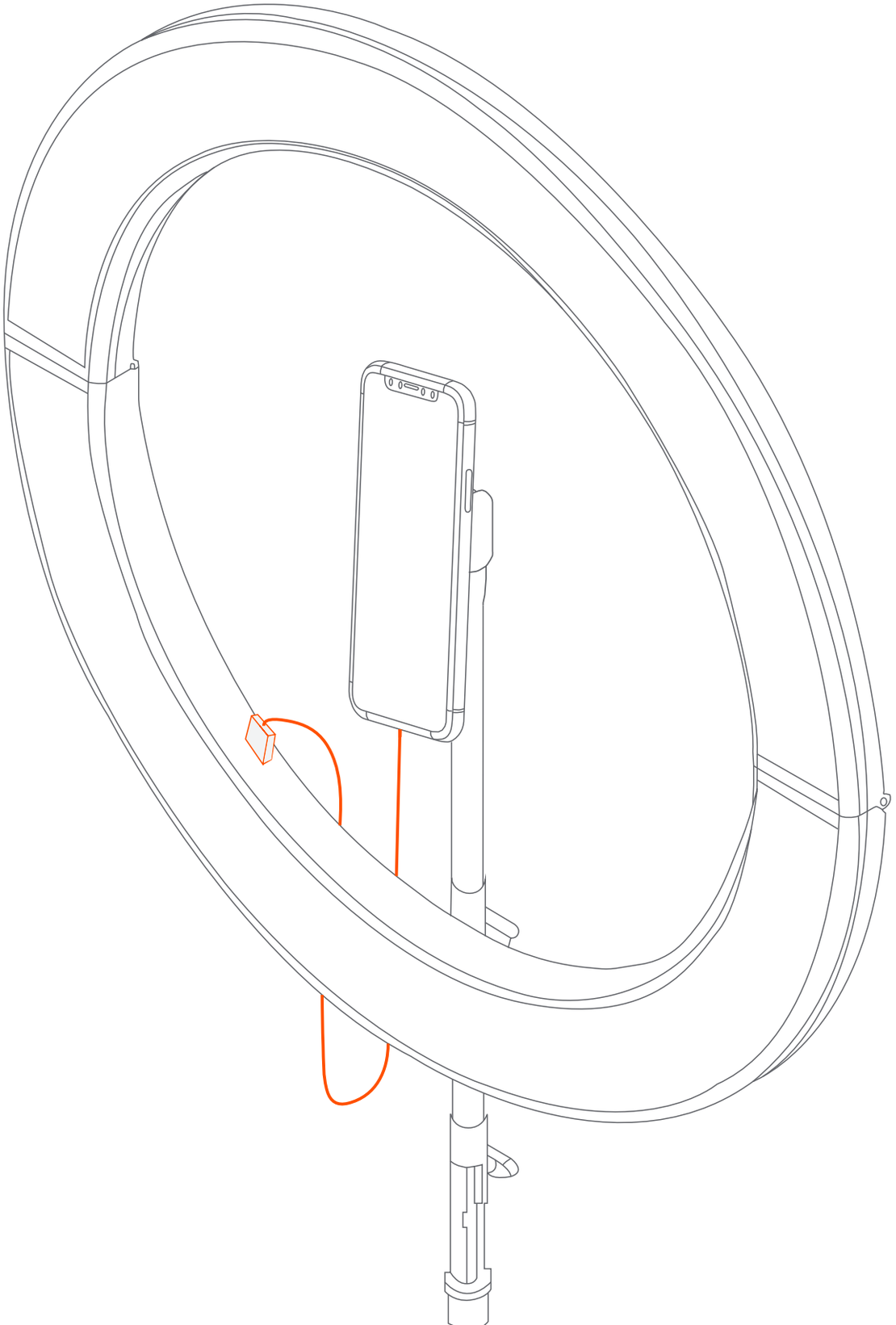

Learn the functions of the Remote Control

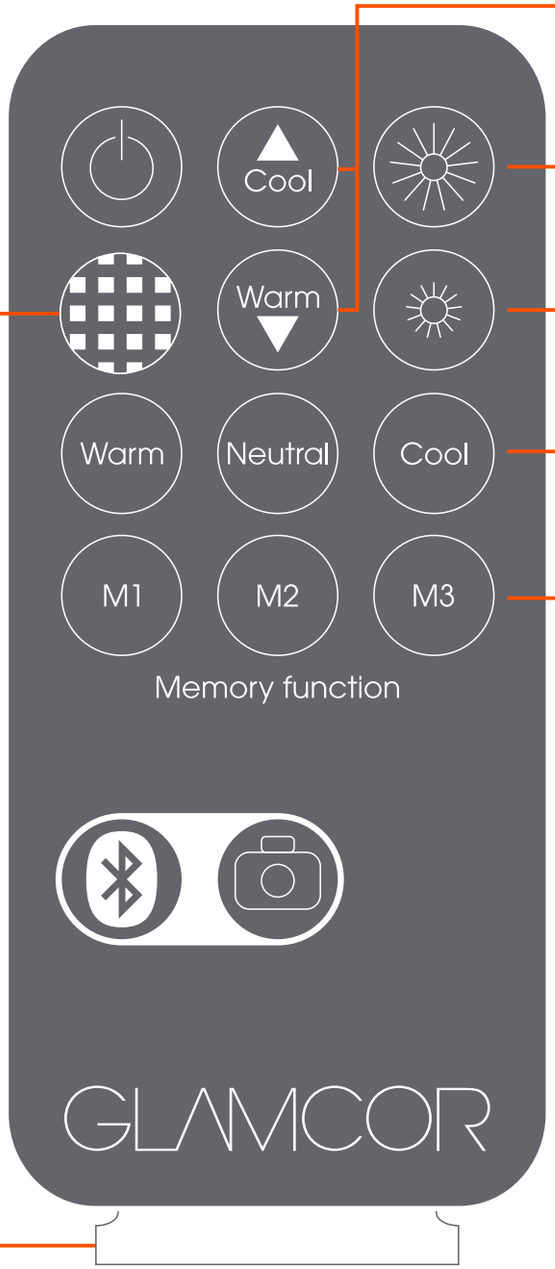

Color temperature adjustments

Brightness +

Digital Diffusion

Brightness –

Color temperature presets[1]

Memory presets:

A Set your color and brightness combination

B Press and hold an M button for five seconds

C Recall your saved settings by pressing the programmed M button

D Overwrite any saved setting by following steps A, B, and C

Pull to remove plastic battery protector prior to first use

The preset brightness is 50%

Remote Bluetooth camera operation

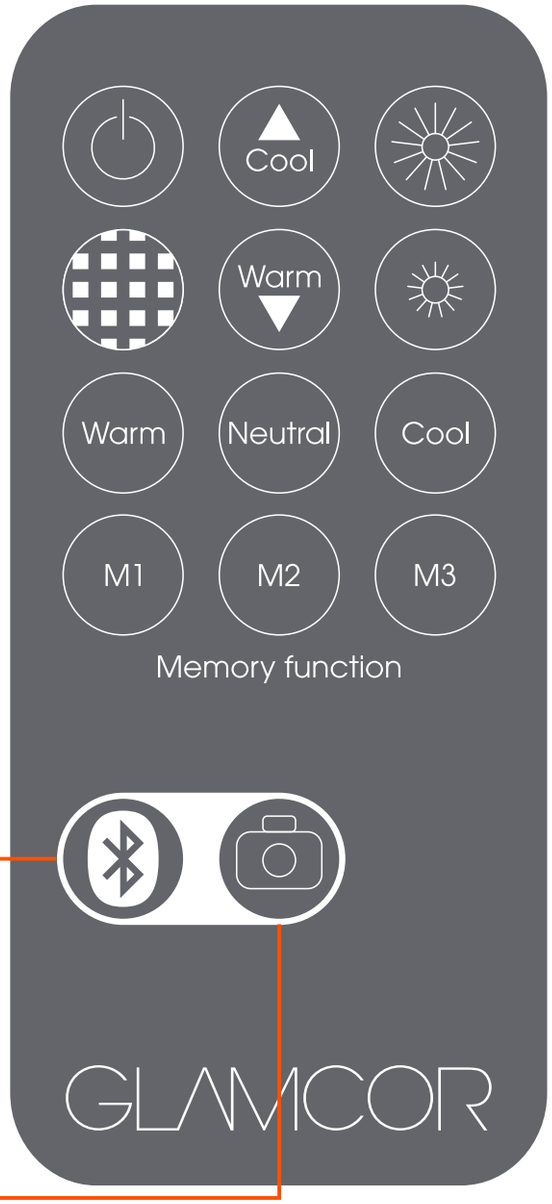

A Press and hold the Bluetooth button for five seconds

B On your phone in your Bluetooth settings, pair phone to "GLAMCOR"

C Open your camera app[2]

D Press the camera button to start/stop your video or to take a photo

[2] On Android phones, enable the volume button to take pictures

15 Taking off the light from the stand

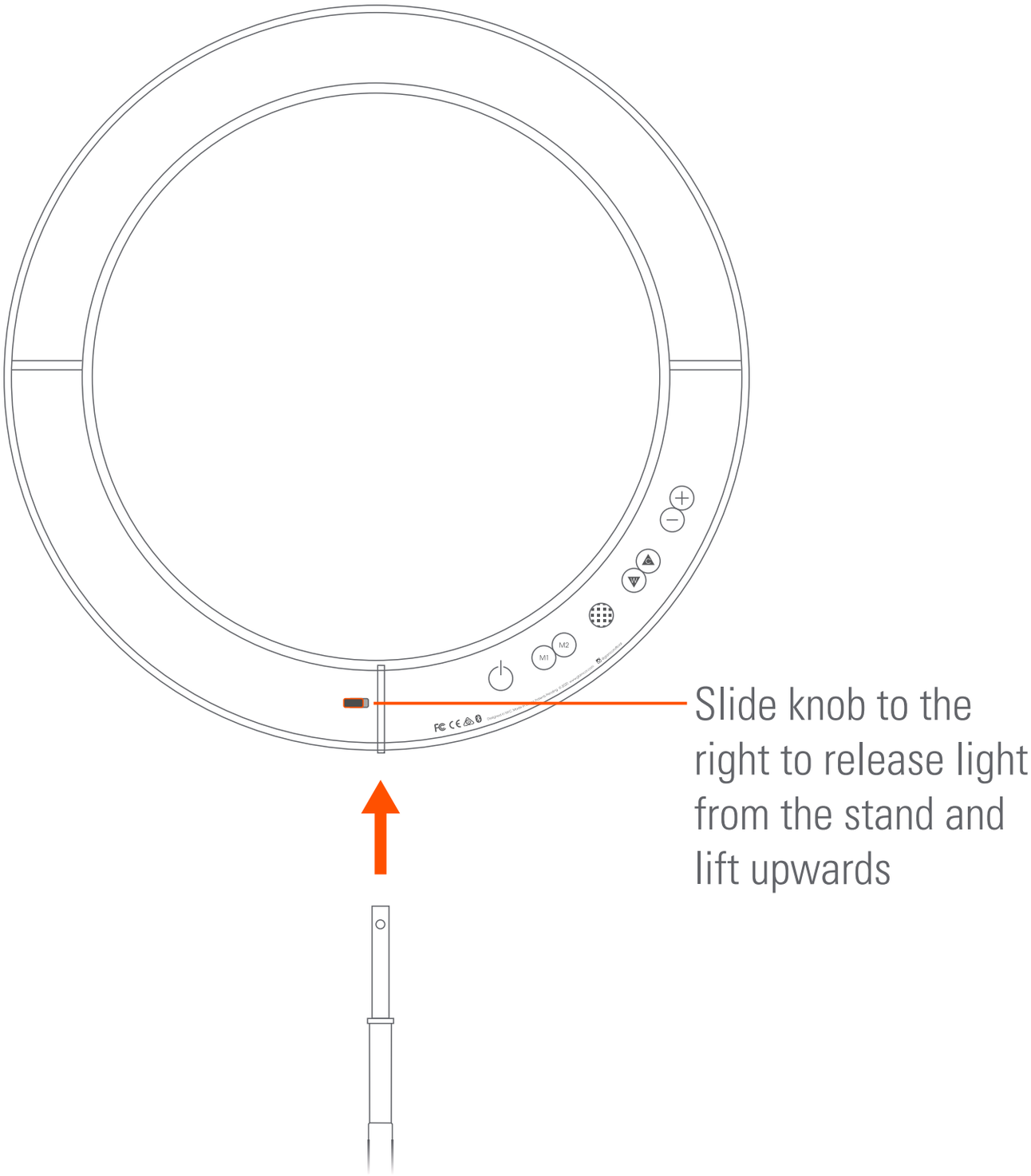

Safety Instructions

PROPER USE

This lamp is designed for illumination in dry indoor rooms. It is not suitable for use in damp rooms, e.g. bathrooms. The lamp must never be used for direct irradiation of persons, animals, or plants. Only use this product as described in this manual.

DO NOT SUBSTITUTE A POWER SUPPLY OTHER THAN THE INCLUDED APPROVED GLAMCOR BRANDED POWER SUPPLY OR GENUINE REPLACEMENT.

RISK OF INJURY FOR CHILDREN, PERSON, AND ANIMALS

- Keep children away from packaging - risk of suffocation!
- Keep unsupervised children away from the lamp.
- Do not look directly into the light source! Your eyes could be damaged.
- The lamp is not suitable for irradiation of persons.
- Keep animals away from the lamp! The lamp is not to be used for irradiation of animals, such as poultry, lambs etc. Risk of burning.

LOCATION

- Place the lamp at least 8” or 20 cm from flammable materials.
- Always place the lamp on an even and stable surface to prevent tipping over.
- Do not subject the device to extreme temperatures, severe changes in temperatures, direct sunlight, or moisture.
- Do not allow the device to fall, and do not subject it to strong impacts.
- Keep the lamp well away from heat sources such as stovetops or ovens.
- Ensure that the device is not able to fall in water and cannot get wet.

Safety Instructions (con't)

ELECTRICITY - RISK OF ELECTRIC SHOCK

- Keep the lamp away from humidity.
- Connect the lamp only to outlets corresponding with the technical data of the lamp.
- Check the lamp before each use for damage.The lamp is not to be used when it shows visible damage.
- Do not take the lamp apart and only have it repaired at your local electrical store.
- Before cleaning or if the lamp is not to be used for a long period, unplug the lamp from the main power supply.
- During storms; unplug the lamp from the main power supply. When removing the plug from the socket, always pull on the plug and not the cable.
- A damaged cable must only be repaired at your local electrical store.
- Do not use the lamp if it is damaged or if the connecting cable shows any kind of visible damage.

DAMAGES ON DEVICE AND MATERIALS

- Do not cover lamp, for example with drapes or anything else. This could lead to fire.

CHANGING BULBS

- LED lights last for 20,000 hours. Do not attempt to change bulbs.

CARE / MAINTENANCE

- Keep the lamp away from humidity.
- Unplug the lamp from the mains power supply.
- Dust off the lamp if necessary with a dry cloth.

Warranty / Guarantee

IMPORTANT

Thank you for purchasing this product. It has been made to demanding high-quality standards and is guaranteed for domestic use against manufacturing faults for a period of 12 months from the date of purchase.

This guarantee does not affect your statutory rights. If your product fails due to a defect in material or workmanship during this period, please contact GLAMCOR by email (realperson@glamcor.com) or return it to the place of purchase.

Normal wear and tear is not covered under the guarantee. Any guarantee is invalid if the product has been misused or subject to neglect or an attempted repair other than by our own service center.

Due to continuous product improvement, we reserve the right to change the product specification without prior notice.

After Sales Customer Service Department:
GLAMCOR
110 Wall Street Floor 5
New York, NY 10005
EMAIL: realperson@glamcor.com

Please retain for future reference. Colors and contents may vary.

Recycling

DISPOSAL

The packaging material is recyclable. Dispose of the packaging in an environmentally friendly manner, and make it available for the recyclable material collection service.

Dispose of the product in an environmentally friendly manner when you decide to part with it. This device should not be disposed of with household waste. Dispose of it at a recycling center for old electrical and electronic appliances.

Please recycle where facilities exist.

Check with your Local Authority or retailer for recycling advice.

Product Contents

SPECIFICATIONS

- Unit: GLAMCOR Galileo
- Voltage supply: Input 100-240AC, Output 5V 2A
- Bulb: LED
- Protection class: 1
- Weight: 4.5lbs/2kg

INCLUDED IN KIT

- GLAMCOR Galileo ring ligh
- Flexible Neck
- Accessory Mounting Arm
- Phone clip
- Telescopic stand
- Carry bag
- 5V 2A power supply
- Remote control
- Instruction booklet

FCC Notice - USA and Canada

⚠ WARNING: FOR INDOOR USE ONLY

This device complies with Part 15 of the FCC Rules. Operation is subject to the following two conditions: (1) this device may not cause harmful interference, and (2) this device must accept any interference received, including interference that may cause undesired operation.

WARNING: Changes or modifications to this unit not expressly approved by the party responsible for compliance could void the user's authority to operate the equipment.

NOTE: This equipment has been tested and found to comply with the limits for a Class B digital device, pursuant to Part 15 of the FCC Rules. These limits are designed to provide reasonable protection against harmful interference in a residential installation. This equipment generates, uses, and can radiate radio frequency energy and, if not installed and used in accordance with the instructions, may cause harmful interference to radio communications. However, there is no guarantee that interference will not occur in a particular installation. If this equipment does cause harmful interference to radio or television reception, which can be determined by turning the equipment off and on, the user is encouraged to try to correct the interference by one or more of the following measures:

– Reorient or relocate the receiving antenna.
– Increase the separation between the equipment and receiver.
– Connect the equipment into an outlet on a circuit different from that to which the receiver is connected.
– Consult the dealer or an experienced radio TV technician for help.

To maintain compliance with FCC's RF Exposure guidelines, This equipment should be installed and operated with minimum distance between 20cm the radiator your body: Use only the supplied antenna.
This Class B digital apparatus complies with Canadian ICES-003.
Cet appareil numérique de la classe B est conforme à la norme NMB-003 du Canada.
FCC Registration Number: GC819783

© 2020 GLAMCOR GLOBAL LLC. Reproduction in whole or in part without written permission is prohibited. All rights reserved. GLAMCOR is a trademark of GLAMCOR GLOBAL LLC.

12 Attaching the accessory

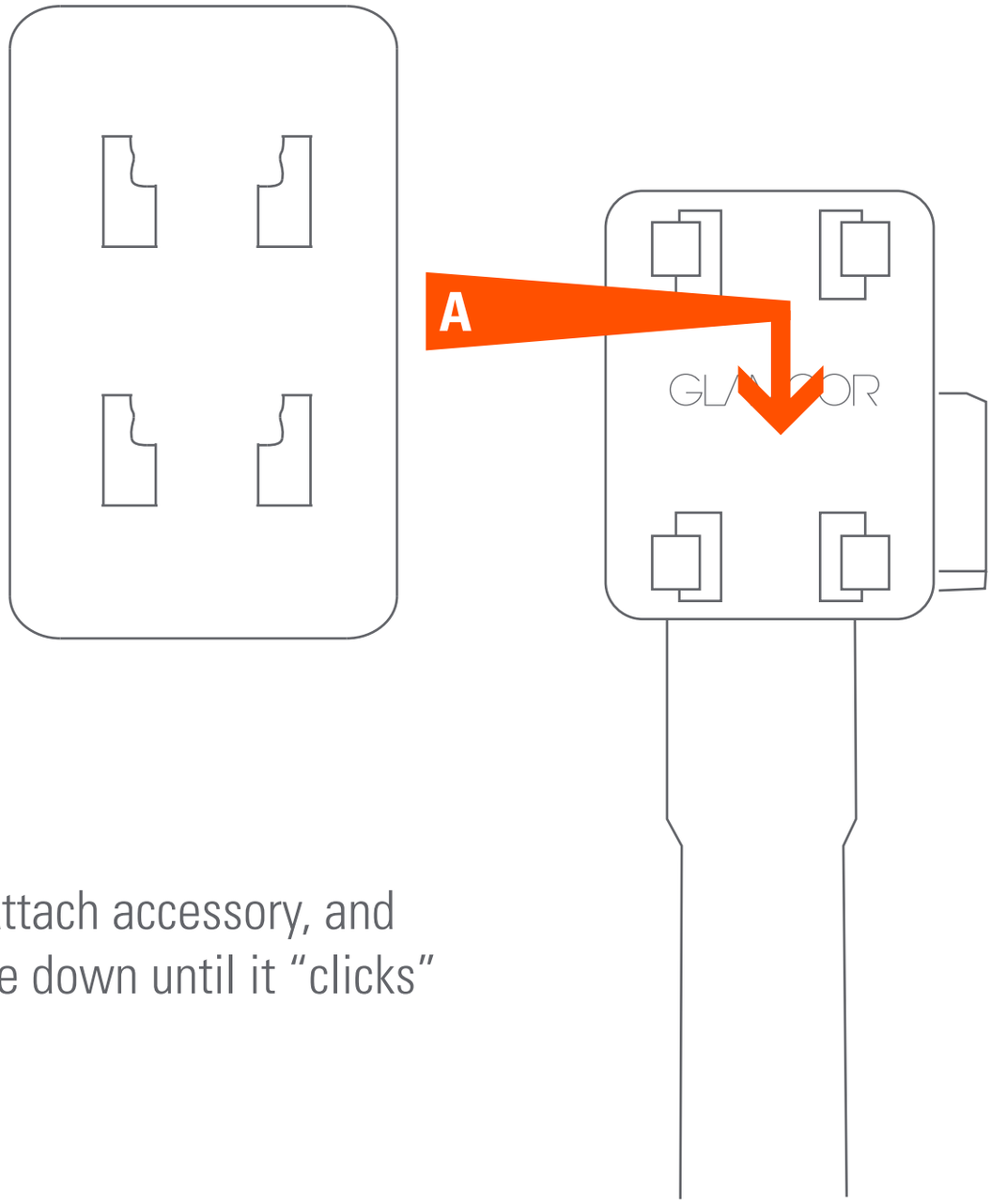

A Attach accessory, and slide down until it “clicks”

Packing your ring light into the carry bag

A Fold ring light as depicted in the illustration

B Place the folded light into the inside pocket in the carry bag

04 Powering on your light

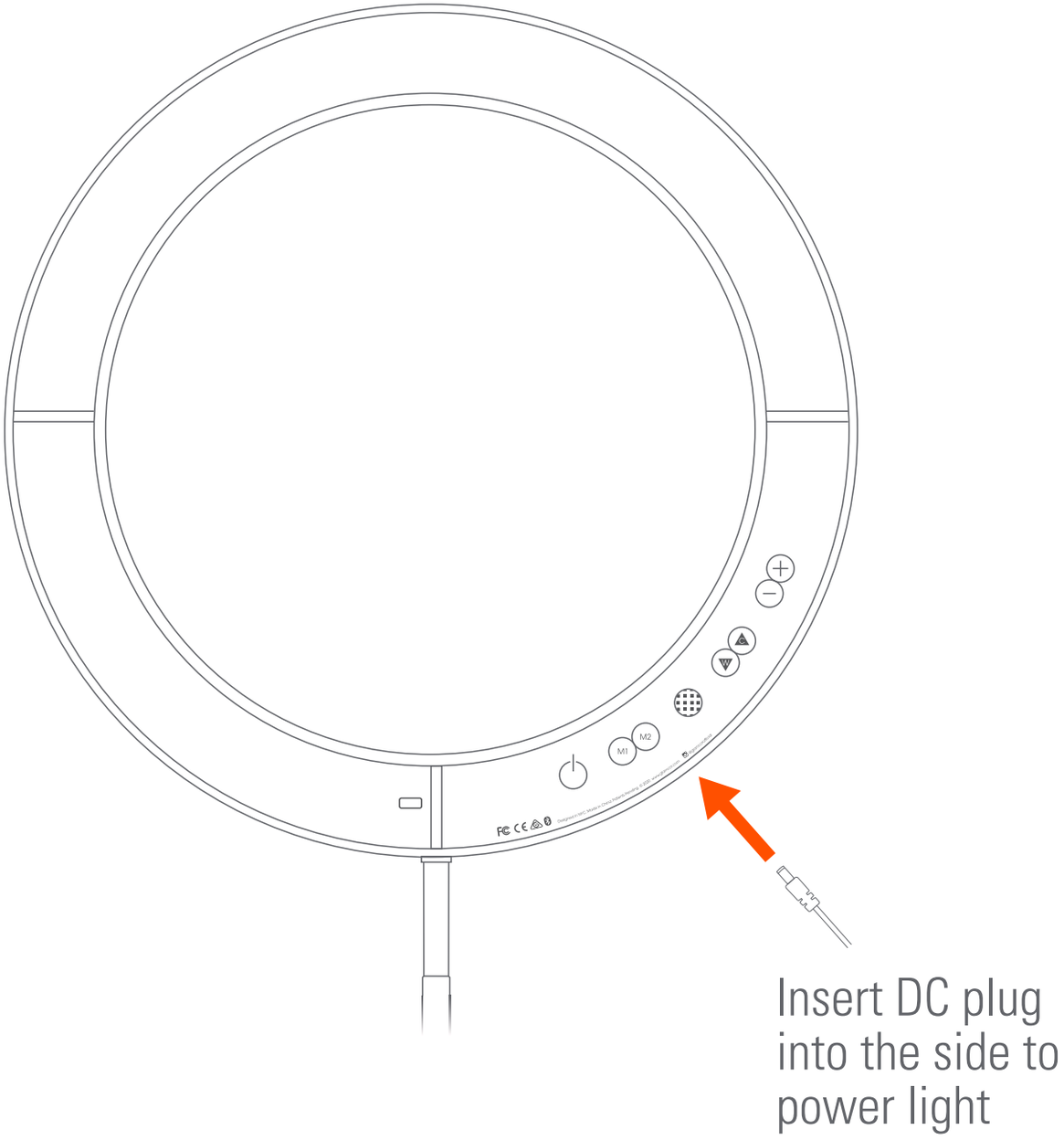

Remote Control sensor

Point the Remote Control directly at the sensor at a distance of approximately 6ft / 1.8m or less to control the light

04 Attaching your Flexible Neck - OPTION B

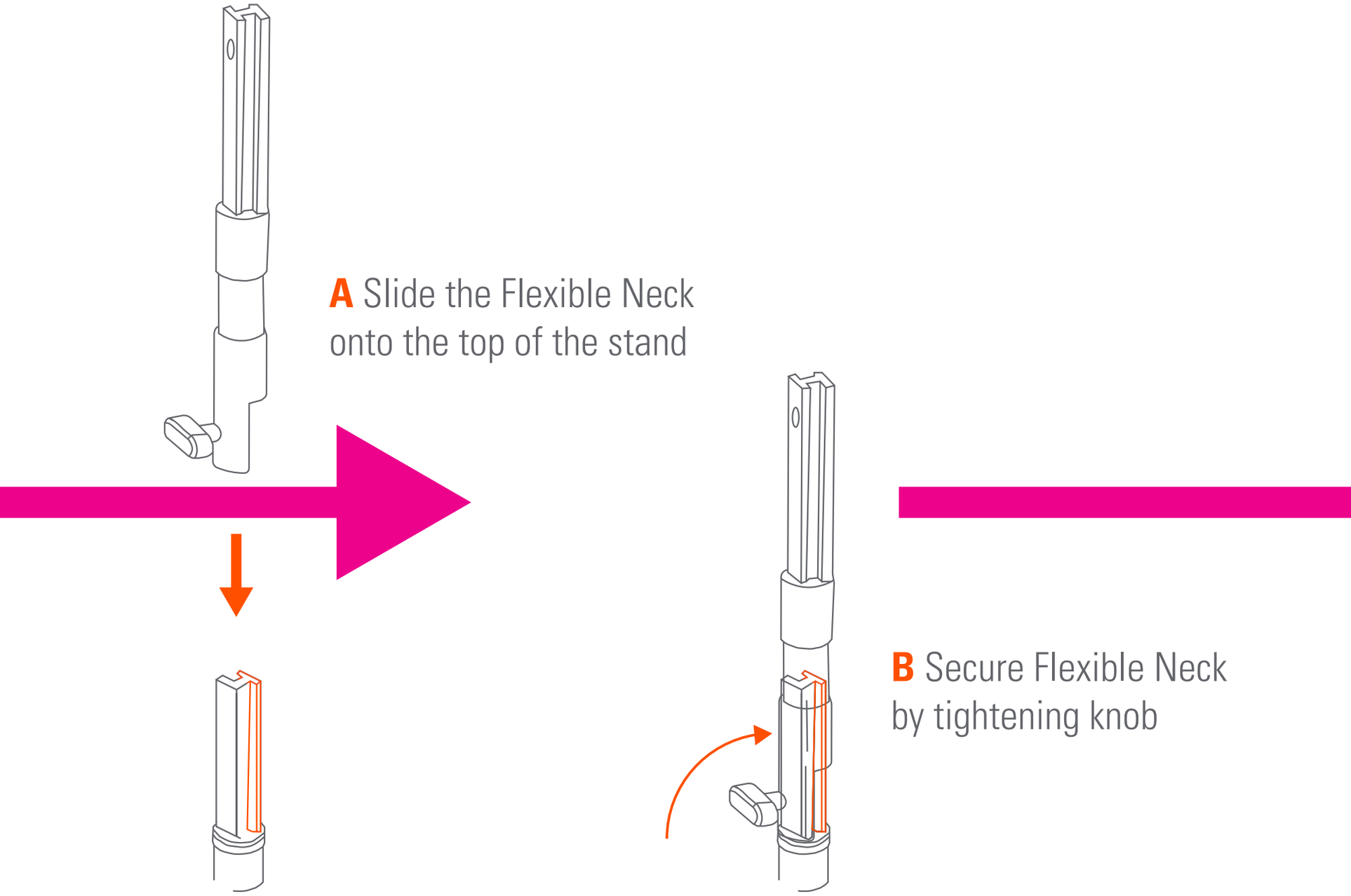

04 Mounting your ring light luminary - OPTION B

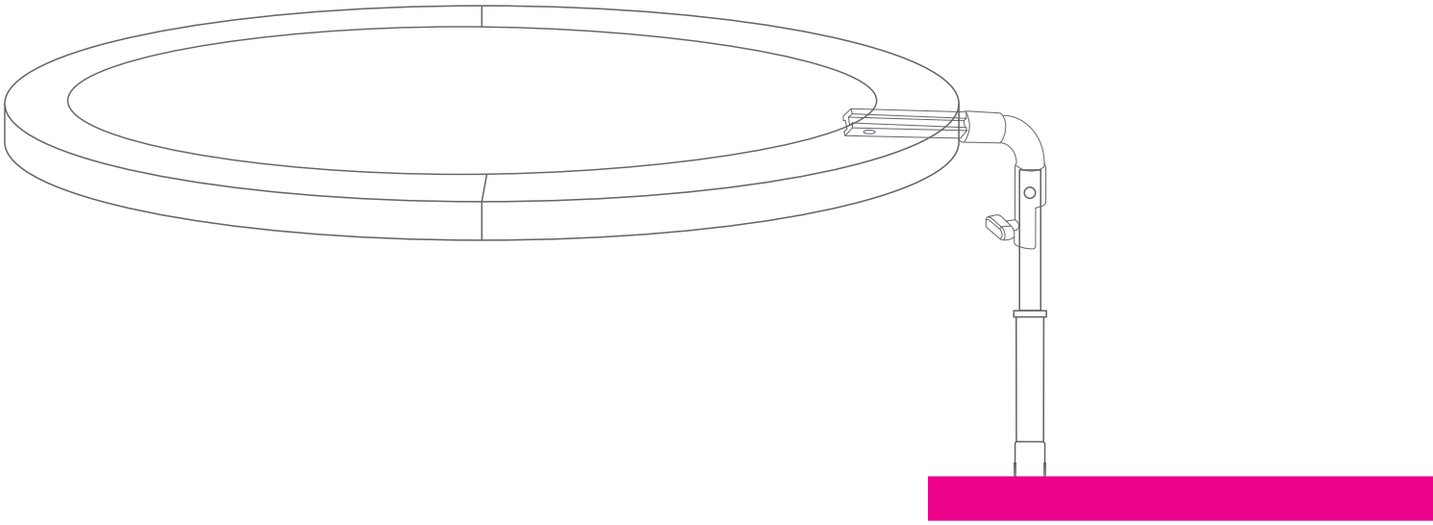

OPTION B

Mounting of the luminary onto the Flexible Neck

04 Attaching your Flexible Neck - OPTION B

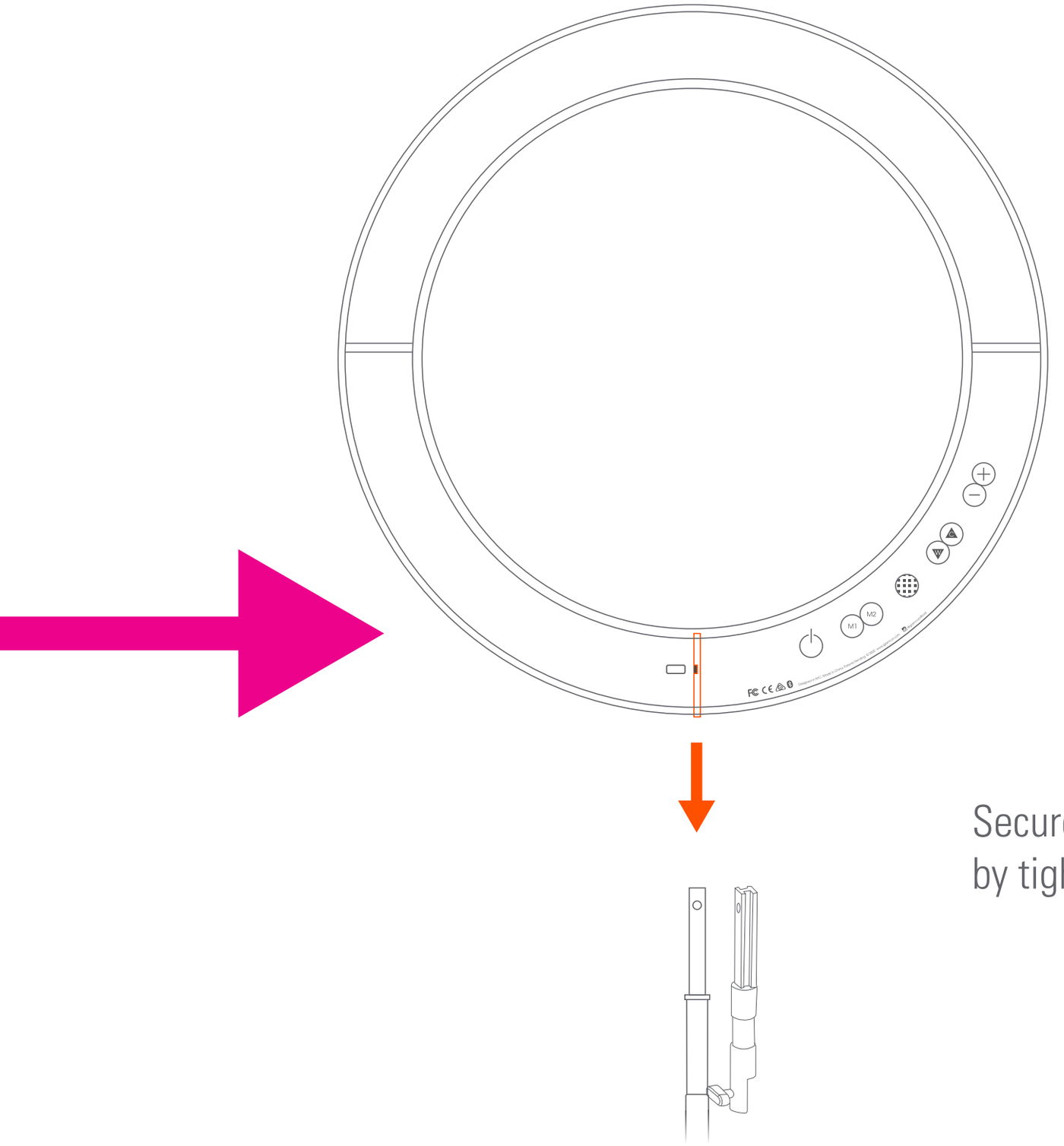

Secure Flexible Neck
by tightening knob

FCC Caution:

This device complies with part 15 of the FCC Rules. Operation is subject to the following two conditions: (1) This device may not cause harmful interference, and (2) this device must accept any interference received, including interference that may cause undesired operation.

Any Changes or modifications not expressly approved by the party responsible for compliance could void the user's authority to operate the equipment.

Note: This equipment has been tested and found to comply with the limits for a Class B digital device, pursuant to part 15 of the FCC Rules. These limits are designed to provide reasonable protection against harmful interference in a residential installation. This equipment generates uses and can radiate radio frequency energy and, if not installed and used in accordance with the instructions, may cause harmful interference to radio communications. However, there is no guarantee that interference will not occur in a particular installation. If this equipment does cause harmful interference to radio or television reception, which can be determined by turning the equipment off and on, the user is encouraged to try to correct the interference by one or more of the following measures:

-Reorient or relocate the receiving antenna.

-Increase the separation between the equipment and receiver.

-Connect the equipment into an outlet on a circuit different from that to which the receiver is connected.

-Consult the dealer or an experienced radio/TV technician for help.

The device has been evaluated to meet general RF exposure requirement. The device can be used in portable exposure condition without restriction.