Back

5 Take the best selfies on the planet!

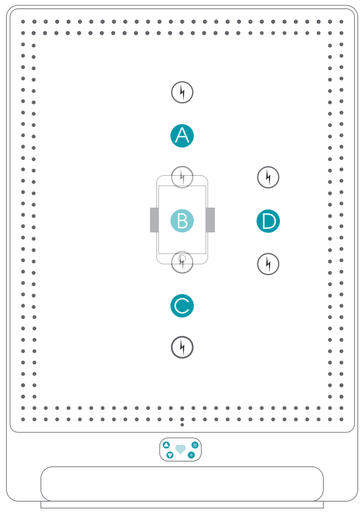

1. Place your iOS or Android phone into the Magnetic Phone Clip cradle
2. Become familiar with the locations of the magnets behind the mirror as indicated

   = Magnet locations
3. Choose to mount your Phone Clip onto position A, B, or C
4. Power on the Bluetooth[1] by pressing and holding the button on the remote for five seconds while pointing at the sensor described in instruction 3
5. Pair your phone in your Bluetooth settings
6. Open your camera app[2]
7. Press the button to take your selfie

6 See the details with the magnifying mirror

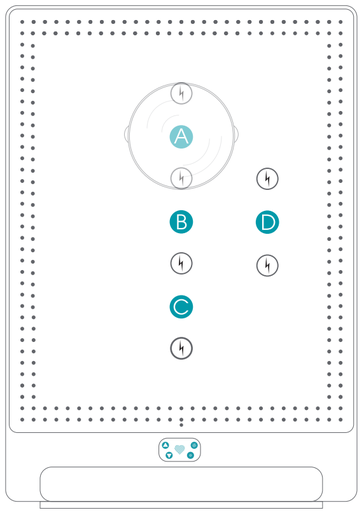

1. Become familiar with the locations of the magnets behind the mirror as indicated

   = Magnet locations
2. Choose to mount your Magnifying Mirror onto position A, B, or C

This device complies with Part 15 of the FCC Rules. Operation is subject to the following two conditions: (1) this device may not cause harmful interference, and (2) this device must accept any interference received, including interference that may cause undesired operation.

This Class B digital apparatus complies with Canadian ICES-003.
Cet appareil num'érique de la classe B est conforme à la norme NMB-003 du Canada.

WARNING: Changes or modifications to this unit not expressly approved by the party responsible for compliance could void the user's authority to operate the equipment.

NOTE: This equipment has been tested and found to comply with the limits for a Class B digital device, pursuant to Part 15 of the FCC Rules. These limits are designed to provide reasonable protection against harmful interference in a residential installation. This equipment generates, uses, and can radiate radio frequency, energy and, if not installed and used in accordance with the instructions, may cause harmful interference to radio communications. However, there is no guarantee that interference will not occur in a particular installation. If this equipmentt does cause harmful interference to radio or television reception, which can be determined by turning the equipment off and on, the used is encouraged to try to correct the interference by one or more of the following measures: (1) Reorient or relocate the receiving antanna. (2) Increase the separation between the equipment and receiver. (3) Connect the equipment into an outlet on a circuit different from that to which the received in connected. (4) Consult the dealer or an experienced radio TV technician for help.

CE FC Bluetooth™

RIKI LOVES RIKI™ and RIKI♥DIST™ are trademarks of GLAMCOR GLOBAL LLC
www.rikilovesriki.com • Copyright 2021. All rights reserved. Made in China. • US and foreign patents pending

Front

FCC Caution:
This device complies with part 15 of the FCC Rules. Operation is subject to the following two conditions: (1) This device may not cause harmful interference, and (2) this device must accept any interference received, including interference that may cause undesired operation.

Any Changes or modifications not expressly approved by the party responsible for compliance could void the user's authority to operate the equipment.

Note: This equipment has been tested and found to comply with the limits for a Class B digital device, pursuant to part 15 of the FCC Rules. These limits are designed to provide reasonable protection against harmful interference in a residential installation. This equipment generates uses and can radiate radio frequency energy and, if not installed and used in accordance with the instructions, may cause harmful interference to radio communications. However, there is no guarantee that interference will not occur in a particular installation. If this equipment does cause harmful interference to radio or television reception, which can be determined by turning the equipment off and on, the user is encouraged to try to correct the interference by one or more of the following measures:
-Reorient or relocate the receiving antenna.
-Increase the separation between the equipment and receiver.
-Connect the equipment into an outlet on a circuit different from that to which the receiver is connected.
-Consult the dealer or an experienced radio/TV technician for help.

The device has been evaluated to meet general RF exposure requirement. The device can be used in portable exposure condition without restriction.

RIKI TALL
COUPLE

Inside left

1 Assemble your mirror into the stand

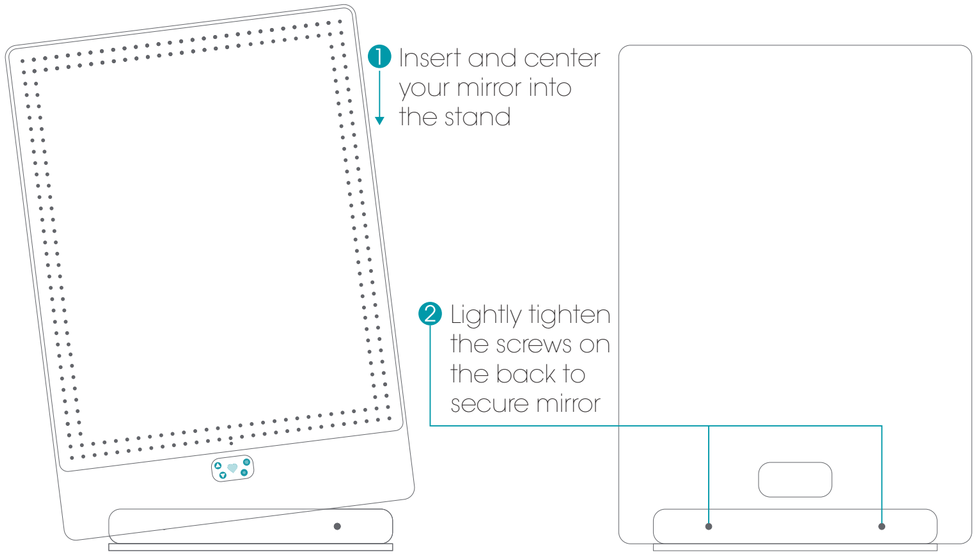

2 Power up!

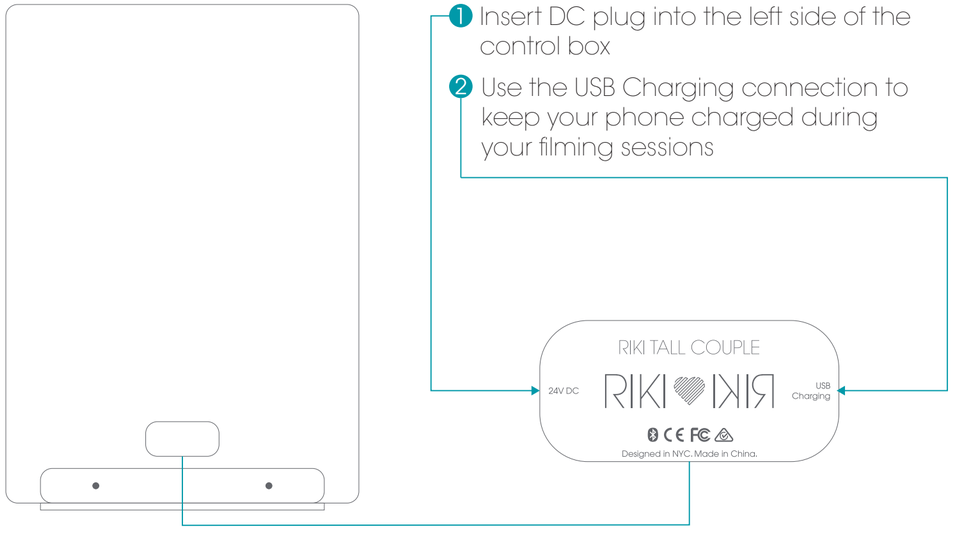

NEED SOME HELP?
Email us at help@rikilovesriki.com

WANT TO SAY HI AND HAVE FUN?
#rikilovesriki

Inside Right

3 Learn the controls

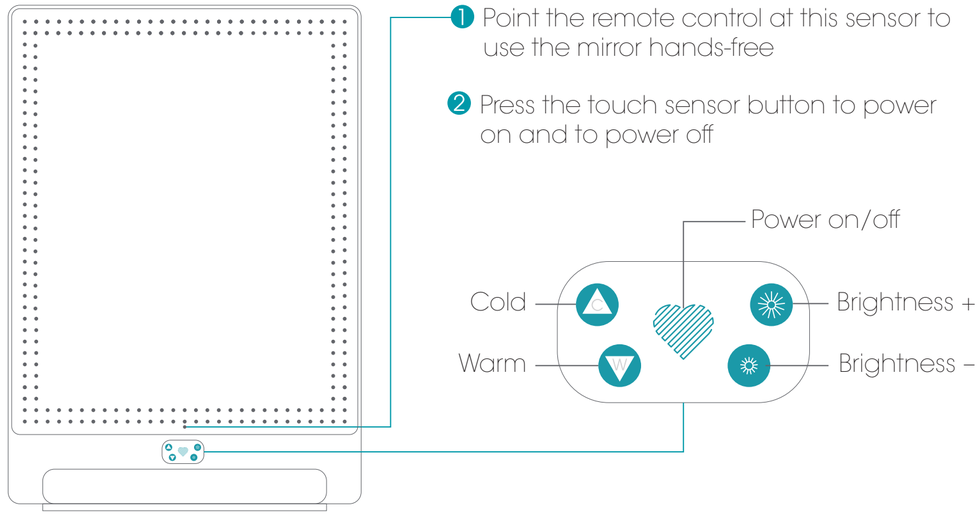

4 Learn the remote control

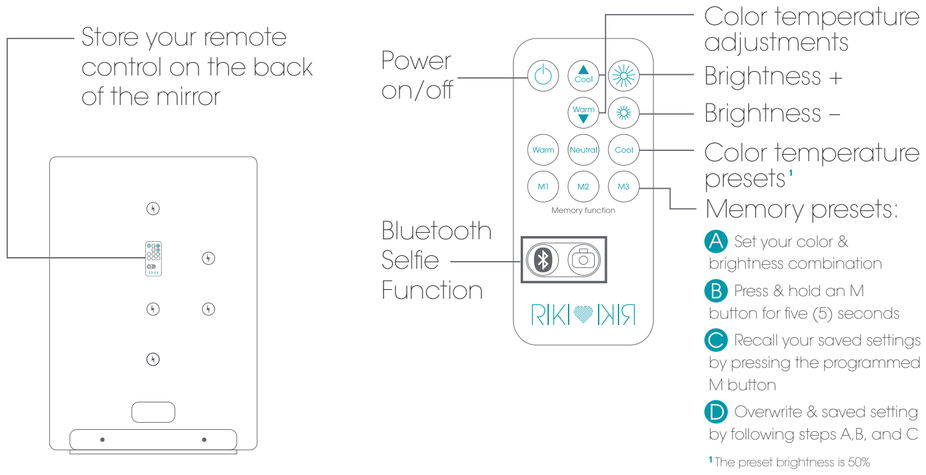

[1] The power for the Bluetooth is independent from the power for the mirror. Power off the Bluetooth by pressing and holding the Bluetooth button for five (5) Seconds.

[2] On Android phones, enable the volume button to take pictures.