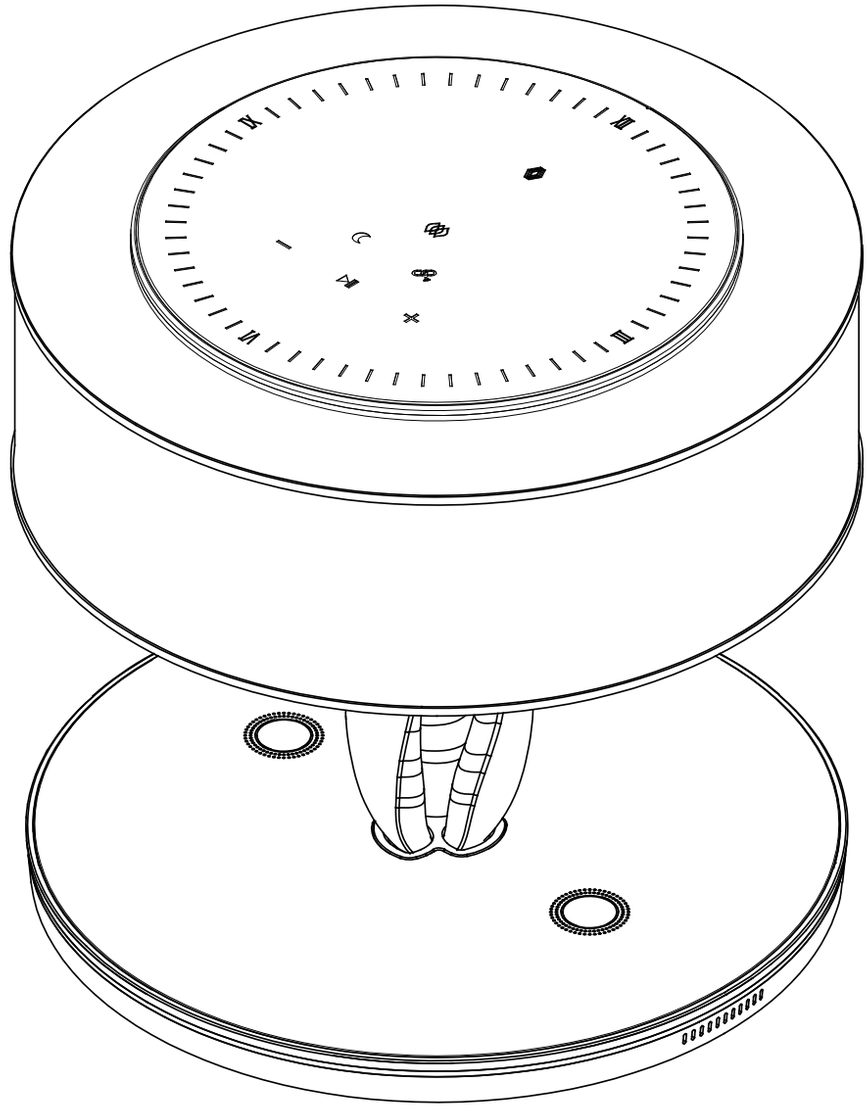

User Guide（English）

Dance of Light Wireless Charging Bluetooth Speaker Lamp

Introduce

We seek the light, we see the light, and we feel the light. When light reflects in a room, it dances in the air, changing into different forms on a mirror; giving everything it illuminates a steady stream of energy.
We endow this energy to wireless music, wireless charging and stepless dimming functions with the latest high technology, presenting the Dance of Light in front of you.
Let's dance with the light.

Packaging Contents Specification

Dance of Light x1
Charging Adaptor x1
User Guide x1

Model Name:Dance of Light
Wireless Charging:10W*2
Output Voltage:9V*2
Max Potput Current:1.1A*2
Conversion Rate:70%-75%

BT Version:V5.0
BT Chipset:Mountain BP1048
BT Frequency:2.4GHZ
BT Profile:A2DP,AVRCP
Input power:12V 4A
Speaker power:5W*2(Type N1)
15W*2 (Type N2)
Resistance: 4Ω

Working Conditions

Indoor use only
Temperature: -10℃～40℃/-40℉～104℉
Humidity: 40%～60%

Precautions

Please read the user guide before usage. Improper operation may cause direct/potential damage to this product.

1. Do not disassemble the product or attempt to fix it;
2. Please be sure to use the original charging adapter provided, and do not use the matching adapter to charge other products;
3. Do not replace any parts of this product;
4. Do not crush, puncture, dispose in fire, immerse in the water or other liquids;
5. Do not expose this product to intense sunlight, heat or any high-humidity environment;
6. Avoid dropping, bumps, abrasions and impacts;
7. If there is any reason to believe that there is damage to the product, please stop using it;
8. If you believe there is any damage or quality issue, please contact our customer support;
9. Children using this product, needs the supervision of an adult.

Table of Features

Features / P/N	Stepless LED	BT Speaker	Sleeping Mode	TWS	Analog Clock	Music	Quick Charge
FY-M2202-N1/N2	●	●	●	●	●	●	●

Appearance & Interface Description

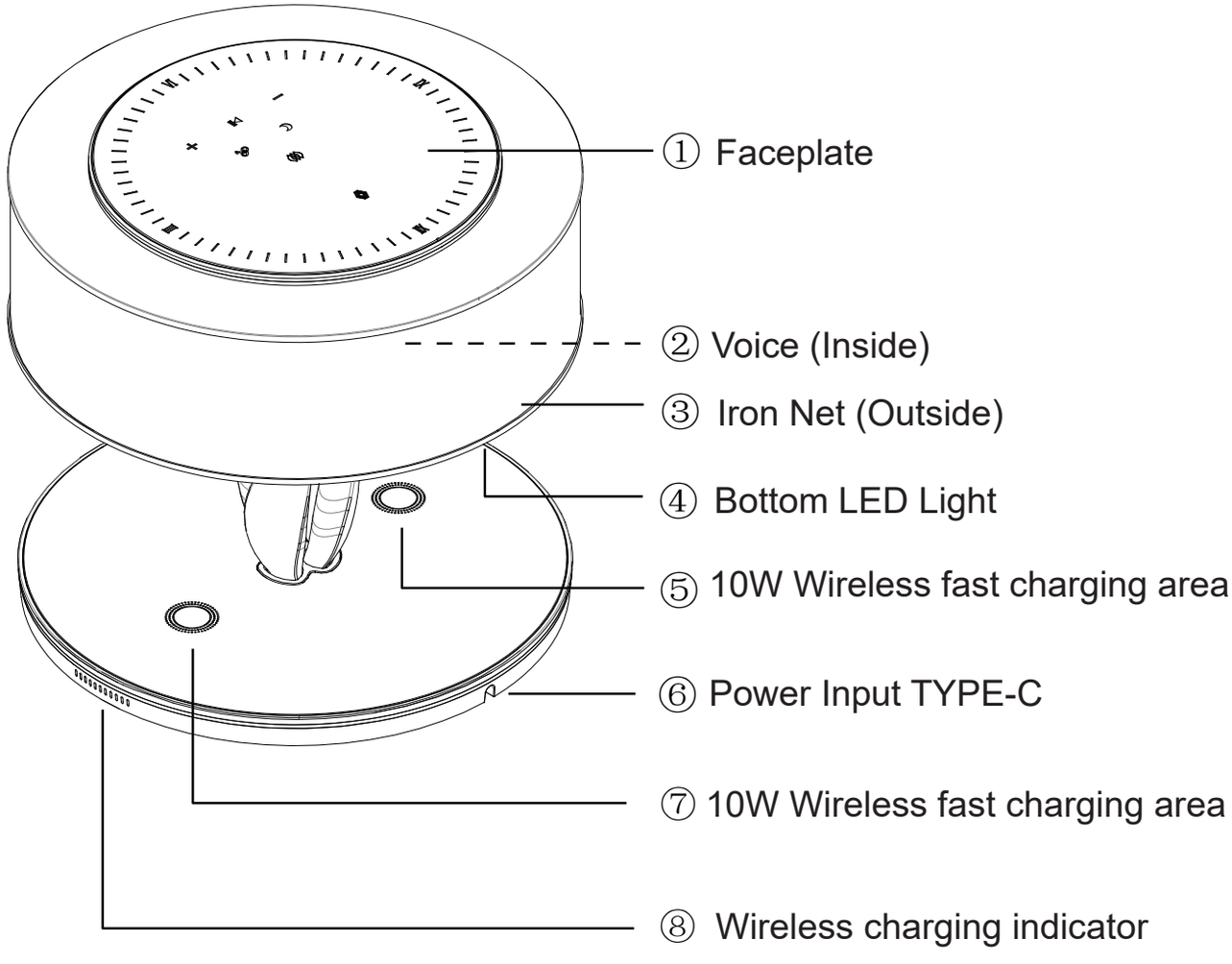

English

Appearance & Interface Description

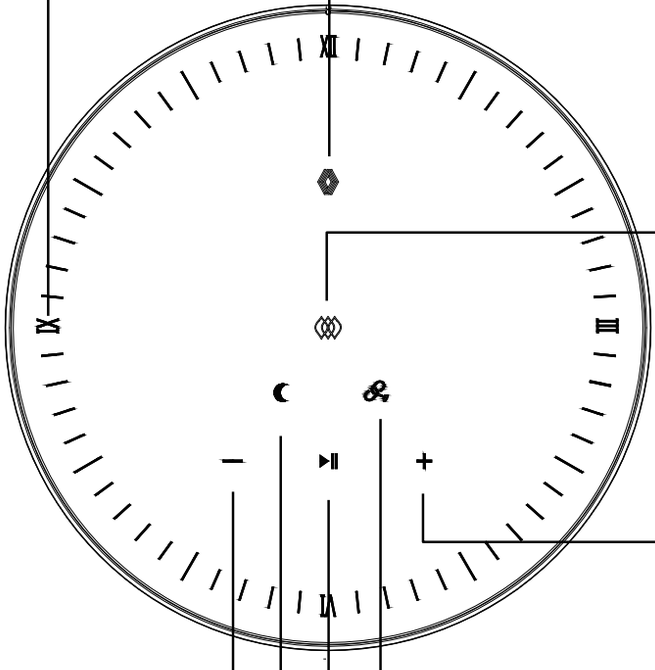

① Display analog clock (hour and minute hands)

② When pressing the diamond symbol for a longer period, the LED lamp scale will increase from 12 o 'clock clockwise and the bottom of the LED lamp will increase the brightness at the same time. When the scale brightens a full circle, the counterclockwise direction automatically reduces the scale and the bottom of the LED lamp at the same time reduces the brightness and so on. When pressed a short while on the diamond symbol, will on or off the function and bottom LED light changes simultaneously.

③ In the middle of the Bluetooth connection symbol there is a purple flash. When powered on, it automatically searches for Bluetooth.
Short press to choose analog clock/LED light along with music rhythm/faceplate light ON or OFF function.
Long press to disconnect the Bluetooth.

④ Short press on the volume key + / longer press for next song. There is volume cap tone once the it reaches maximum limit.

⑤ Short press to search for TWS, there will be a prompt tone when connecting to the TWS and then short press to disconnect the TWS and there will be a prompt tone.

⑥ Short press to play/pause.

⑦ Short press the sleep mode, after 30 minutes the sound stops and the Light goes off

⑧ Short press the volume key - /long press for the last song.

English

Operating Instructions

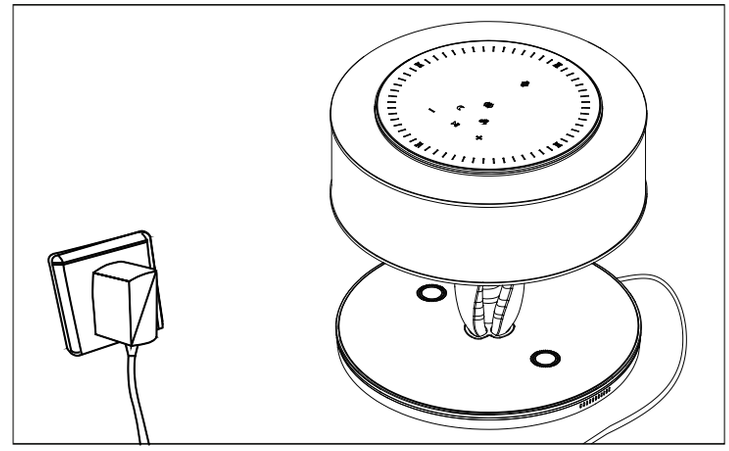

1. Plugging in AC Adapter
2. Bottom LED Control

- After plugging in the adapter,The light will be 50%
- Long press the diamond key" ◆ " on the top panel, both the panel and the bottom lighting will increase clockwisely. When the lighting circle close, both the faceplate and bottom light goes out counterclockwise, and so on.
- Short press " ◆ " on the diamond key to choose 1/4, ½, ¾ or full of the lighting circle or turn off the light.

3.Wireless Charging

- Place your QI Wireless Charging enabled Smartphone over the Wireless Charging Pad.
- When charging, the wireless charging indicator light turns blue and the indicator light turns off in about 10 seconds.
- The mobile phone or device that supports direct wireless charging should be flatly attached to the charging area for charging. The vertical distance of wireless charging is within 5mm. If it exceeds the range, it cannot be charged. When there is a metal object in the charging area, the color of the charging indicator changes from blue to orange. The orange light is an alarm light and the device cannot be charged.

4. Device connection to Dance of Light

- When powered on or touch the Bluetooth connection symbol " ⁂ " in the middle of the dance of light will flash slowly in purple and automatically searches for Bluetooth.
- Turn on the Bluetooth function on your device and search for "Dance of Light".
- Click on the device to confirm the time synchronization and match "Dance of Light", there will be a prompt sound when the connection is successful. " ⁂ " Thereafter the flash will change from purple to orange.
- Or touch the top face panel to awake function keys, " + " " — " for volume control, long press on " + " for next song, long press " — " for the last song, short press " ▷II " for Play/Pause.
- Long press " ⁂ " to disconnect the Bluetooth

5. Sleeping mode

- Short press symbol " ☾ " on the top panel, the light turns from dark to bright and the sleeping mode is activated, the bottom light will automatically be adjusted to the darkest condition. The sound stops and the LED light goes off after 30 minutes.
- Short press symbol " ☾ " again on the top panel, the light changes from bright to dark and the sleeping mode is turned off.

English

Operating Instructions

6. TWS Function

- Turn on another Dance of Light product as a secondary device.
- A mobile phone or device connects 1pc of the product as the host. Pressing " 🔗 " ,the prompt sound will be heard and it automatically searches for another Dance of Light product.
- Turn on another product as a subordinate After the subordinate is connected " 🔗 ",to the master product, the master will prompt the sound. and the light changes from dark to bright. Operate any one product, which can control the sound function of another product at the same time.
- Press the master unit again " 🔗 " and the light will turn from bright to dark. The prompt sound will be heard and the two products will disconnect the TWS connection.

7.Analog clock, Music

- Short press on" ⁂ " to choose: " ◆ " Light on, all other lights out/ " + ▷II − " light on/sleeping mode" ☾ " and TWS" 🔗 " light on," ⁂ " light on, analog clock light on/Analog clock LED flash with music rhythm/ " ◆ " light on, all other lights out, and so on.
- When the Dance of Light synchronized with mobile phone, hands of the analogy clock refers to the lighting on the circle marked with Roman characters 12, 3, 6, 9, minute hands refer to the flickering light on the circle which marked by 60 scales(1 minute/scale) on the circle.
- The circle lighting will flash along with the music rhythm starting from Roman Number VI to both sides, the stronger the rhythms are, the more LED on both sides will be lit up.

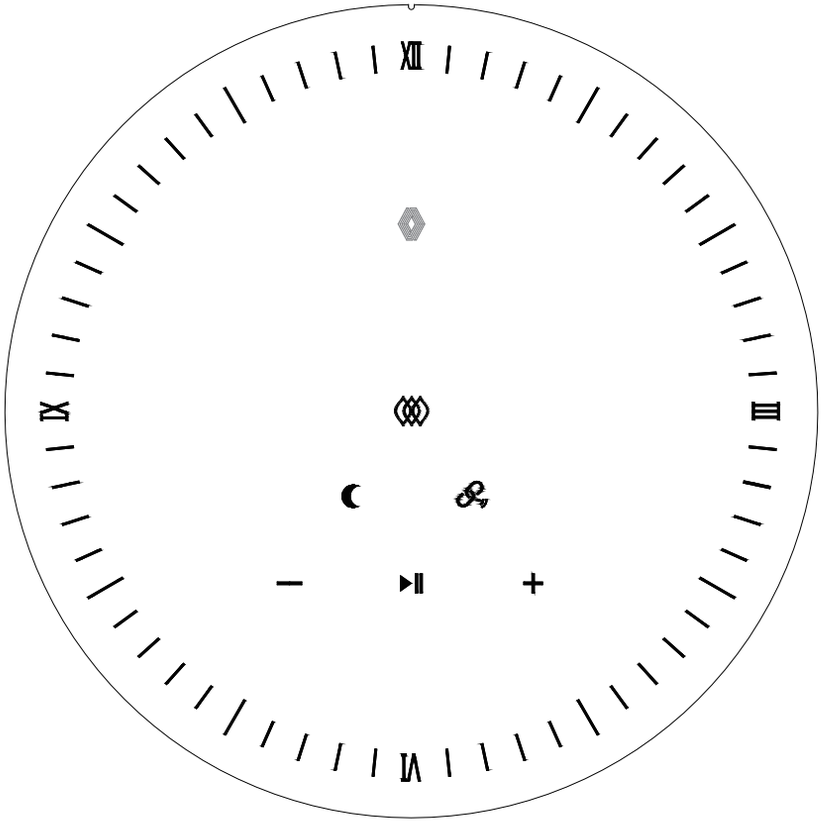

English

This device complies with part 15 of the FCC Rules. Operation is subject to the following two conditions: (1) This device may not cause harmful interference, and (2) this device must accept any interference received, including interference that may cause undesired operation.
Any changes or modifications not expressly approved by the party responsible for compliance could void the user's authority to operate the equipment.
NOTE: This equipment has been tested and found to comply with the limits for a Class B digital device, pursuant to Part 15 of the FCC Rules. These limits are designed to provide reasonable protection against harmful interference in a residential installation. This equipment generates, uses and can radiate radio frequency energy and, if not installed and used in accordance with the instructions, may cause harmful interference to radio communications. However, there is no guarantee that interference will not occur in a particular installation.
If this equipment does cause harmful interference to radio or television reception,
which can be determined by turning the equipment off and on, the user is encouraged to try to correct the interference by one or more of the following measures:
-- Reorient or relocate the receiving antenna.
-- Increase the separation between the equipment and receiver.
-- Connect the equipment into an outlet on a circuit different
from that to which the receiver is connected.
-- Consult the dealer or an experienced radio/TV technician for help.

For BT:
To maintain compliance with FCC ’ s RF Exposure guidelines, This equipment should be installed and operated with minimum distance between 20cm the radiator your body: Use only the supplied antenna.

For WPT:
The equipment complies with FCC radiation exposure limits set forth for an uncontrolled environment. During the operation of device a distance of 15 cm surrounding the device and 20 cm above the top surface of the device must be respected.