Motorized Treadmill
Owner's Manual

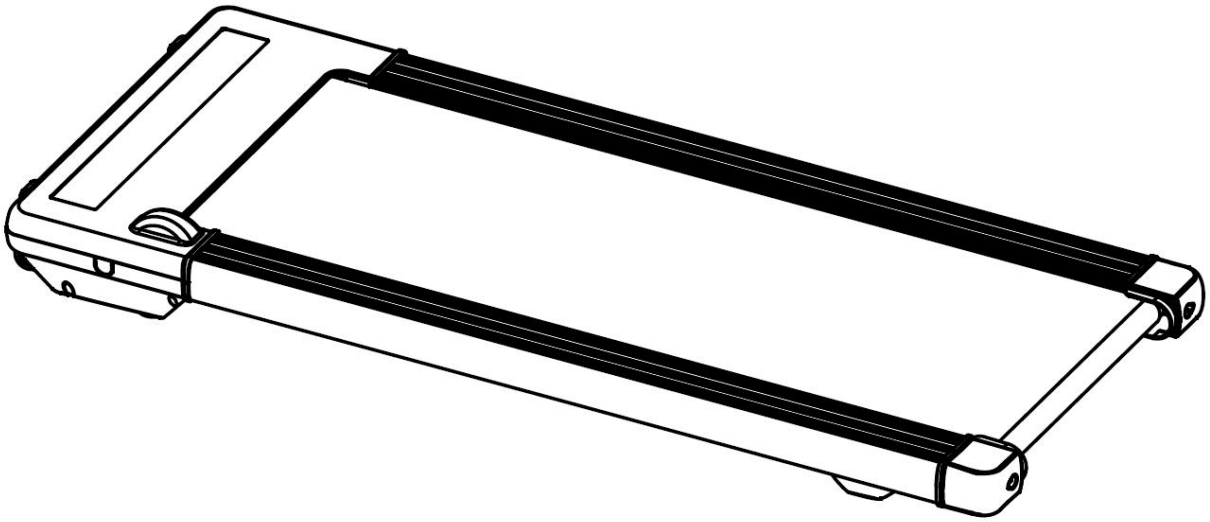

This device complies with part 15 of the FCC Rules. Operation is subject to the following two conditions: (1) This device may not cause harmful interference, and (2) this device must accept any interference received, including interference that may cause undesired operation.

Note: This equipment has been tested and found to comply with the limits for a Class B digital device, pursuant to part 15 of the FCC Rules. These limits are designed to provide reasonable protection against harmful interference in a residential installation. This equipment generates, uses and can radiate radio frequency energy and, if not installed and used in accordance with the instructions, may cause harmful interference to radio communications. However, there is no guarantee that interference will not occur in a particular installation. If this equipment does cause harmful interference to radio or television reception, which can be determined by turning the equipment off and on, the user is encouraged to try to correct the interference by one or more of the following measures:

—Reorient or relocate the receiving antenna.
—Increase the separation between the equipment and receiver.
—Connect the equipment into an outlet on a circuit different from that to which the receiver is connected.
—Consult the dealer or an experienced radio/TV technician for help.

Safety Instructions

Warning: Now here we suggest that you should consult with your physician or health professional before starting your workout, especially for the age up to 35 old or once-health problem people. We take no responsible for any troubles or hurts if you don't following our specification. Treadmill will be carefully assembled and covered the motor shield, then connect to the power.

Attention

1.Ensuring the safety clamps were attached to the clothing or belts before using the treadmill.

2.Please do not insert any items to any part of the equipment, which would damage the equipment.

3.Position the treadmill on a clear, level surface. Do not place the treadmill on thick carpet as it may interfere with proper ventilation. Do not place the treadmill near water or outdoors.

4.Never start the treadmill while you are standing on the walking belt. After turning the power on and adjusting the speed control, there may be a pause before the walking belt begins to move, always stand on the foot rails on the sides of the frame until the belt is moving.

5.Wear appropriate clothing when exercising on the treadmill. Do not wear long, loose fitting clothing that may be caught in the treadmill. Always wear running or aerobic shoes with rubber soles.

6.Keep the children and pets away from the treadmill while starting workout. Safety area:50CM-100CM around the treadmill.

7.Don't exercise in 40-Minutes after dinner.

8.The equipment is suitable for adults, Juveniles need be accompanied with adults while workout.

9.You must hold on to the handrails until you become comfortable and familiar with the treadmill at your first start the workout.

10.Treadmill is indoor-using equipment, not outdoor-using for avoiding damage. Keep the store-place clean and flat, drying. Prohibiting the other purpose using, only for workout.

11.Please purchase the power-line to the distributor or contact with our company directly, for the power-line only equip to the treadmill.

12.If the treadmill should suddenly increase in speed due to an electronics failure or the speed being inadvertently increased, the treadmill will come to a sudden stop when the pull pin is disengaged from the console.

13.Do not connect line to the middle of cable; do not lengthen cable or change the cable plug; do not put any heavy thing on cable or put the cable near the heat source; forbid using socket with several

holes, these may cause fire or people may be hurt by the power.

14.Cut off the power when the equipment is not used. When the power is cut off , do not pull the power line to keep the wire unbroken. Insert the plug to the socket with the safety ground circuit, for the power-line is professional equipment .You must contact with the professional people directly while the line is damaged.

15.This Treadmill only for home-using.

16.Warning: incorrect or excessive exercise could lead to harm.

17.Products need check for one time in every month, if there are some damage, please change the spare parts. Before change it, do not use the treadmill.

18.If you feel dangerous when exercising, you should use both sides of the armrest to jump off the ground or jump off the platform on both sides of the platform.

19.Exercise after the electric treadmill rear to have 2000mmX1000mm safe area, to prevent accidents when there is an emergency escape space.

20.The free space required for safe operation during exercise is 2000mm (length) X1000mm (width) X2250mm (high).

Assembly Instructions

When you open the carton, and you will find the below parts in the carton.

Ⅰ 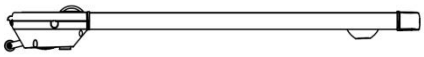	Ⅱ 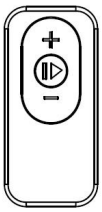	Ⅲ 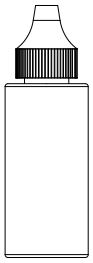
Ⅳ	Ⅴ	Ⅵ user manual

No	DES.	Specification	Qty
Ⅰ	Main frame		1
Ⅱ	Remote control		1
Ⅲ	Oil bottle		1
Ⅳ	Allen wrench		1
Ⅴ	Power wire		1
Ⅵ	User manual		1

This product is free of assembly, open the box, remove the treadmill, connected to the power can be used.

Step 1 :

Open the carton, get out the above spare parts, and put the Main Frame onto the level ground.

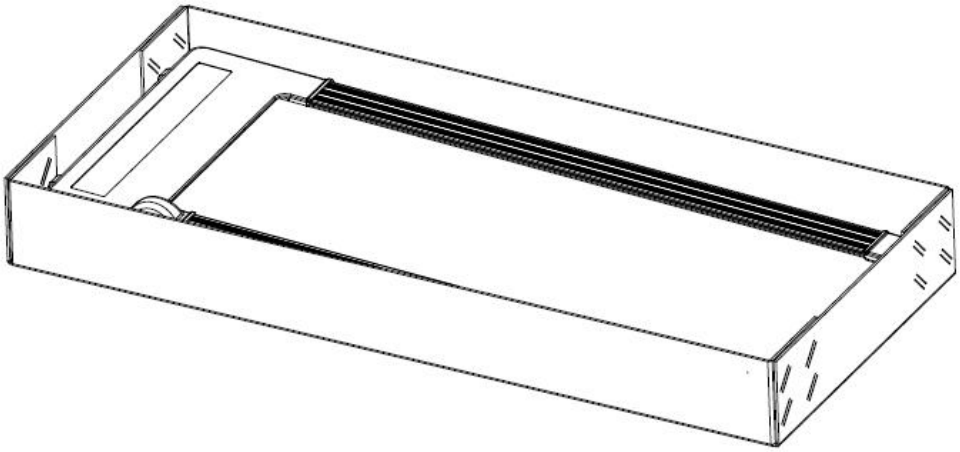

Step 2 :

Plug in the treadmill and turn on the power, put the safety key on the treadmill, you could start to use treadmill.

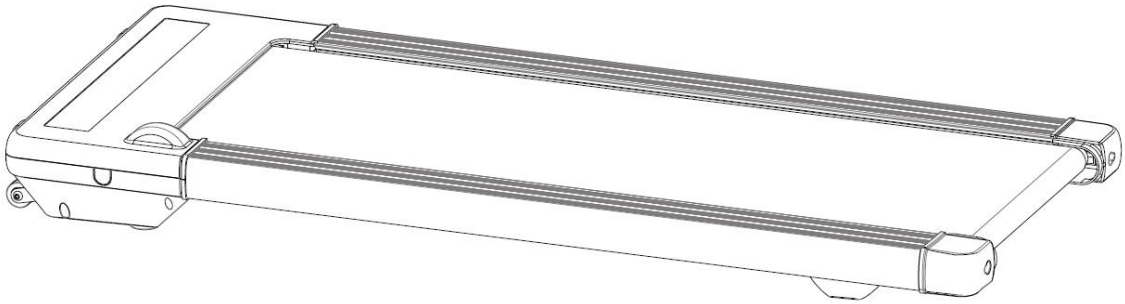

ATTENTION : Do the following operation after checking everything is OK. Before you use the treadmill, please read the instruction carefully.

Storage and Moving Instruction

1.storage:

This treadmill have two obvious advantages: 1. storage is simple and fast; 2. Small space occupation；

CAUTION: It's not safe by positioned vertically.

2.Moving the Treadmill:

The treadmill has a built-in wheel that can be easily moved.

CAUTION: Before moving the treadmill, make sure that the power cord of the treadmill has been removed, or it may damage the plug and socket.

Technical Parameter

BUILT UP SIZE(mm)	1530*635*150mm	POWER	As the rating label showing
FOLDED SIZE(mm)		MAXIMUM OUTPUT POWER	As the rating label showing
RUNNING AREA(mm)	1250*450 mm	SPEED RANGE	0.8-6.0KM/H
NET WEIGHT	28.5KG	MAX USER WEIGHT	100KG
WINDOW DISPLAY	**SPEED, TIME, DISTANCE, STEPS, CALORIES**		

Grounding Methods

This product must be grounded. If it should malfunction or breakdown, grounding provides a path of least resistance for electric current to reduce the risk of electric shock. This product is equipped with a cord having an equipment-grounding conductor and a grounding plug. The plug must be plugged into an appropriate outlet that is properly installed and grounded in accordance with all local codes and ordinances.

DANGER

Improper connection of the equipment-grounding conductor can result in a risk of electric shock. Check with a qualified electrician or serviceman if you are in doubt as to whether the product is properly grounded. Do not modify the plug provided with the product – if it will not fit the outlet, have a proper outlet installed by a qualified electrician. This product is for use on a nominal 220-240/100-120-volt circuit and has a grounding plug that looks like the plug illustrated in sketch A in following figure. Make that the product is connected to an outlet having the same configuration as the plug. No adapter should be used with this product. **(This picture is just for reference)**

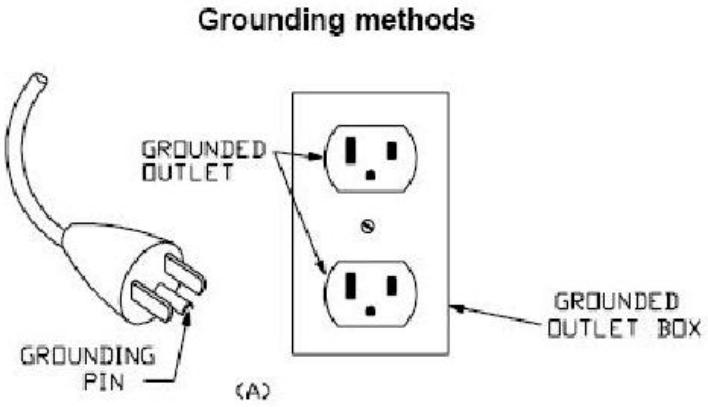

Exercise Instructions

Warm up stage：

If you are over 35 years old, or not very healthy, also it's your first time exercise, please consult with your doctor or professional person.

Before you use the motorized treadmill, please learn how to control the machine, know well how to start, stop, adjust the speed and so on, don't stand on the machine at this time. After that, you can use the machine. Stand on anti-slip pad both sides and handle the handle bar with your both hands. Keep the machine at the low speed about 1.6~3.2 km/h, then test the running machine by one foot, after get used to the speed, then you can run on the machine and you can add the speed between 3 and 5 km/h. Keep the speed about 10 minutes, then stop the machine.

Exercise stage：

Learn how to adjust the speed and incline before using. Walk about 1 km at stable velocity and write down the time, it will take you about 15-25 minutes. If walk at 4.8 km/h, it will take you about 12

minutes in 1 km. If you feel comfortable at the stable velocity, you can add the speed and incline, after 30 minutes, you can have good exercise. At this stage, you can not add the speed or incline too much at one time, it can keep you feel comfortable.

Exercise intensity：

Warm up at the speed 4.8 km/h in 2 minutes, then add the speed to 5.3 km/h and keep walking in 2 minutes, then add to 5.8km/h and walk in 2 minutes. After that, add up 0.3 km/h in each 2 minutes, until rapid breath but not feel comfortable.

Calorie burning---the best effective way

Warm-up for 5mints by the velocity:4-4.8KM/H, then slowly increase the speed by 0.3KM/H/2Mints ,until up to the stable speed which you feel is comfortable for 45Mints.For improving the intensity of movement, you can maintain the speed during 1H of TV program, then increase the speed by 0.3KM/H each Advertisement interval time, after that return to the original speed . You can acquaint the best efficiency of workout for calorie burning during the advertisement time and subsequent heart frequency increasing time. Finally , you should slow down the speed step by step for 4Mints.

Exercise frequency：

The cycle time: 3-5times/Week, 15-60mints/Times.Make up the schedule of workout scientific, not only for your hobby.

You can control the running intensity through adjusting the velocity and incline of treadmill. We suggest that you don't set the incline at first; improve the incline is the effective way to strengthen the exercise's intensity.

Consult with your physician or health professional before starting your workout. The professional people can help you make up the suitable exercise time-chart according to your age and health condition, determine the velocity of movement, the intensity of exercise. Please stop at once, If you feel chest tightness, chest pain, irregular heart beat, breath difficulty, dizziness or other discomfort during exercise. You should consult with your physician or health professional as keep going.

You can choose the normal walking speed or the jogging speed ,if you always take workout with treadmill.

If you don't have enough experiences or confirm the testing velocity ,you can follow the instruction :

Speed 0.8-3.0KM/H not well physical

Speed 3.0-4.5KM/H less movement and workout

Speed 4.5-6.0KM/H normal walking

WARM UP STAGE

Before exercise, it is better to do stretching exercises . Warm muscles stretch more easily, so the first of 5 ~ 10 minutes to warm up. Then in accordance with the following methods to stop and do stretching exercises - do five times, each leg every time 10 seconds or more time to do it again after the end of the exercise.

1. Down the stretch: knees slightly curved, the body bent forward slowly, so that the back and shoulders relaxed, hands try to touch your toes. Maintain 10 to 15 seconds, then relax. Repeat three times to do (see Figure l).

2. Hamstring stretch: sitting on the clean seat, put one leg straight. Inward close to the other leg to make it close to the inside leg straight. hand try to touch the toes. Maintain 10 to 15 seconds, then relax. Repeat for each leg do three times (see Figure 2).

3. Legs and feet tendon stretch: two on the Rotary wall or tree stand, one foot in the post. Keep legs straight and heel to tilt the direction of the wall or tree. Maintain 10 to 15 seconds, then relax. Repeat for each leg do three times
(see Figure 3).

4 .Quadricones stretch: the left hand wall or table Cu master balance, and then stretched his right hand back to seize the right foot to the buttocks with slowly pull until you feel the front thigh muscles tense. Maintain 10 to 15 seconds, then relax. Repeat for each leg to do three times (see Figure 4).

5. Sartorius muscle (inner thigh muscles) stretch: Foot In contrast, the knee outward to sit down. The hands grasp the feet to the groin pull. Maintain 10 to 15 seconds, then relax. Repeat three times(see Figure 5).

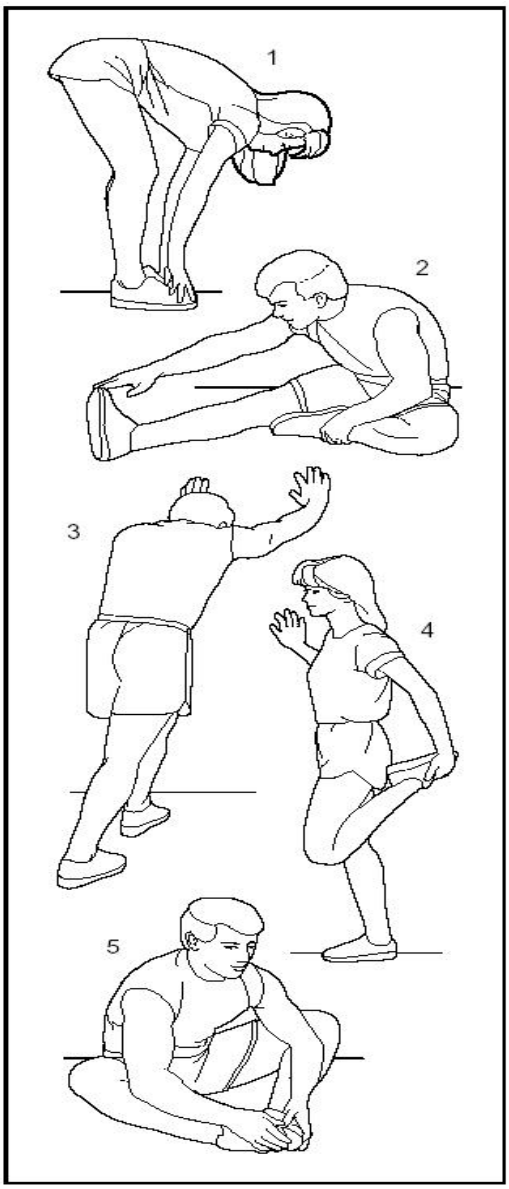

Exploded Drawing

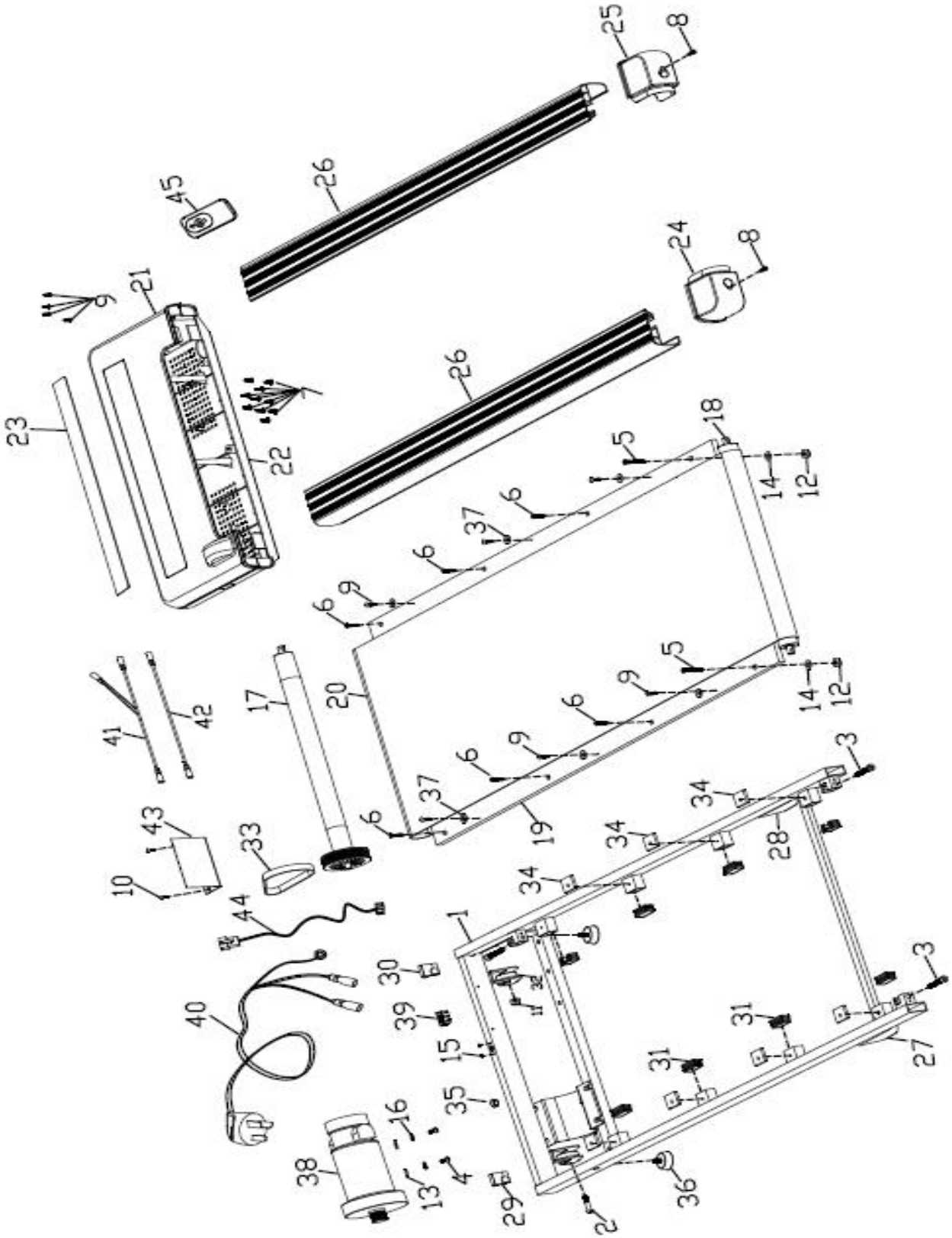

Parts List

NO.	DESCRIPTION	QTY	NO.	DESCRIPTION	QTY
1	Main frame	1	21	motor upper cover	1
2	Bolt M8*35	2	22	motor bottom cover	1
3	Bolt M8*45	3	23	Computer pannel	1
4	Bolt M8*15	2	24	Left rear tailstock	1
5	Bolt M6*45	2	25	Right rear tailstock	1
6	Bolt ST4.8*30	6	26	Side rail	1
7	Bolt ST4.2*16	11	27	Left footpad	1
8	Bolt ST4.2*16	2	28	Right footpad	1
9	Bolt ST4.2*16	10	29	Left front adjusting pad	1
10	Bolt ST5.0*10	2	30	Right front adjusting pad	1
11	Nut M8	3	31	Tube plug	8
12	Nut M6	4	32	Wheel	2
13	Flat washer ϕ8.5* ϕ17*1.5	2	33	Motor belt	1
14	Flat washer ϕ6.5* ϕ13*1.5	2	34	Rubber pad	8
15	Lock Washer ϕ5.6* ϕ10*0.6	2	35	Buckle	1
16	Elastic washer 8	2	36	Pad	2
17	Front roller	1	37	Side Rail fixing buckle	6
18	Rear roller	1	38	DC motor	1
19	Running board	1	39	Switch	1
20	Running belt	1	40	Wire	1

41	connect cable 1	1	46	Computer PCB	1
42	connect cable 2	1	47		
43	Control	1	48		
44	connect cable 3	1	49		
45	Remote control	1	50		

Computer Operation Guide

1. LED WINDOW DISPLAY

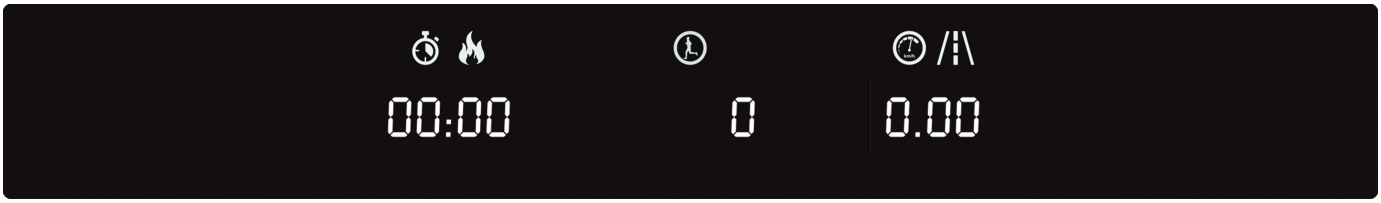

“ SPEED ” :Under running status displays the current values for speed, the speed range is 0.8-6.0KM / H.

“TIME” : Displays the time for sport. The time ranges from 0:00 to 99:59.

“DIS” : Displays the distance traveled. The account value from 0.00-99.9.

“CAL” : Displays the calorie consumption and heart rate. When you display the calorific value, from 0.00-999.

“STEP “ : Displays the walking steps, from 0-9999.

2.BUTTON FUNCTION:

“ | ▷” button: Start /Stop the treadmill.

“ + ” button: Speed up;

“ – ” button: Speed down;

3.SLEEP FUNCTION:

Stopped for more than 6 minutes without any operation, the system completed all showed off into the body of sleep state. Press any key to wake up.

4. TURN OFF:

At any time by turning off the power switch can turn off the treadmill, this does not damage the treadmill.

5. ATTENTION:

Appeared the abnormalities during movement, press the stop button, the treadmill will quickly decelerate to stop;

If any questions of the treadmill. please contact your dealer, non-professionals, do not attempt to disassemble or repair, in order to avoid equipment damage.

Maintenance guide

Warning: ALWAYS UNPLUG THE TREADMILL FROM THE ELECTRICAL OUTLET BEFORE CLEANING OR SERVICING THE UNIT.

Clean: General cleaning or the unit will greatly prolong the treadmill.

Keep treadmill clean by dusting regularly. Be sure to clean the exposed part of the deck on either side of the walking belt and also the side rails. This reduces the build up of foreign material underneath the walking belt by wearing the clean running shoes.

Warning: Always unplug the treadmill from the electrical outlet before removing the motor cover. At least once a year remove the motor cover and vacuum under the motor cover.

RUNNING BELT AND DECK LUBRICATION

This treadmill is equipped with a pre-lubricated, low maintenance deck system. The belt/ deck friction may play a major role in the function and life of your treadmill, thus requiring periodic lubrication. We recommend a periodic inspection of the deck. You need contact with our service center if you find the damage of the deck.

We recommend lubrication of the deck according to the following timetable:

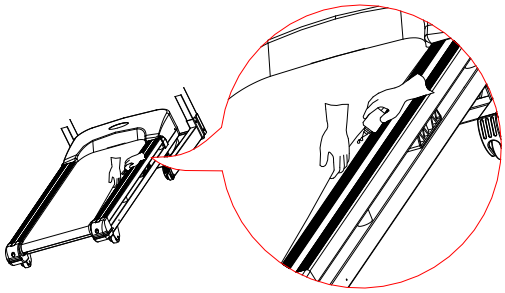

Light user (less than 3 hours/ week)	once six months
Medium user (3-5 hours/ week)	once three months
Heavy user (more than 5 hours/ week)	once a month

We recommend that you buy the lubrication from our distributor or directly to our company.

Attention: Any repair need the professional technician.

We suggest that you should cut off the power for 10Mints after keep running 2HS ,so that it's good for maintain the treadmill.

For avoiding the slipping during running , the belt not too loose; for avoiding the more abrasion between the roller and belt and maintain the machine's good running ,the belt not too tight. You can adjust the distance between plates and belt , the belt be away from the plates about 50-75mm on both sides ,if the best not too tight and loose.

Center the running belt

●Place treadmill on a level surface. Run Treadmill at approximately 3.5KM/H, checking the running condition.

If the belt has drifted to the left ,pull out of the safety clock and switch, turn the left adjusting bolt 1/4 turn clockwise ,then start running until centering the belt .PIC A

If the belt has drifted to the right, pull out of the save clock and switch, turn the right adjusting bolt 1/4 turn clockwise, then start running until centering the belt. PIC B

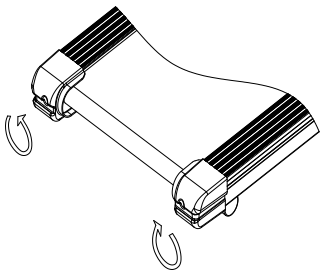

Picture A running belt to the left

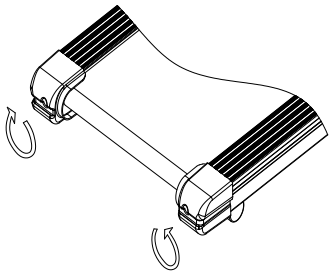

Picture B running belt to the Right

TROUBLE SHOOTING GUIDE

CODE	REASON	SOLUTION
Er1/Er7	1. the communication line is damaged or poor connection; 2. electronic watch or control board damage	1. check the upper and lower communication line connection is good or damaged; 2. replace the electronic form or control board
Er3	Over voltage	1. Restart the treadmill，check if it is normal 2. replace the control board
Er4	Over current	1. Restart the treadmill，check if it is normal 2. replace the control board
Er5	Over load	1. Restart the treadmill，check if it is normal 2. replace the control board
Er6	Motor is not properly connected	1. check if the connection of motor is normal； 2. replace the motor

App Installation

Scan the QR barcode to directly locate FitShow in the App Store on your device.

Note: In order to scan the QR Code,you must first download the QR READER App on your device. Available in both Apple Store & Google Play Store.

App Instructions

1. Creat a username and password

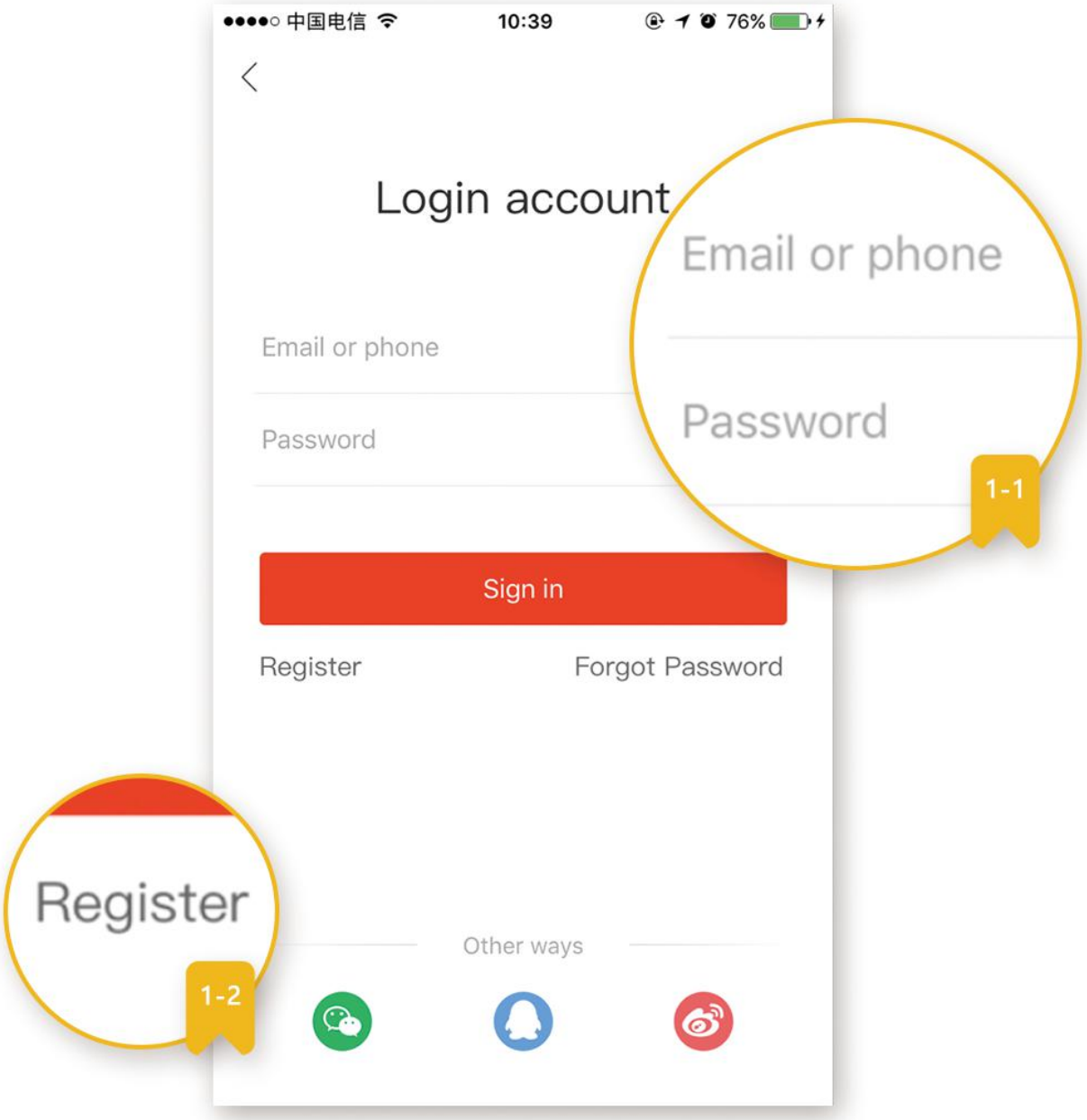

- 1-1. For first-time users, you must first register a user name and password to save your personal record. If you are registered, please enter your username and password.
- 1-2. Please use registered mail or mobile phone number, and then enter your account number and password registered sports show.

2. How to sync device

2.1 Search equipment

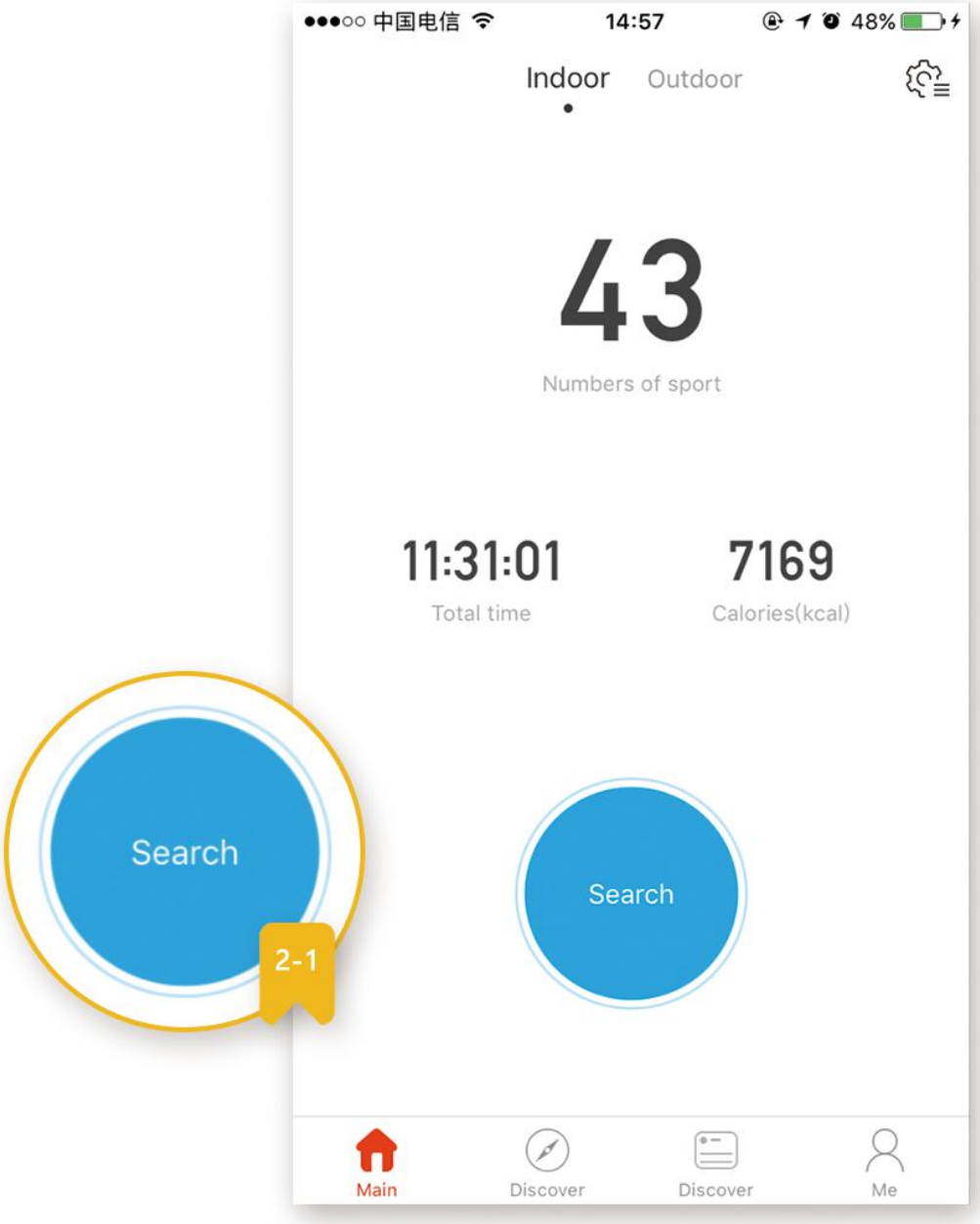

- 2-1. Open sports show APP please open your Bluetooth device. Click on the home page of the blue button search device for fitness equipment search.

2.2 Connecting equipment

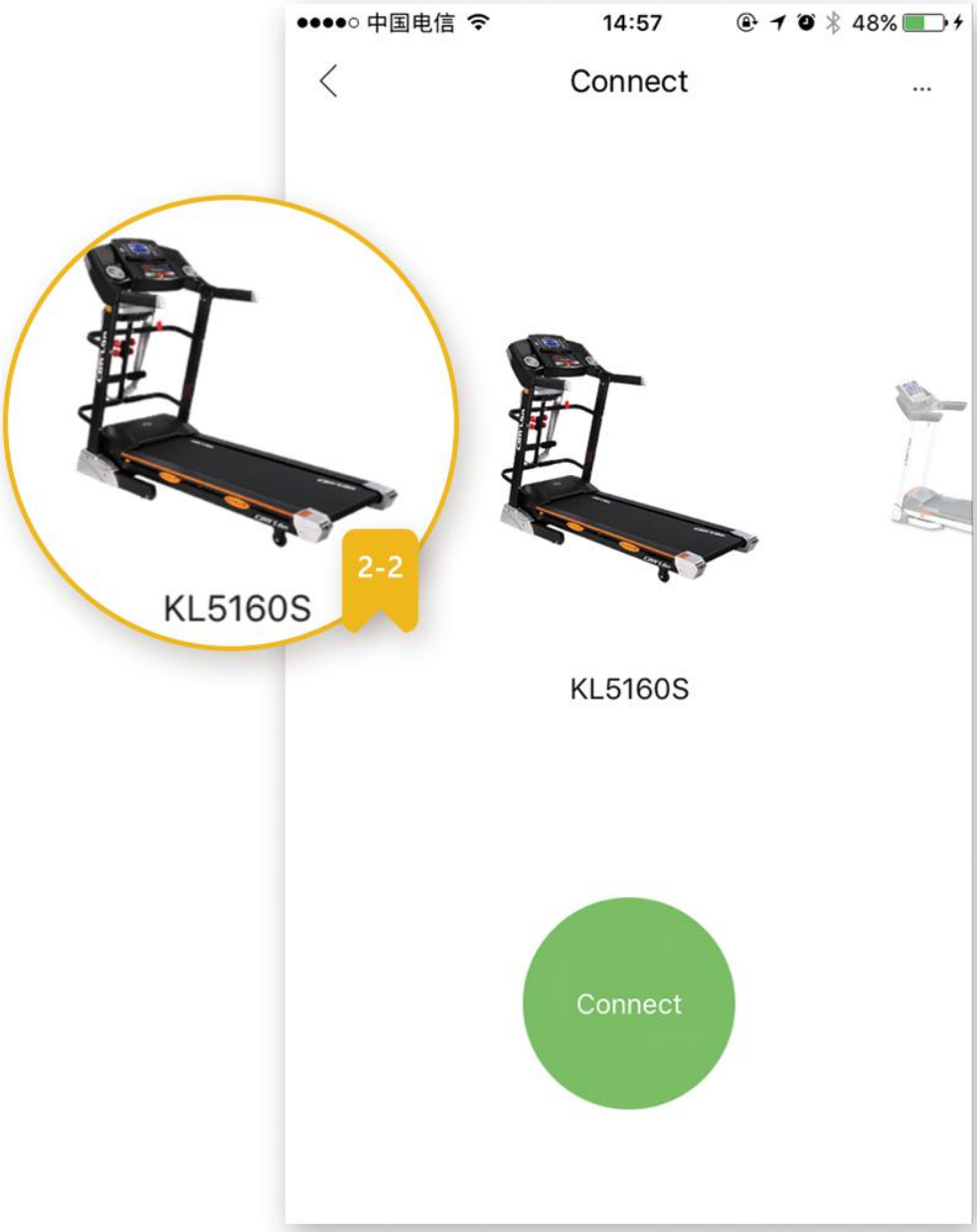

- 2-2. Bluetooth scanning is completed, sports show will automatically search your mobile phone near the sports equipment can be connected.

2.3 Connect successfully

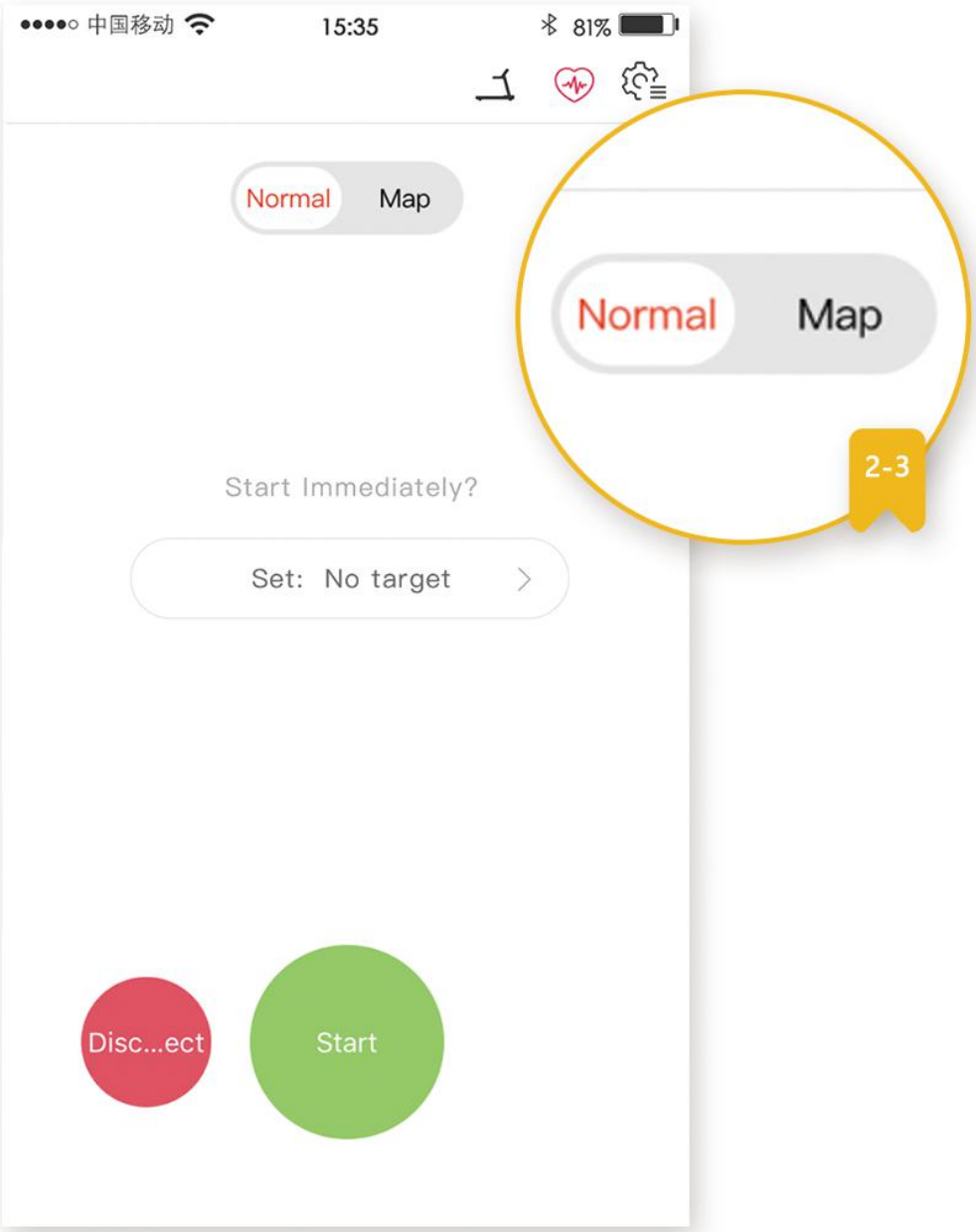

- 2-3. After a successful connection, can be selected according to the mode of exercise you need to.

3. **Operational Instructions**

3.1 Motion setting

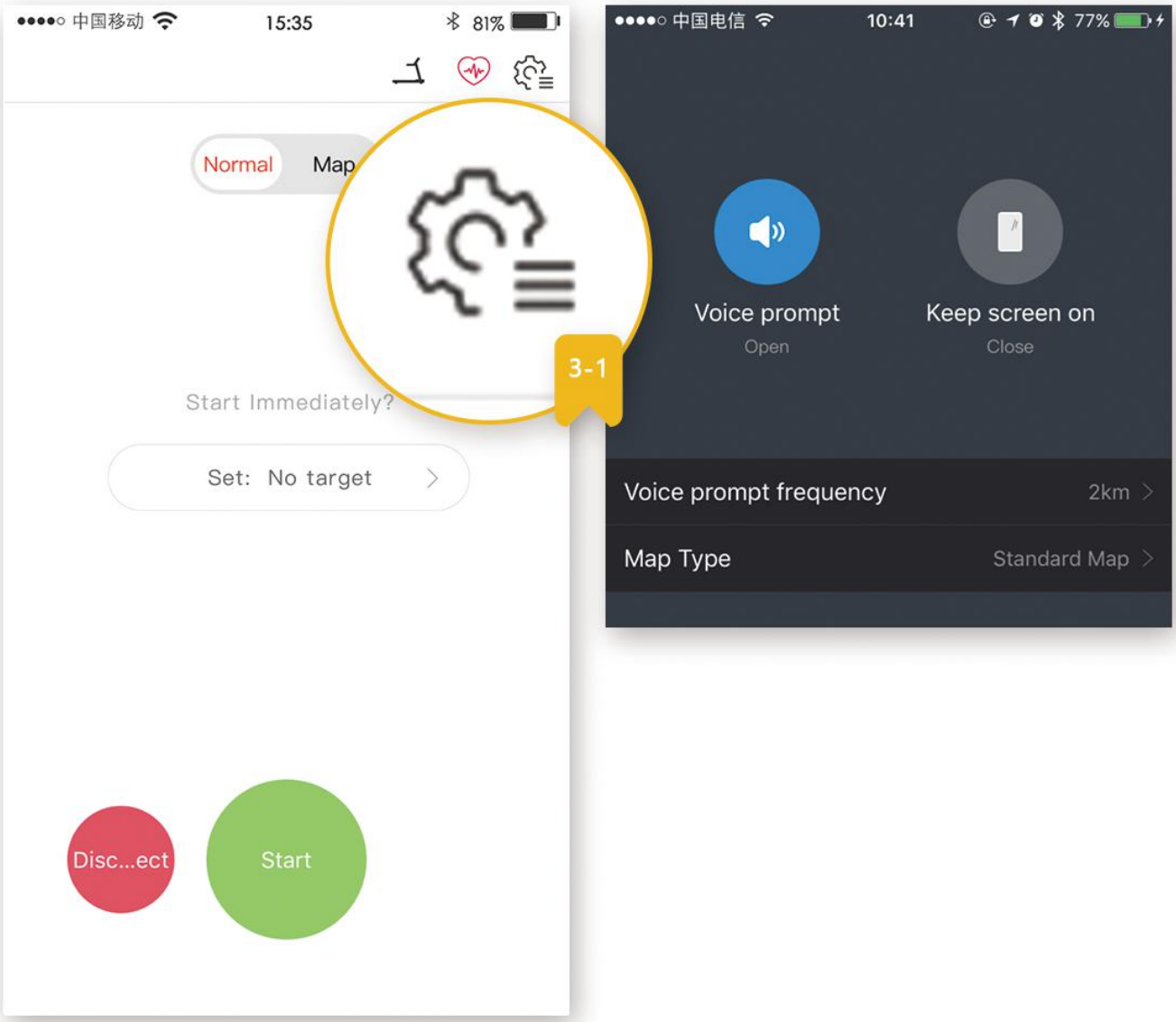

- 3-1. Change is set in motion in the home or about the movement of the interface on the upper right corner of the "Settings" button, set.
- The settings include "voice prompt", 'screen light', 'voice type', 'reminder frequency'.

3.2 Select mode

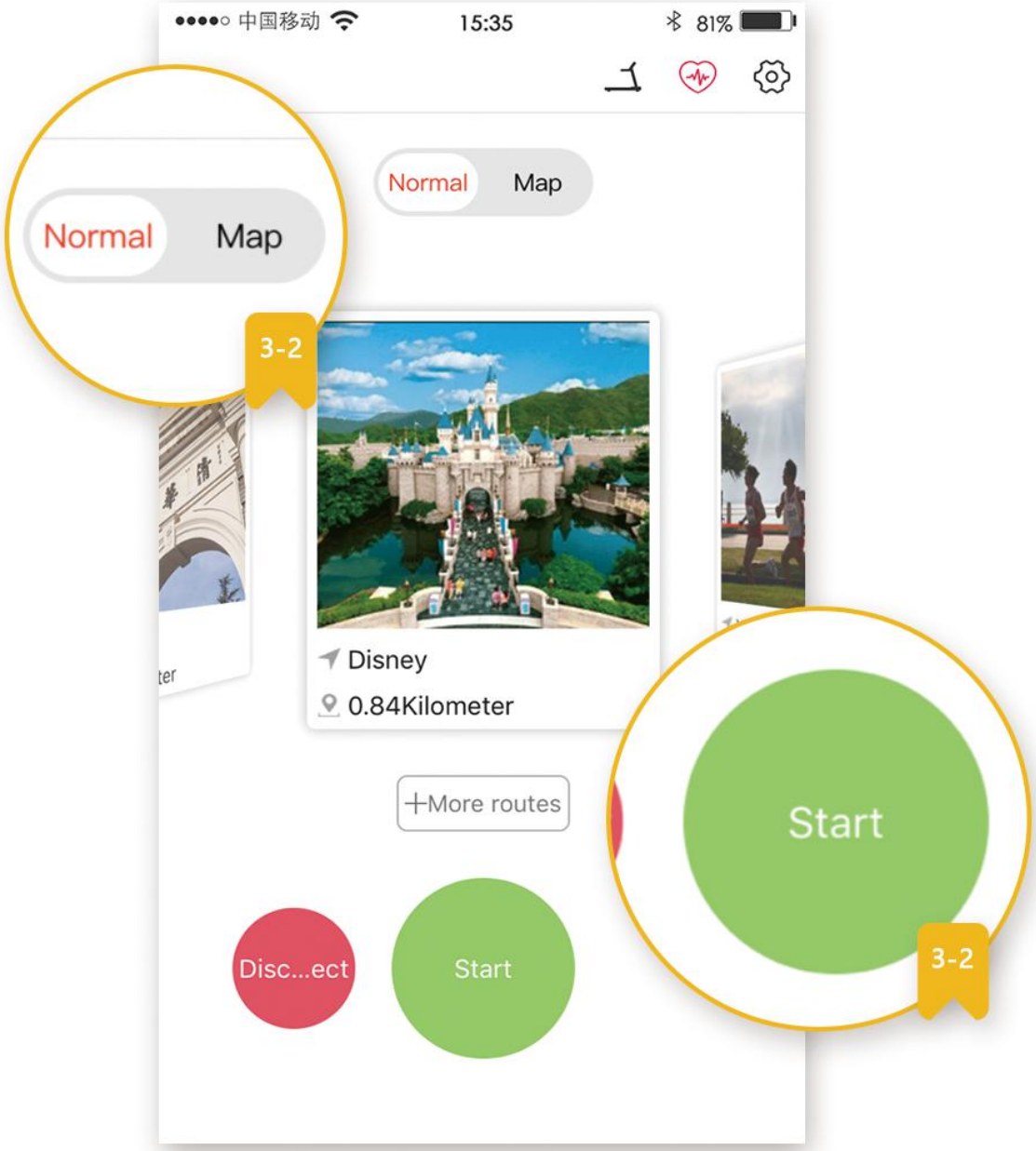

- 3-2. After connecting the device, the application will display two modes, you can choose any mode according to your needs, and then click the "start" button for movement.

3.3 Start exercis

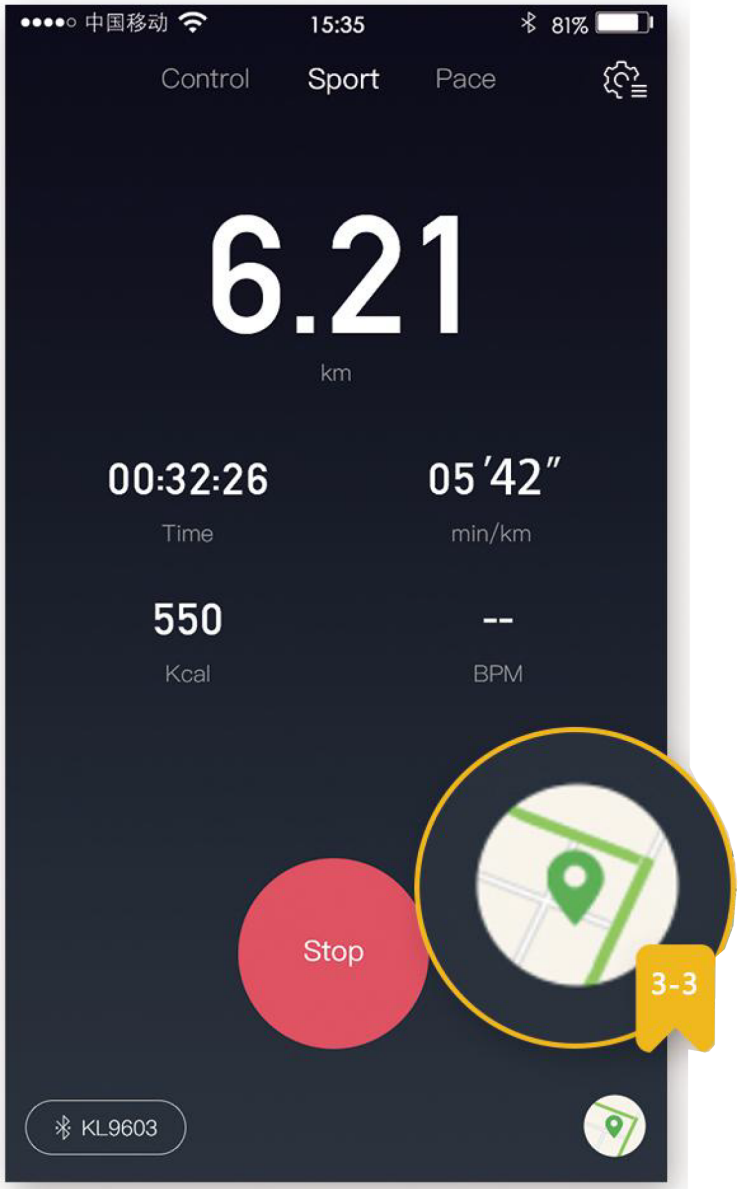

- When you start the exercise, the mileage in your exercise, when used, with speed, consumption, heart rate and other data will be displayed on your phone; you can click on the corresponding data, other data switching.
- If you are moving the map mode, click on the lower right corner of the motion map button, you can switch to the map mode interface, view your trajectory.
- Finish your movement when you press the stop button, the motion show will save the record in your record in the history of the movement.