xada.tech

XA2200
QUICK START GUIDE

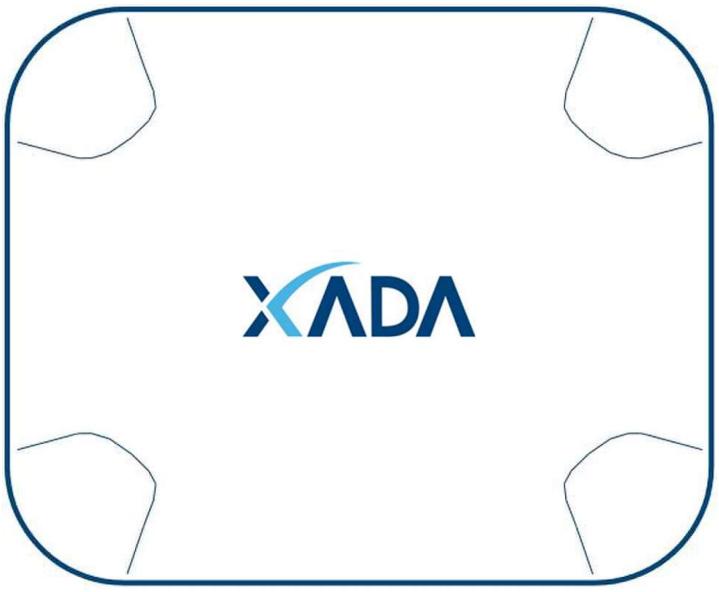

FCC ID:2AUII-XA2200
IC: 25460-XA2200

Revision History

Rev.	Issue Date	Revisions	Effect Page	Revised By
00	2019/10/30	Initial Issue	All	Tomasz
01	2020/02/14	Add Step 9 –for CAP setting and modified the description “country” code setting.	Page.7	Stanly Cheng

Device Setup

Step 1 - Connecting the Router

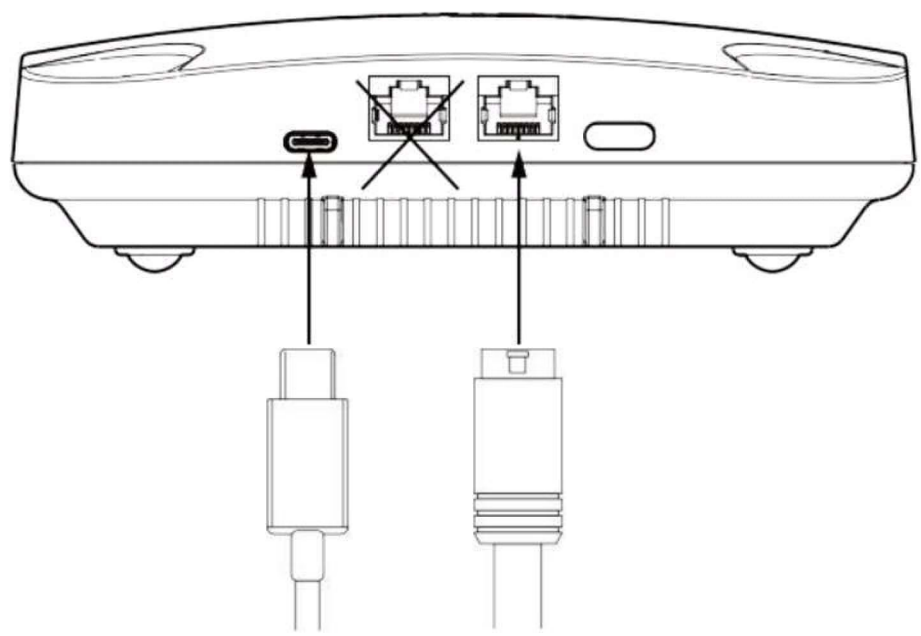

Connect to the power source (use only the included power adapter) and connect a LAN cable though the right connector directly to your computer, then go to the http://192.168.100.1 page.

Step 2- Login

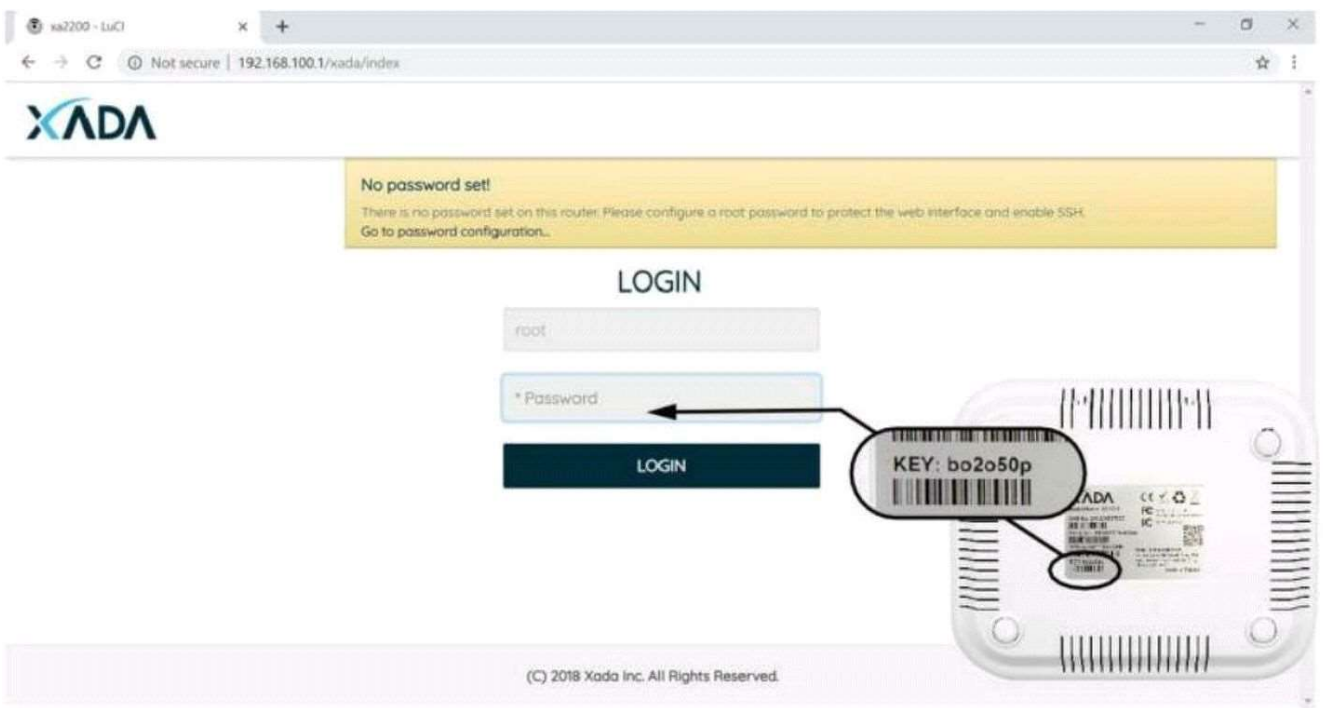

Locate the label on the bottom of your Xada device, type the KEY to log in to the product management interface.

Step 3- Password Configuration

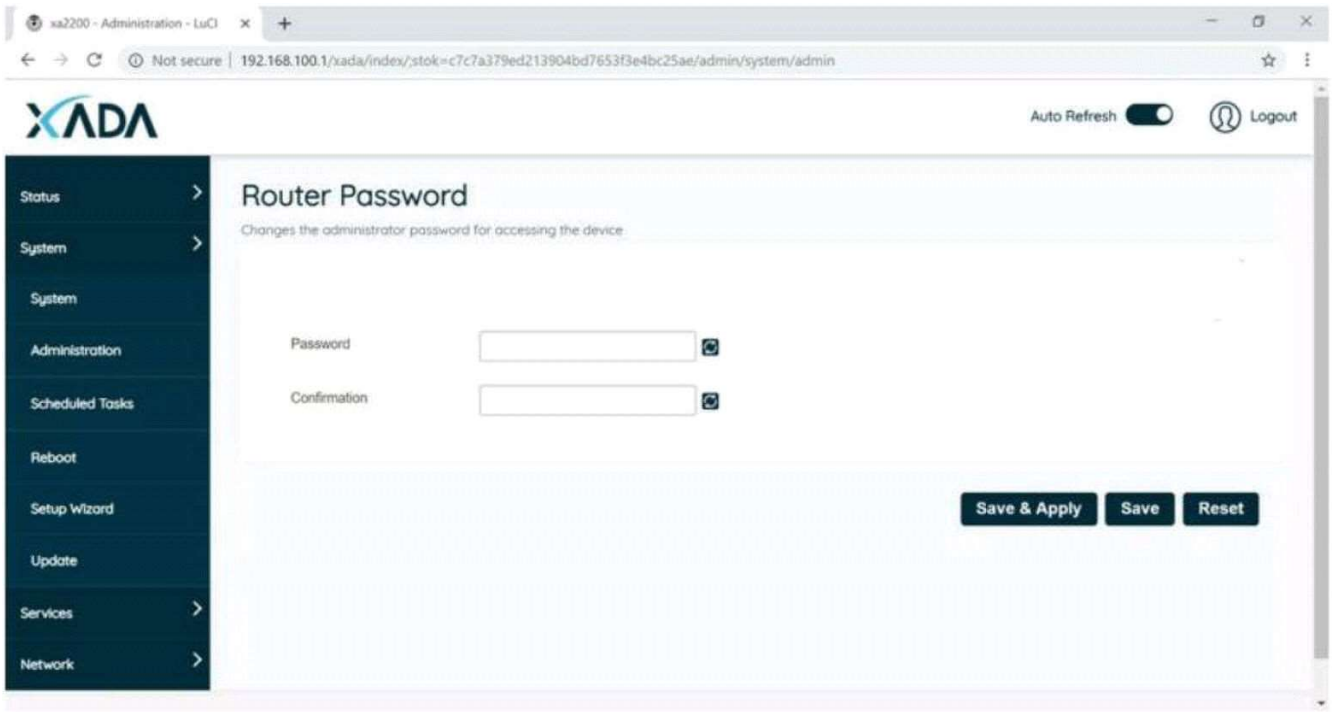

For future network management enter your secure password on every Xada unit.

Step 4 – Enter Setup Wizard

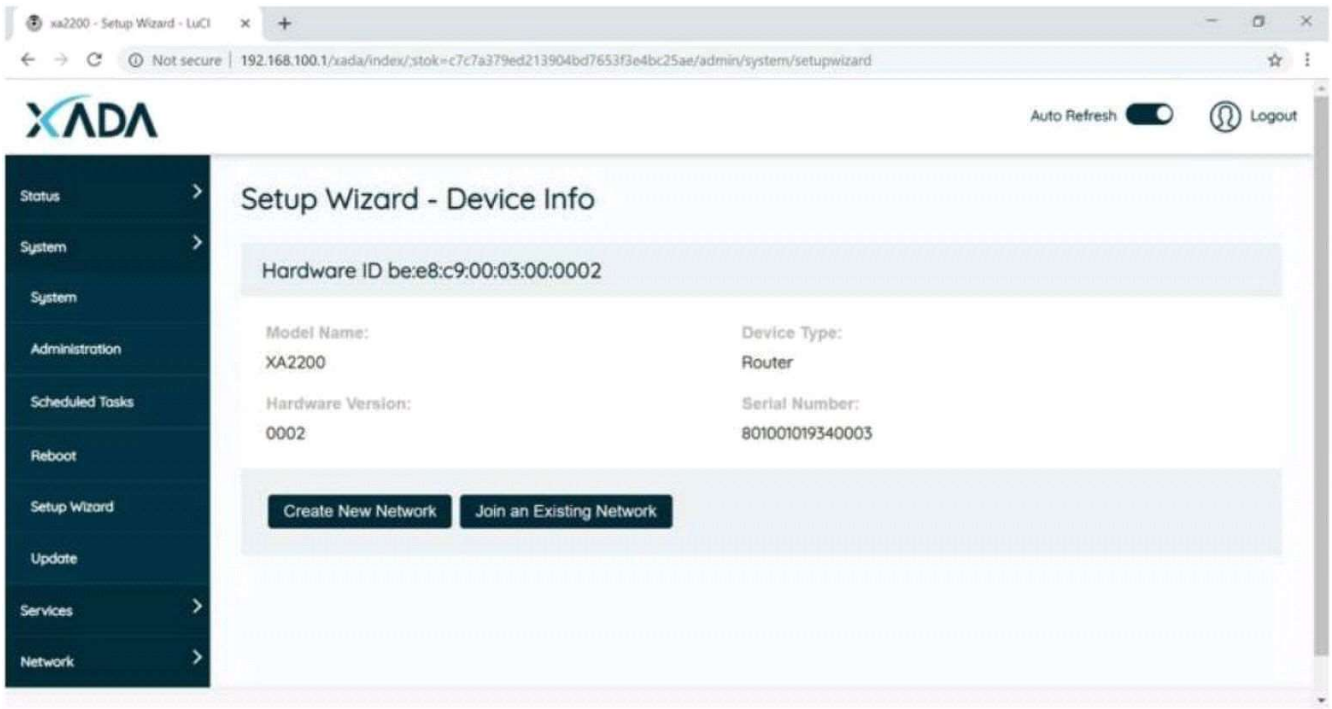

For your first Xada unit, select Create New Network, and go to Step 5.

For additional Xada unit(s) select Join an Existing Network and skip to Step 6.

Step 5 – Create New Network (FOR YOUR FIRST XADA UNIT)

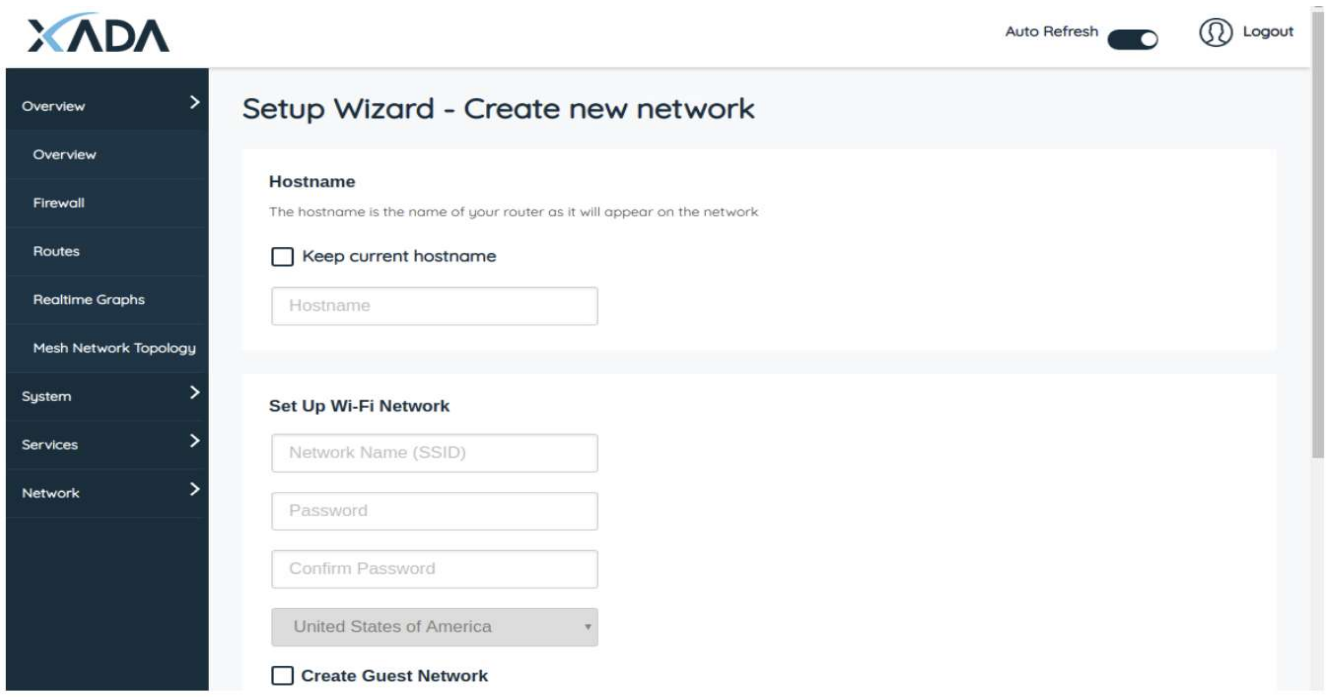

Type your desired wireless network name (SSID) and password.
P.S.: We will show the country "United States of America" or "Canada" as factory default setting when the product ship to the country accordingly.

Step 6 – Join an Existing Network (FOR ADDITIONAL XADA UNIT)

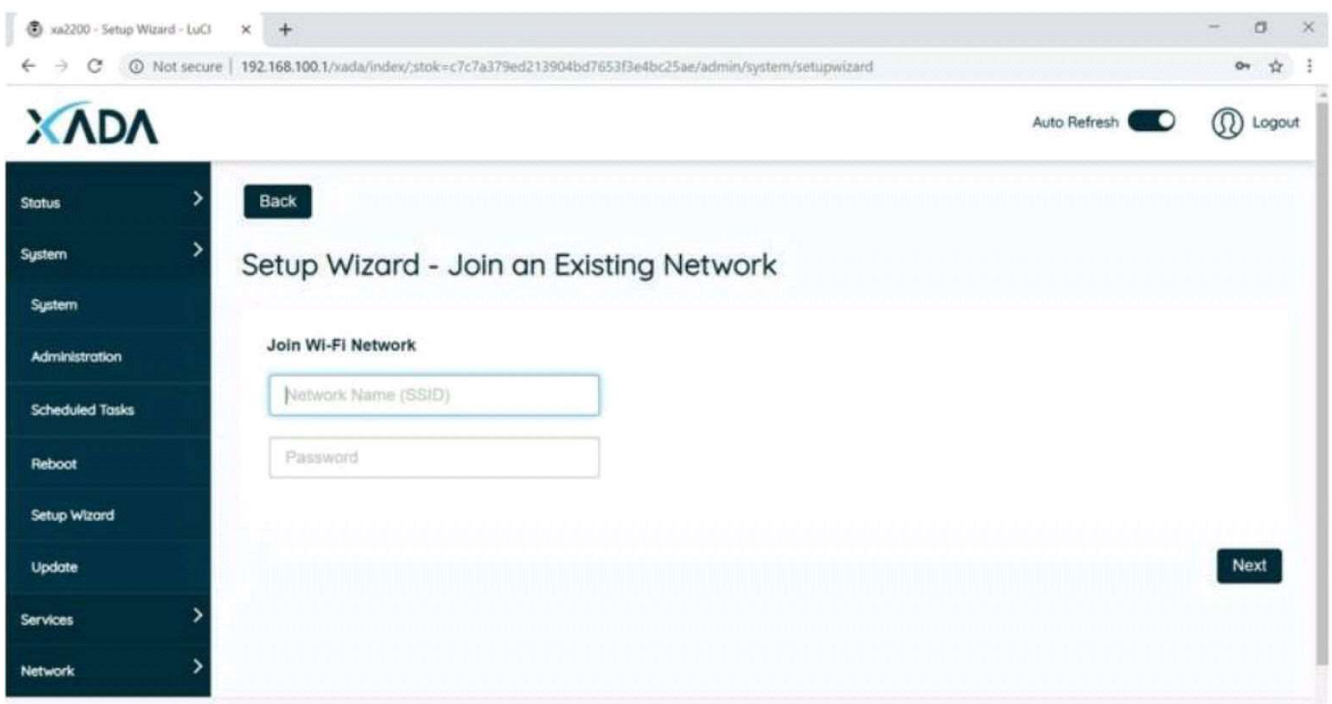

For additional Xada unit(s) please enter the identical network and password as your first Xada unit.

Step 7 – Network Connection Guide (FOR YOUR FIRST XADA UNIT)

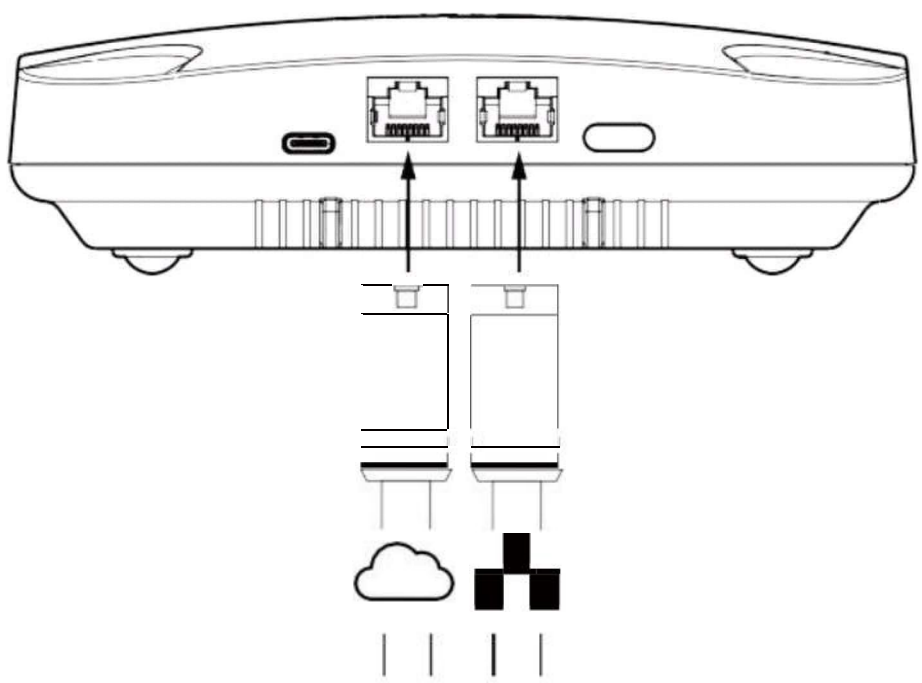

Yours main Xada unit must connnect the left connector to your internet gateway, and the right connect to our corporate LAN network.

Step 8–Network Connection Guid (FOR ADDITIONAL XADA UNIT)

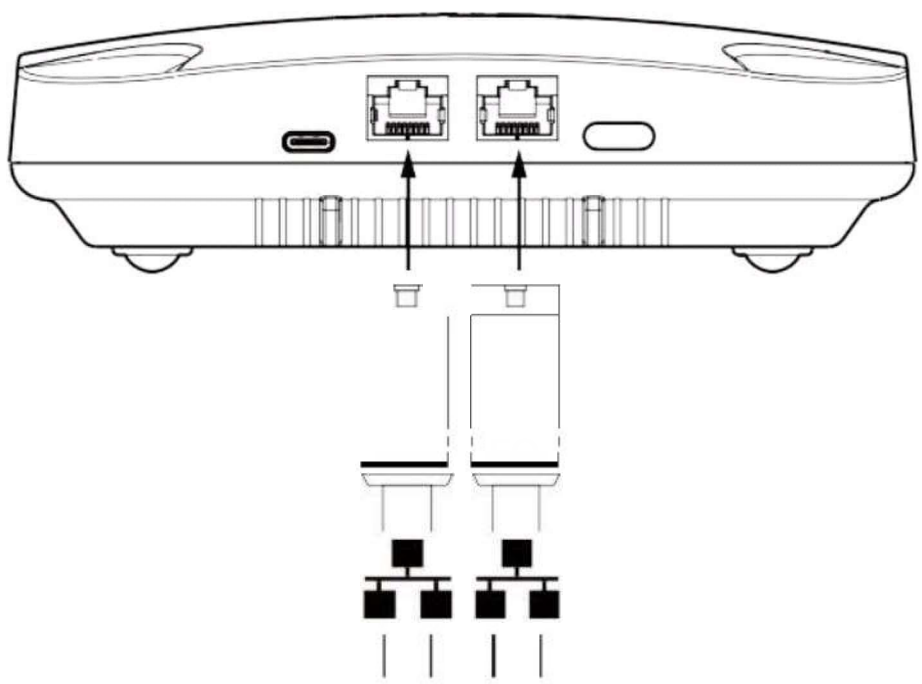

Your additional Xada units - please connect your corporate LAN network cable either to the left or to the right connector. Your additional units may also operate as wireless network expanders.

Step 9 –for CAP setting

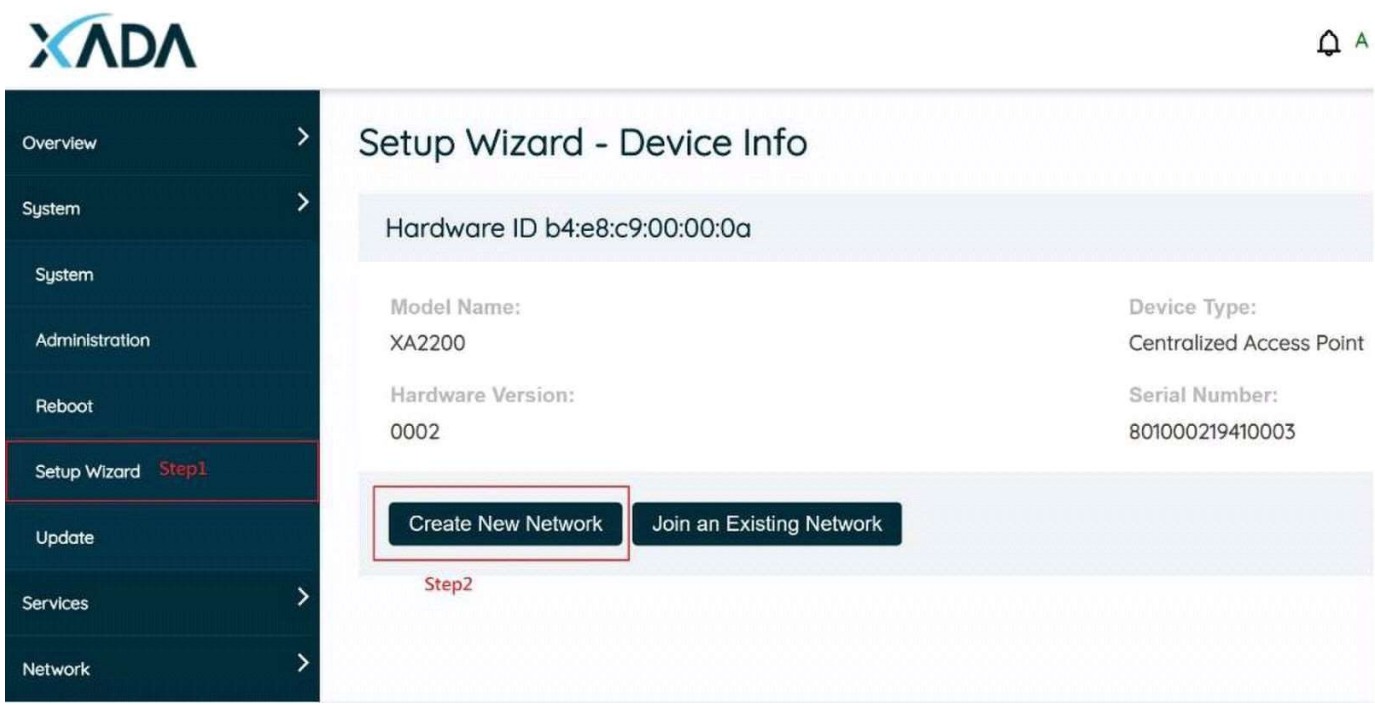

Step 1:

Select "Setup Wizard"

Setup 2:

Click "Create New Network".

Step 3:

- Host Name:
  The name of your device showing on Mesh Topology.
- Set Up Wi-Fi Network:
  Assign the name (SSID) to your Wi-Fi interface.
  Assign the password to your Wi-Fi interface.
- Set Up Your Operation Mode
  Select "Mesh Network"
  Set the Device IP Address for your DHCP server.
- Click "Next" Button.

Product Overview

Front view:

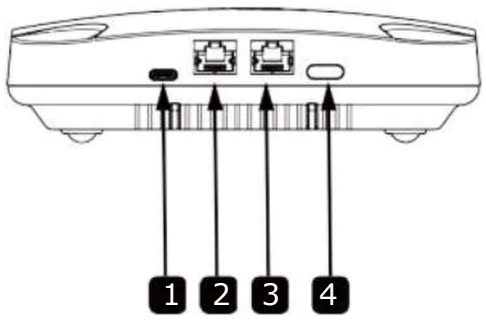

Top view:

No.	Description	No.	Description
1	Power Input connector	4	Reset button
2	LAN RJ45 connector	5	LED Light indicator
3	LAN RJ45 connector		

Regulatory Statements

FCC Radio Frequency Interference Warnings & Instructions

This device complies with part 15 of the FCC Rules. Operation is subject to the following two conditions: (1) This device may not cause harmful interference, and (2) this device must accept any interference received, including interference that may cause undesired operation.

No Unauthorized Modifications: Do not make any changes or modifications to this product without the prior express written approval of Xada Technologies Ltd. Any changes or modifications made without express written approval could void the user's authority to operate this product.

Note: This equipment has been tested and found to comply with the limits for a Class B digital device, pursuant to part 15 of the FCC Rules. These limits are designed to provide reasonable protection against harmful interference in a residential installation. This equipment generates uses and can radiate radio frequency energy and, if not installed and used in accordance with the instructions, may cause harmful interference to radio communications. However, there is no guarantee that interference will not
occur in a particular installation. If this equipment does cause harmful interference to radio or television reception, which can be determined by turning the equipment off and on, the user is encouraged to try to correct the interference by one or more of the following measures:
· Reorient or relocate the receiving antenna.
· Increase the separation between the equipment and receiver.
· Connect the equipment into an outlet on a circuit different from that to which the receiver is connected.
· Contact sales@xada.tech or an experienced radio/TV technician for help.

FCC Guidelines for Human Exposure

This equipment complies with FCC radiation exposure limits set forth for an uncontrolled environment. This equipment should be installed and operated with minimum distance of 20 cm between the radiator and your body.

FCC Information for User

This device does not contain any user serviceable components and is to be used with approved antennas only. Any product changes or modifica- tions will invalidate all applicable regulatory certifications and approvals.
This device and its antenna(s) must not be co- located or operated in conjunction with any other antenna or transmitter.
Any changes or modifications not expressly approved by the party responsible for compliance could void the user's authority to operate this equipment.
For product available in the USA market, only channel 1~ 11 can be operated. Selection of other channels is not possible.

This device is designed for Indoor Usage only.

Industry Canada

"This Class B digital apparatus complies with Canadian ICES -003" / "Cet appareil numérique de la classe B est conforme à la norme NMB- 003 du Canada"

"This device complies with Industry Canada license-exempt RSS standard(s). Operation is subject to the following two conditions: (1) this device may not cause interference and (2) this device must accept any interference, including interference that may cause undesired operation of the device" / " Le présent appareil est conforme aux CNR d'Industrie Canada applicables aux appareils radio exempts de licence. L'exploitation est autorisée aux deux conditions suivantes: (1) l'appareil ne doit pas produire de brouillage, et (2) l'utilisateur de l'appareil doit accepter tout brouil- lage radioélectrique subi, même si le brouillage est susceptible d'en compromettre le fonctionnement"

Industry Canada Radiation Exposure Statement

IMPORTANT NOTE: "This equipment complies with IC radiation exposure limits"/ "Cet équipement est conforme aux limites d'exposition aux rayonnements IC établies"

This device complies with Industry Canada license-exempt RSS standard(s). Operation is subject to the following two conditions: (1) this device may not cause interference, and (2) this device must accept any interference, including interference that may cause undesired operation of the device.
Le présent appareil conforme aux CNR d'Industrie Canada applicables aux appareils radio exempts de licence. L'exploitation est autorisée aux conditions suivantes: (1) l'appareil ne doit pas produire de brouillage, et (2) l'utilisateur de l'appareil doit accepter tout brouillage radioélectrique subi, même si le brouillage est susceptible d'en compromettre le fonctionnement.

The radio transmitter has been approved by Industry Canada to operate only with the antenna(s) supplied. Use of any other antenna(s) is strictly prohibited for use with this product.
L'émetteur radio a été approuve par Industrie Canada pour fonctionner uniquement avec l'antenne(s) fournie. L'utilisation de toute autre anten- ne(s) est strictement interdit d'utiliser ce produit.

This device is designed for Indoor Usage only.
Cet appareil est conçu pour une utilisation en intérieur uniquement.

(i) the device for operation in the band 5150–5250 MHz is only for indoor use to reduce the potential for harmful interference to co-channel mobile satellite systems; (For devices installed in vehicles point i. is not required.)
(ii) for devices with detachable antenna(s), the maximum antenna gain permitted for devices in the bands 5250-5350 MHz and 5470-5725 MHz shall be such that the equipment still complies with the e.i.r.p. limit;
(iii) for devices with detachable antenna(s) , the maximum antenna gain permitted for devices in the band 5725-5850 MHz shall be such that the equipment still complies with the e.i.r.p. limits specified for point- to-point and non-point-to- point operation as appropriate; and
(iv) where applicable, antenna type(s), antenna models(s), and worst-case tilt angle(s) necessary to remain compliant with the e.i.r.p. elevation mask requirement set forth in section 6.2.2.3 shall be clearly indicated.

Users should also be advised that high- power radars are allocated as primary users (i.e. priority users) of the bands 5250-5350 MHz and 5650-5850 MHz and that these radars could cause interference and/or damage to LE-LAN devices.

(i) l'appareil pour fonctionner dans la bande 5150-5250 MHz est réservé à une utilisation en intérieur afin de réduire les risques d'interférences nuisibles à la co-canal systèmes mobiles par satellite;
(ii) pour les appareils avec antenne (s) détachable, le gain d'antenne maximal autorisé pour les appareils dans les bandes 5250-5350 MHz et 5470-5725 MHz doit être telle que l'équipement satisfait encore la pire limite;
(iii) pour les appareils avec antenne (s) détachable, le gain d'antenne maximal autorisé pour les appareils dans la bande 5725-5850 MHz doit être telle que l'équipement satisfait encore la pire limites spécifiées pour le point-à- point et non point-à-point, le cas échéant; opération et
(iv) l'angle d'inclinaison du pire (s) nécessaire pour rester conforme à la pire exigence de masque d'élévation énoncées dans la section 6.2.2 (3) doit être clairement indiqué.

Devraient également être informés les utilisateurs que les radars à haute puissance sont désignés comme utilisateurs principaux (c.-à-utilisateurs prioritaires) des bandes 5250-5350 MHz et 5650-5850 MHz et que ces radars pourraient provoquer des interférences et / ou endommager les appareils LE-LAN.

mobile device
This equipment complies with ISED radiation exposure limits set forth for an uncontrolled environment. This equipment should be installed and operated with minimum distance 20cm between the radiator & your body.

appareil mobile
Cet équipement est conforme aux limites d'exposition au rayonnement ISED établies pour un environnement non contrôlé. Cet équipement doit être installé et utilisé à une distance minimale de 20 cm entre le radiateur et votre corps.

All Rights Reserved. No part of this document may be photocopied, reproduced, stored in a retrieval system, or transmitted, in any form or by any means whether, electronic, mechanical, or otherwise without the prior written permission of Xada Technologies Ltd.

No warranty of accuracy is given concerning the contents of the information contained in this publication. To the extent permitted by law no liability (including liability to any person by reason of negligence) will be accepted by Xada Technologies Ltd., its subsidiaries or employees for any direct or indirect loss or damage caused by omissions from or inaccuracies in this document.

Xada Technologies Ltd. reserves the right to change details in this publication without notice. Please download the most updated version at:
https: //xada.tech/

Mechanical Specifications	
Dimension	(L)135mm x (W)165mm x (H)46.5mm
Color	White
ID drawing	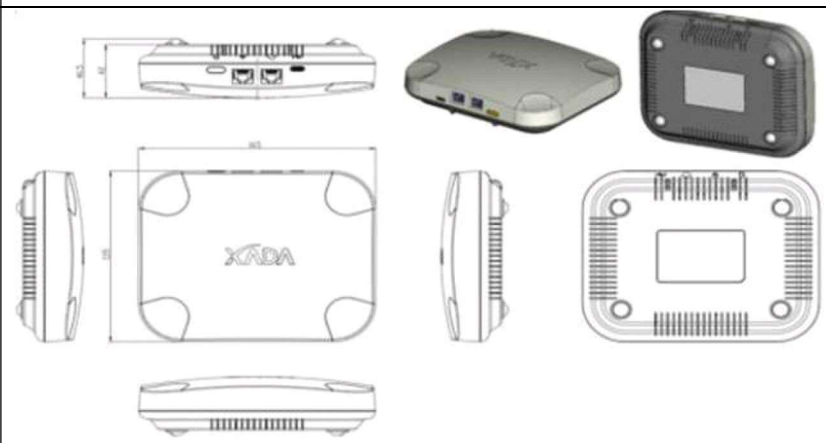
Wireless AP System Specifications	
PCBA Form Factor	Wireless AP Main Board 100mm x 125mm x 1.6mm
Chipset	Main board: Qualcomm IPQ4019 +QCA8072
Wi-Fi Standard	IEEE802.11a/b/g/n/ac
Wi-Fi Bands	2.4GHz, 5 GHz
Wi-Fi Features	MU-MIMO Qualcomm IoT Connectivity TxBF Wi-Fi SON
MIMO Configuration	2T x 2R
Storage	1x NoR Flash (16MB default) 1xNAND Flash(128MB) 1xeMMC(16GB)
DRAM	● 1x DDR3L (512MB)
Antenna	● 2.4GHz x2, 5GHz x4 (Additional 2 antennas are optional)
External I/O	Reset Button x1
	RJ45 x2 (LAN, WAN)
	USB Type-C x1

	RBG LED x3 (Wi-Fi, States, WAN)	
Internal I/O	● m-PCIe x1 (PCIe, USB2.0) + Nano SIM ● UART0 Debug console	
Power input	Input supply for host I/O: Type-C 9V⎓3A	
Environment Support	Operating Temperature	0~50 ℃
	Storage Temperature	0~50 ℃
	Humidity	10%~90%
Mini-PCIe Module		
Module	**Wi-Fi Module**	
Chipset	Qualcomm QCA9888	
Interface	Mini-PCIe (Full Size)	
Support Band	5GHz x2 high band	
Accessories		
AC / DC adapter	1. AC/DC adapter x1 ● Input Voltage: 100~240V (AC plug changeable，include US、EU、UK、China sku). ● Total Output Power: Over 27 W. ● Output Voltage: 5V / 9V ● Type C connector comply with PD definition. 2. USB type C to C cable 1.5m 3. RJ45 cable	

xada.tech

© 2019 Xada Technologies Ltd.
1F., No. 2, Ln. 150, Sec. 5, Xinyi Rd.,
Xiny District, 110 Taipei City, Taiwan
Phone: + 886-2-23451878
Web: https://xada.tech/