4. Push the foundation bolta into the holes with a hammer. Refer the image shown below:

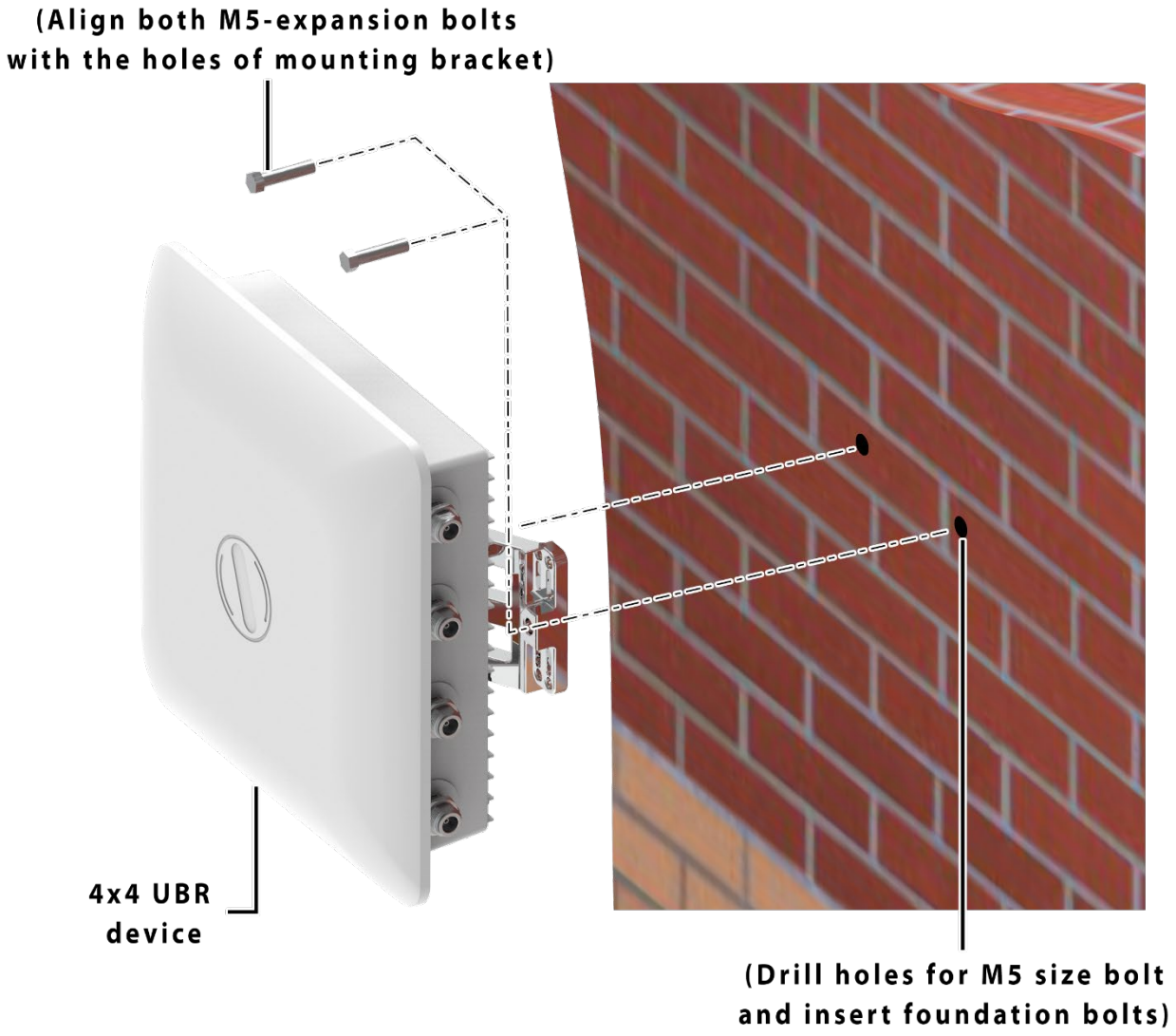

Figure 77: Hammer foundation bolts into the wall

5. Align the drilled holes with the holes of mounting bracket.

6. Insert M5-expansion bolts through the holes of mounting bracket into the foundation bolts as shown below:

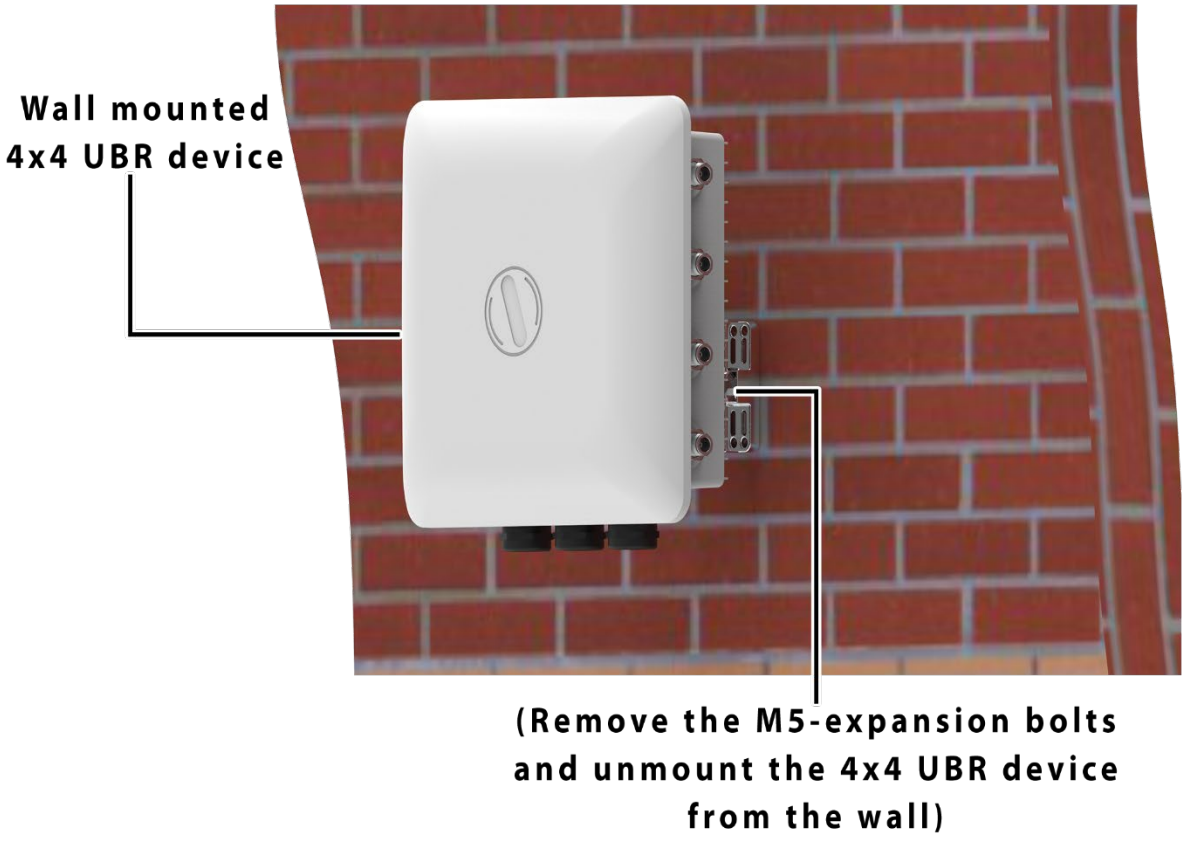

Figure 78: Holes through mounting adapter into the fischer plugs on wall

7. The UBR device is mounted on the wall.

17.3 Grounding of UBR

The UBR should be properly grounded upon installment. The IO's UBR has a grounding position at the back side of the device as shown below:

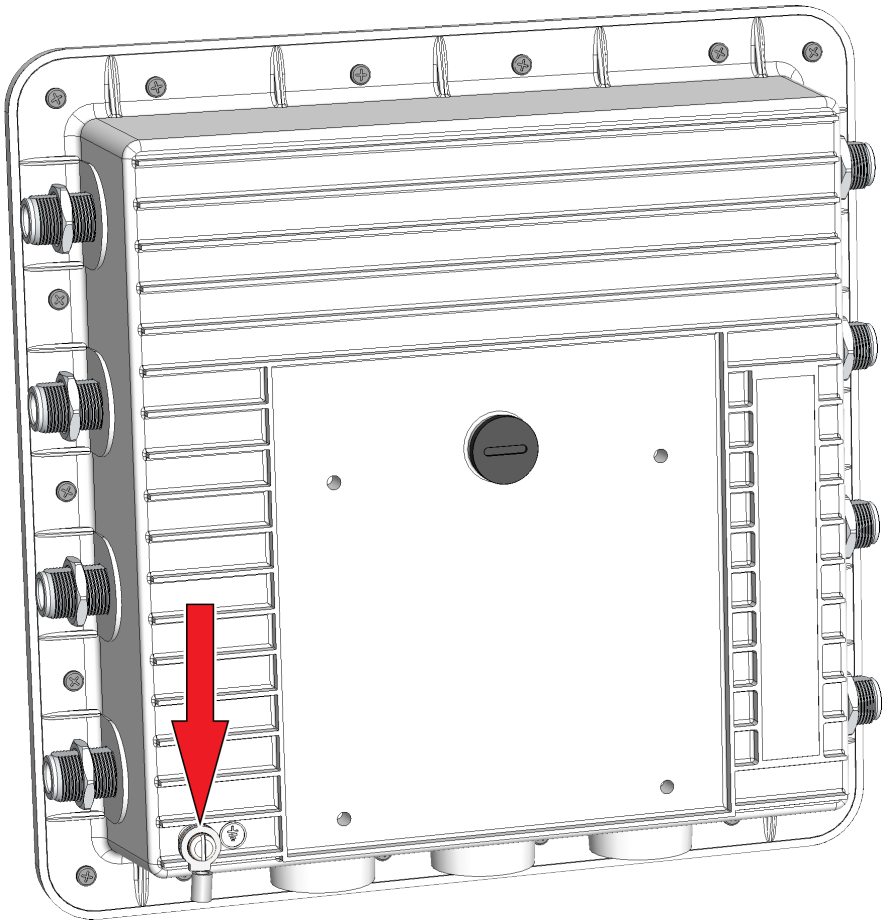

Figure 79: Grounding point of UBR

A grounding strap can be made from the ring lug terminal of M4 size and a medium length copper wire of suggested gauge AWG-6 (4.1 mm).

Insert the grounding wire and flush it till the end of the terminal. Use the crimp tool and reshape or compress the terminal. Use an M4x10 machine screw and attach the crimped lug with UBR.

18 Use Cases

A. Carrier Class Point-to-Multipoint Solution

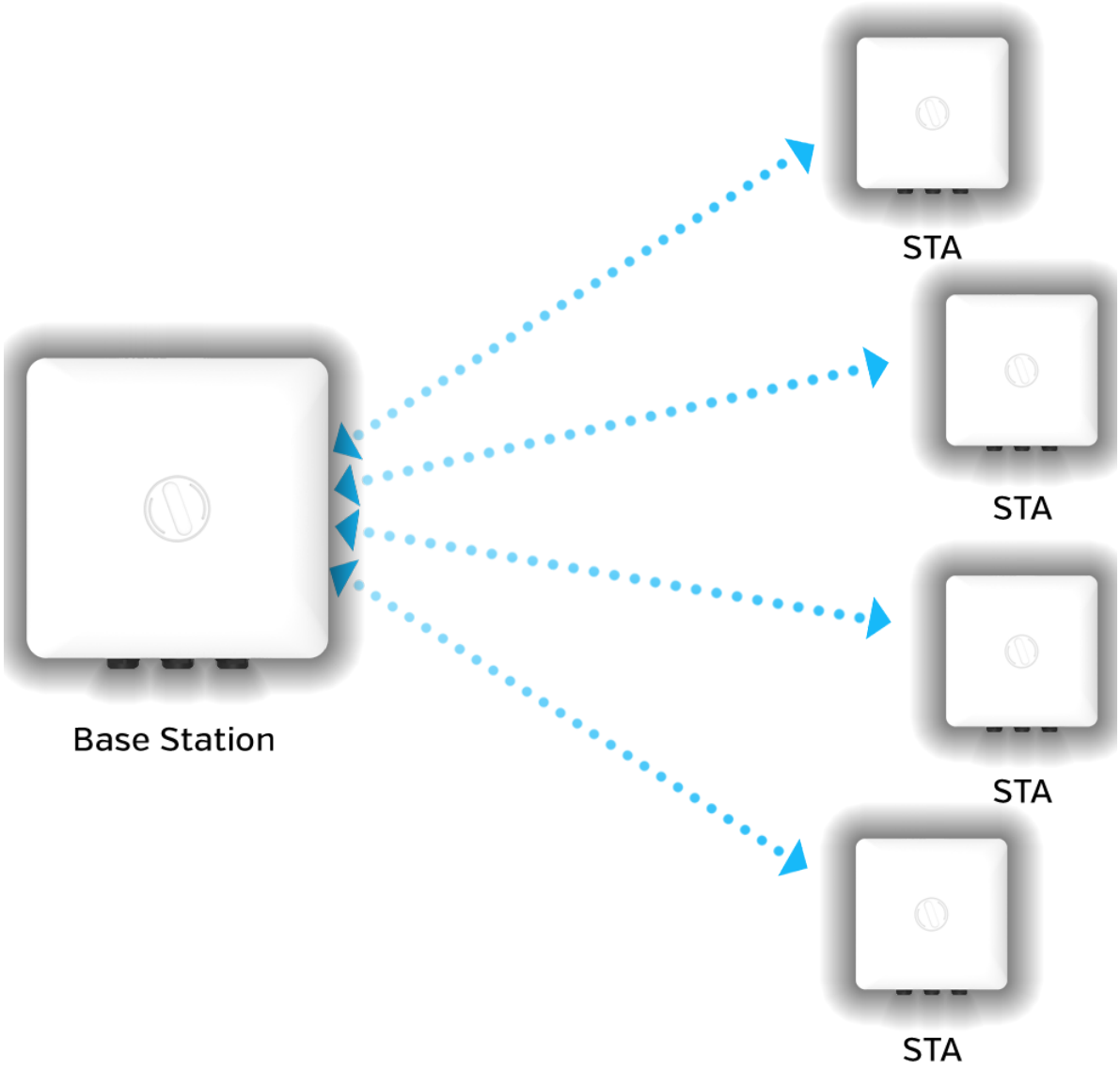

Figure 80: Use Case Diagram of Carrier Class Point-to-Multipoint Solution

B. Carrier Class Point-to-Point Solution

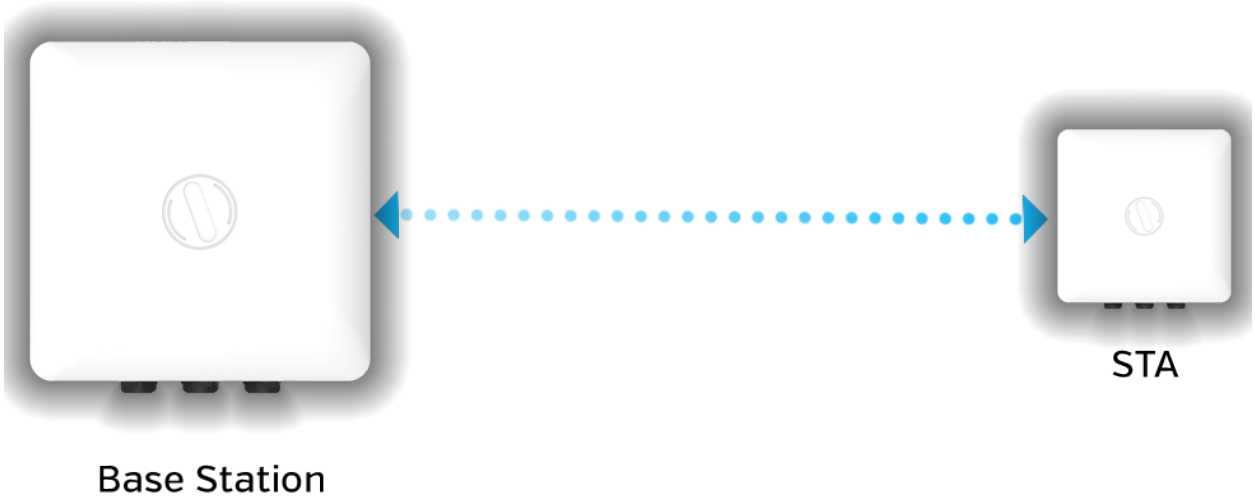

Figure 81: Use Case Diagram of Carrier Class Point-to-Point Solution