Model No.	EVJ-WN1_V1.0
Description	WIFI CAMERA MODULE with GC0308 image sensor
Customer Name	
Version	A1.0

Camera Module Technical Data Sheet

Supertek Part No.

EVJ-WN1_V1.0

Revision1.0

2019/07/02

Prepared By	Jingxu Xu	Date	2019/07/02
Checked By	David Liao	Date	2019/07/02
Approved By		Date	2019/07/02

Customer： _____

Customer Signature and Seal	**Data：**

Model No.	EVJ-WN1_V1.0
Description	WIFI CAMERA MODULE with GC0308 image sensor
Customer Name	
Version	A1.0

Revision History

Revision	Date	Prepared By	Description
A1.0	2019/07/02	Jingxu Xu	First Release

核准 Approved by		审核 Checked by		编制 Edited by	

Model No.	EVJ-WN1_V1.0
Description	WIFI CAMERA MODULE with GC0308 image sensor
Customer Name	
Version	A1.0

Contents

1. **WIFI Camera Specification**
2. **WIFI Chipset General Description**
   2.1 General Description
   2.2 Applications
   2.3 Features
   2.4 Key Specification
   2.5 Block Diagram
   2.6 Pin Connector Descriptions
   2.7 Schematic
3. **MCU Information**
   3.1 Outline
   3.2 Features
   3.3 Pin Definition
   3.3.1 Packages
   3.3.2 Pin Assignment
   3.3.3 Pin Description
4. **Schematic of WIFI chipset and MCU**
5. **USB Camera Information**
   5.1 Image sensor GC0308 General Desciption
   5.2 Image sensor GC0308 General
   5.3 Mechanical drawing of USB camera
6. **Drawing of SHWN8189WIFI Camera Module**
7. **Environmental and Reliability Specification**
8. **Packaging Information**
   8.1 The default label contents
   8.2 Packing SPEC
9. **Precaution**
   9.1 Storage and operating conditions
   9.2 Transportation and Handling

1. WIFI Camera Specification:

SPECIFICATION	
Main material	Sensor: GC0308, USB chip: SPCA2072A MCU: AX3268-UM-001, WIFI chip: BL-M8189FS3
Resolution	VGA(640*480) DSP SPCA2072A can only support VGA
Gray scale	Color
Frame rate	30fps
Power	USB connector (battery for option as well)
Light Indicator	Controlled by MCU, the setting way can be met by your requirement
Data save	On the smart device
SSID name	SSID can change, manually connect to WIFI camera
SDK	Different SDK for Iphone, Andriod and Windows
Working mode-AP	WIFI camera will give out the hotspot for the smart device to connect
WIFI camera size	Same as your size: 49.6*35mm

2. WIFI CHIPSET INFORMATION;

2.1 General Description

BL-M8189FS3 wireless SDIO module is designed base on RTL8189FTV . It operates at 2.4~2.4835GHz and supports IEEE802.11b/g/n 1T1R , wireless data rate can reach up to 150Mbps.The SDIO interface complies with SDIO 1.1/2.0/3.0 . It supports external antenna, which adapts different kinds of work environment. It's easy and convenient to connect wireless network

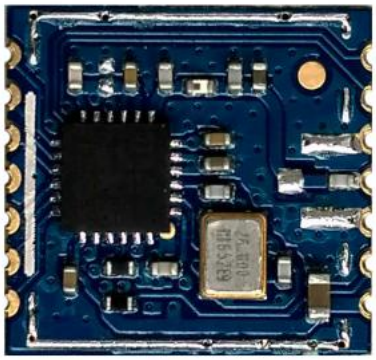

Figure 1 Top View

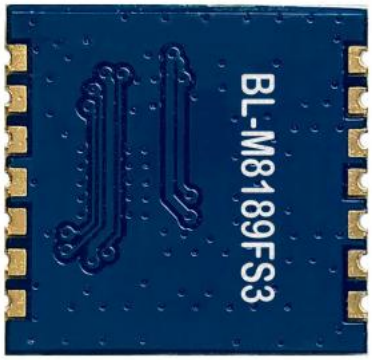

Figure 2 Bottom View

2.2 Applications

- MID
- IP Camera
- STB
- Smart TV
- E-book
- Other devices which need to be supported by wireless network

2.3 Features

- Operating Frequencies : 2.4~2.4835GHz
- Host Interface is SDIO, complies with SDIO 1.1/2.0/3.0
- IEEE Standards : IEEE 802.11b/g/n
- Wireless data rate can reach up to 150Mbps
- External antenna optional
- Power Supply:3.3V±0.2V

2.4 Key Specification

Item	Description
Product Name	BL-M8189FS3
Main Chip	RTL8189FTV
Host Interface	SDIO 1.1/ 2.0/ 3.0
IEEE Standards	IEEE 802.11b/g/n
Operating Frequencies	2.4~2.4835GHz,
Modulation	802.11b: CCK, DQPSK, DBPSK 802.11g: 64-QAM,16-QAM, QPSK, BPSK 802.11n: 64-QAM,16-QAM, QPSK, BPSK
Working Mode	Infrastructure, Ad-Hoc
Wireless Data Rate	802.11b: 1, 2 ,5.5,11Mbps, 802.11g: 6,9,12,18,24,36,48,54Mbps, 802.11n: MCS0~7，HT20 reach up to72.2Mbps, HT40 reach up to150Mbps
Rx Sensitivity	-95dBm (Min)
TX Power	19.5dBm (Max)
Antenna Type	Connect to the external antenna through the half hole
Dimension(L*W*H)	13x 13.5x1.5mm (WxLxH) Tolerance:+/-0.15mm
Clock Source	26MHz
Working Temperature	-10° C to +50° C
Storage Temperature	-40° C to +70° C

2.5 Block Diagram

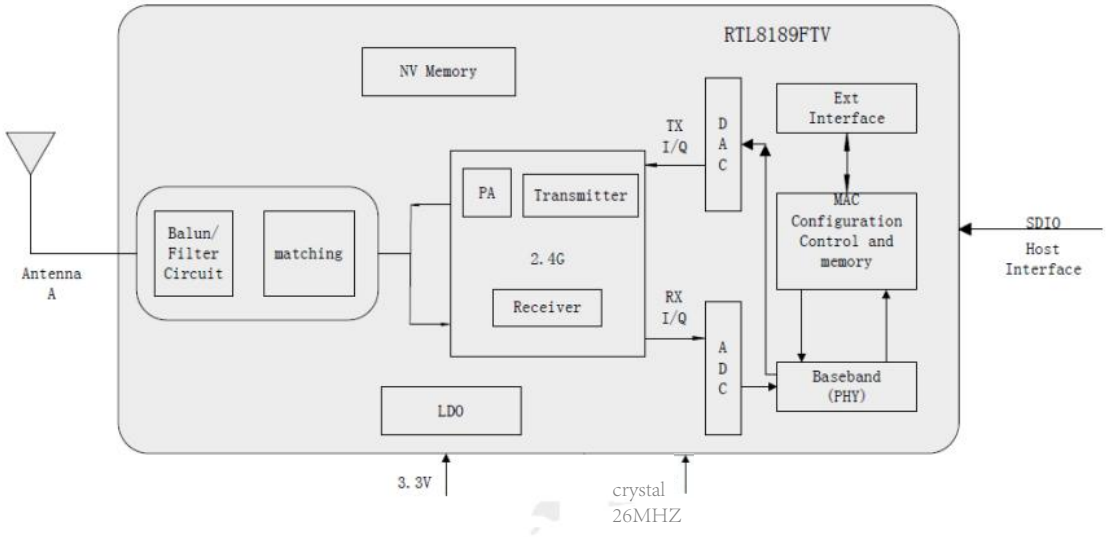

Figure 3 BL-M8189FS3 block diagram

2.6 Pin Connector Descriptions:

4. Pin Assignments

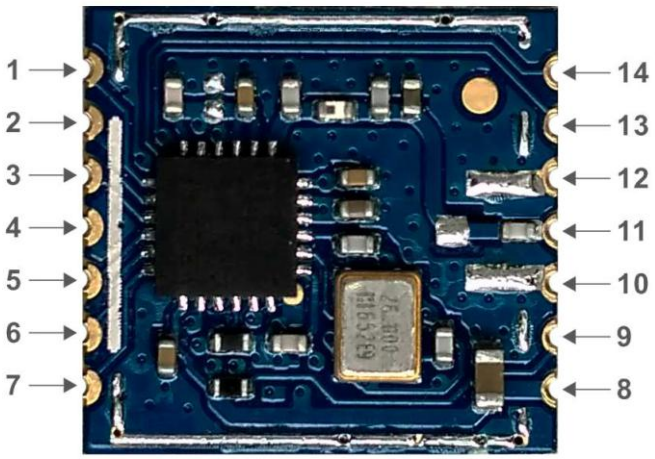

Figure 4 BL-M8189FS3 TOP View

PIN	Function	Type	Description
1	SD _2	I/O	SDIO data 2
2	SD _3	I/O ; I	SDIO data 3/ GSPI chip select
3	SD _CMD	I/O ; I	SDIO command/ GSPI data input
4	GND	G	Ground
5	SD _CLK	I; I	SDIO clock/ GSPI clock input
6	SD _D0	I/O ; O	SDIO data 0/ GSPI data output
7	SD _D1	I/O	SDIO data 1
8	+3.3V	P	3.3V power supply
9	PDn	P	Power down (active low)
10	GND	G	Ground
11	ANT_RF	I/O	WLAN RF pad
12	GND	G	Ground
13	WK_IN	I	Wake/Suspend input control / NC
14	WK_OUT	O	Wake/Suspend output control / NC

2.7 Schematic

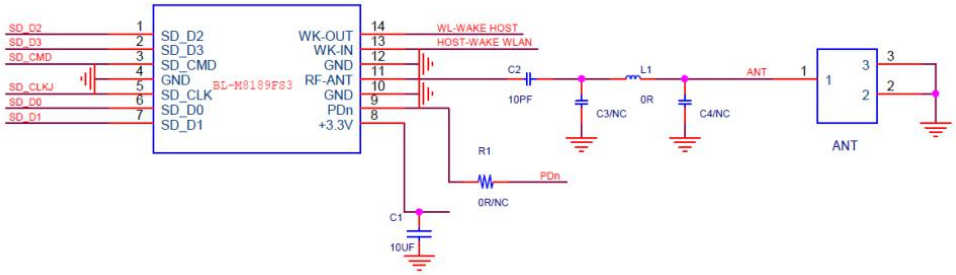

Figure 5

3. MCU INFORMATION

3.1 Outline

AX3268 is a 32 bit RISC microcontroller. This product is designed to provide VGA/720P JPEG CODEC applications with cost-effective, low-power, and high-performance microcontroller solution in a small die size.

By providing a complete set of common system peripherals, AX3268 minimizes overall system costs and eliminates the need to configure additional components.

It integrates advanced digital and analog peripherals to multimedia player applications.

3.2 Features

- High performance 32bit CPU, Maximum 120MHz operating frequency;
- 8K Bytes I-Cache and 8K Bytes D-Cache;
- Embody 8MByte SDRAM;
- JPEG encode & decode up to 60fps at VGA, 30fps at 720p;
- Supports cmos sensor 8bit data interface ; Support and YCbCr422;
- Support motion detection; VDE adjust;
- LCD driver interface; Support 8bit serial RGB LCD screen and 8bit CPU EMI LCD screen;
- Display process unit; Post-scaler supports any scale up or down; OSD1/OSD2/OSD3/ Video layers; OSD1/2/3 supports 256 colors;
- Two SD Host controller;
- Two SPI;
- Two UART;
- I2C;
- Four Timers;
- Watch dog;
- USB2.0 HS/FS Device and Host;
- Multiple power LDOs;
- Multiple PLL for user;
- SARADC for general purpose, such as ADKEY, battery detect;
- Mono MIC with AGC, Record;
- Build in high performance audio DAC with Class AB output.;
- support two oscillator at the same time, 32K and 12M;
- Build in 2M RCOSC;
- Support Real time clock;

3.3 Pin Definition

3.3.1 Packages

LQFP48

3.3.2 Pin Assignment

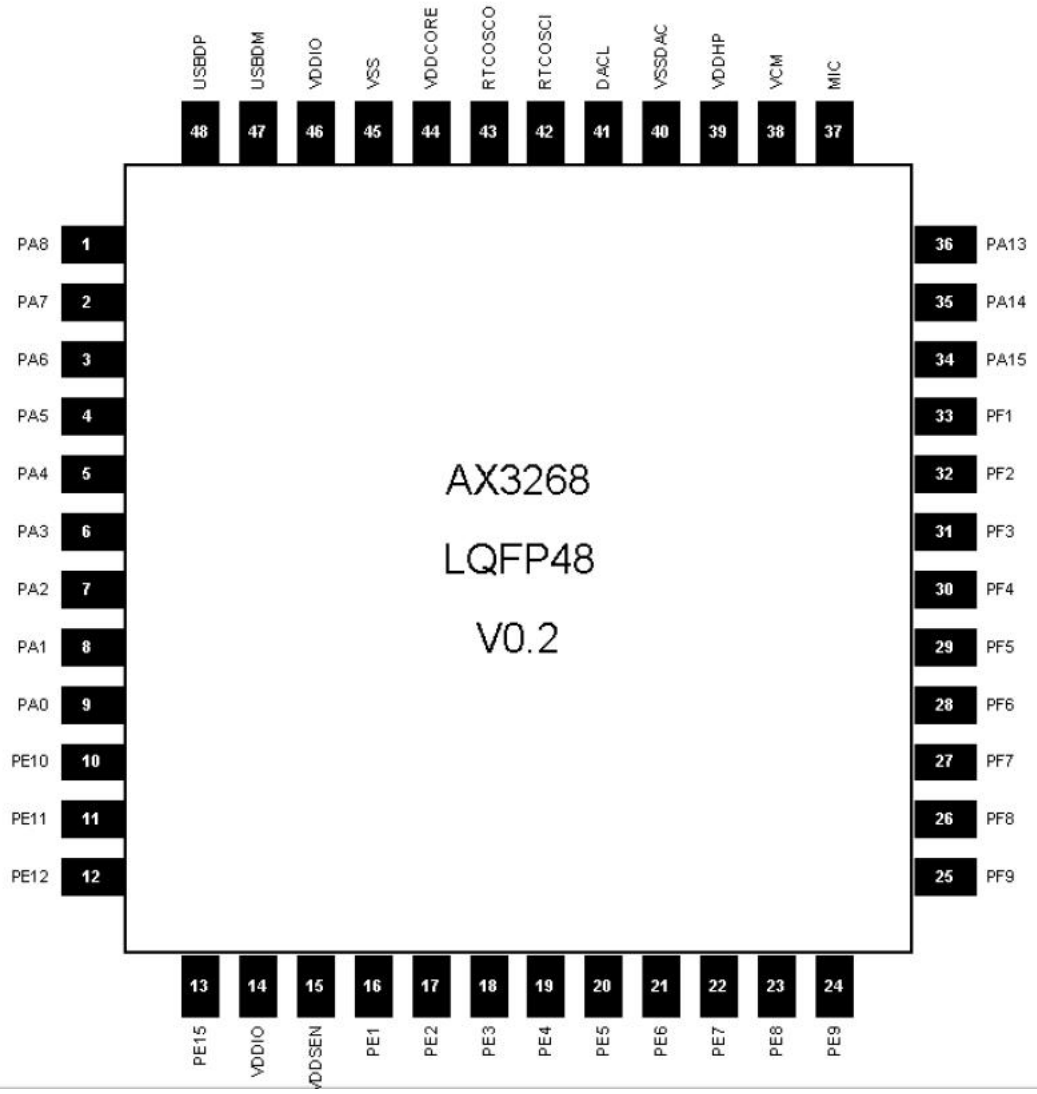

3.3.3 Pin Description

Table 2-1 LQFP48 pin description

Pin No.LQFP48	Name	Type	Function
1	PA8	I/O	IIC SDA G2 UART0 RX G1
2	PA7	I/O	ADC3 SPI1_DI G0

Pin No.LQFP48	Name	Type	Function
			SD0_CMD UART0_TX G2
3	PA6	I/O	ADC4 SPI1_CLK G0 SD0_CLK
4	PA5	I/O	SD0_DAT3
5	PA4	I/O	SPI1_DO G0/DI_2w G0 SD0_DAT0 UART0_RX G2
6	PA3	I/O	SD0_DAT1 PINT1
7	PA2	I/O	SD0_DAT2
8	PA1	I/O	ADC5 CSI_MCLK G0 BTUART_RX G0
9	PA0	I/O	ADC6 BTUART_TX G0 T3PWM G0
10	PE10	I/O	I2C_SCL T0PWM
11	PE11	I/O	ADC7 IR G2 PINT5 G0 T1PWM/T2CAP/T2INC
12	PE12	I/O	ADC8 T2PWM
13	PE15	I/O	I2C_SDA G1 BTUART_TX G1
14	VDDIO	PWR	VDDIO 3.3V LDO output
15	VDDSEN	PWR	Sensor 3.0V LDO output
16	PE1	I/O	CSI_D0 CSI_D2
17	PE2	I/O	CSI_D1
18	PE3	I/O	CSI_D2 CSI_D3
19	PE4	I/O	CSI_D3 CSI_D0
20	PE5	I/O	CSI_D4
21	PE6	I/O	CSI_D5 CSI_PCLK
22	PE7	I/O	CSI_D6 CSI_D5
23	PE8	I/O	CSI_HSYNC CSI_D6
24	PE9	I/O	CSI_PCLK CSI_MCLK G1
25	PF9	I/O	LCDD4 LCDD7 CSI_D7 SPI1_CLK G1
26	PF8	I/O	LCDD3 LCDD6 CSI_HSYNC SPI1_DO G1/DI_2w G1
27	PF7	I/O	LCDD2 LCDD5 CSI_VSYNC SPI_PING_DATO G0
28	PF6	I/O	LCDD1

Pin No.LQFP48	Name	Type	Function
			LCDD4 SPI_PING_CLK G0 SD1_DAT2
29	PF5	I/O	LCDD0 LCDD3 SPI_PING_CS G0 SD1_DAT3
30	PF4	I/O	LCDDE LCDD2 SPI_PING_DATO G1 SD1_CMD
31	PF3	I/O	LCDHSYNC/LCDRS LED2/LCDD1 SPI_PING_CLK G1 SD1_CLK
32	PF2	I/O	LCDVSYNC/LCDCS LCDD0 SPI_PING_CS G1 SD1_DAT0
33	PF1	I/O	LCDCLK/LCDWR LCDVSYNC/LCDCS SPI_PING_DATI SD1_DAT1 PINT2
34	PA15	I/O	LCDHSYNC/LCDRS SPI0_D1 G0/SPI0_DI G0
35	PA14	I/O	SPI0_D0/SPI0_DO/DI I2C_SDA G0
36	PA13	I/O	SPI0_CLK
37	MICI	AI	MIC input
38	VCM	AO	VCM output
39	VDDHP	PWR	Header phone POWER
40	VSSADC	GND	Analog GND
41	DACL	AO	DACL Output
42	IRTCOSCI	AI	32K OSC input
43	IRTCOSCO	AO	32K OSC output
44	VDDCORE	PWR	VDDCORE LDO output
45	VSS	GND	GND
6	VDDIO	PWR	USB VDD
47	USBDM	AIO	USB2.0 DM
48	USBDP	AIO	USB2.0 DP

Note: PIN46 is the same as PIN52, PIN46 can be floating.

4. Schematic of WIFI chipset and MCU:

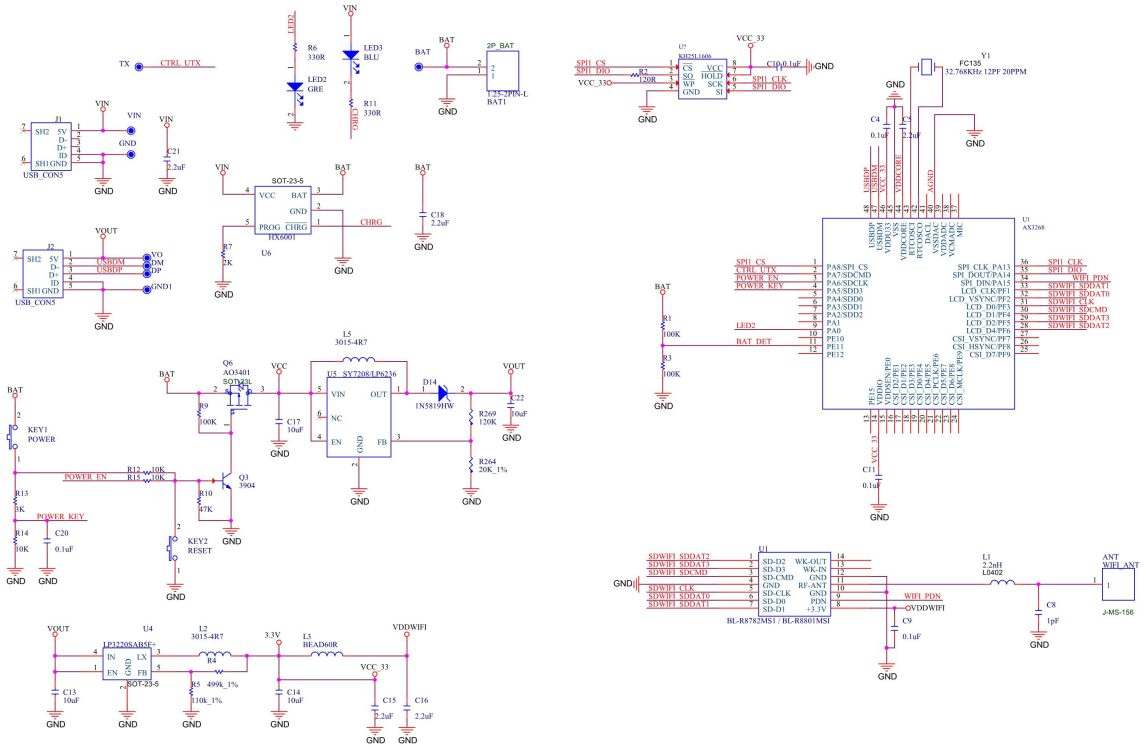

第 1 页

5. USB Camera

5.1 Image sensor GC0308 General Desciption

The GC0308 features 640V x 480H resolution with 1/6.5-inch optical format, and 4-transistor pixel structure for high image quality and low noise variations. It delivers superior image quality by powerful on-chip design of a 10-bit ADC, and embedded image signal processor.

GALAXYCORE CONFIDENTIAL

5.2 Image Sensor GC0308 General

- Standard optical format of 1/6.5 inch
- Various output formats: YCbCr4:2:2, RGB565, Raw Bayer
- Single power supply requirement (2.8v)
- Windowing support
- Horizontal /Vertical mirror
- Image processing module
- Package: CSP

5.3 Schematic Drawing of USB camera

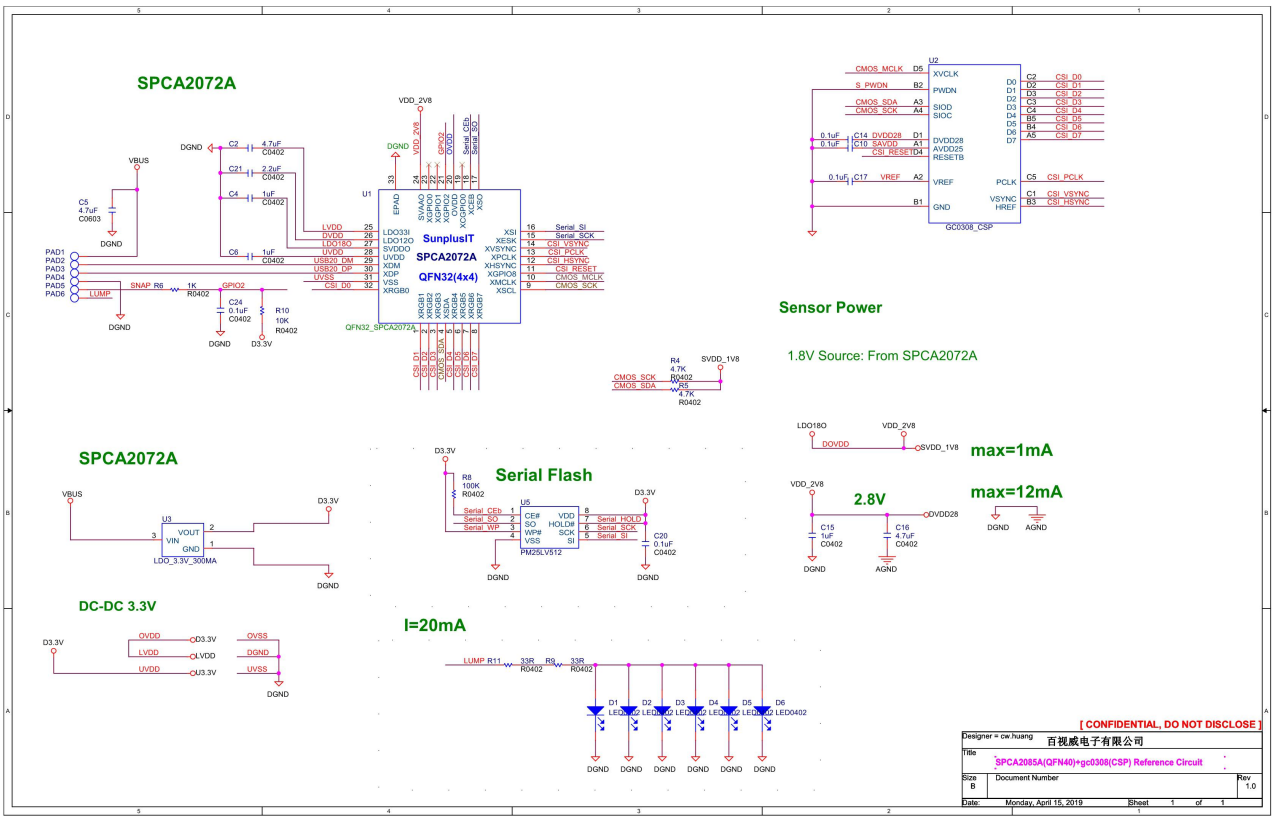

第 1 页

6. Drawing of SHWN8189WIFI Camera Module

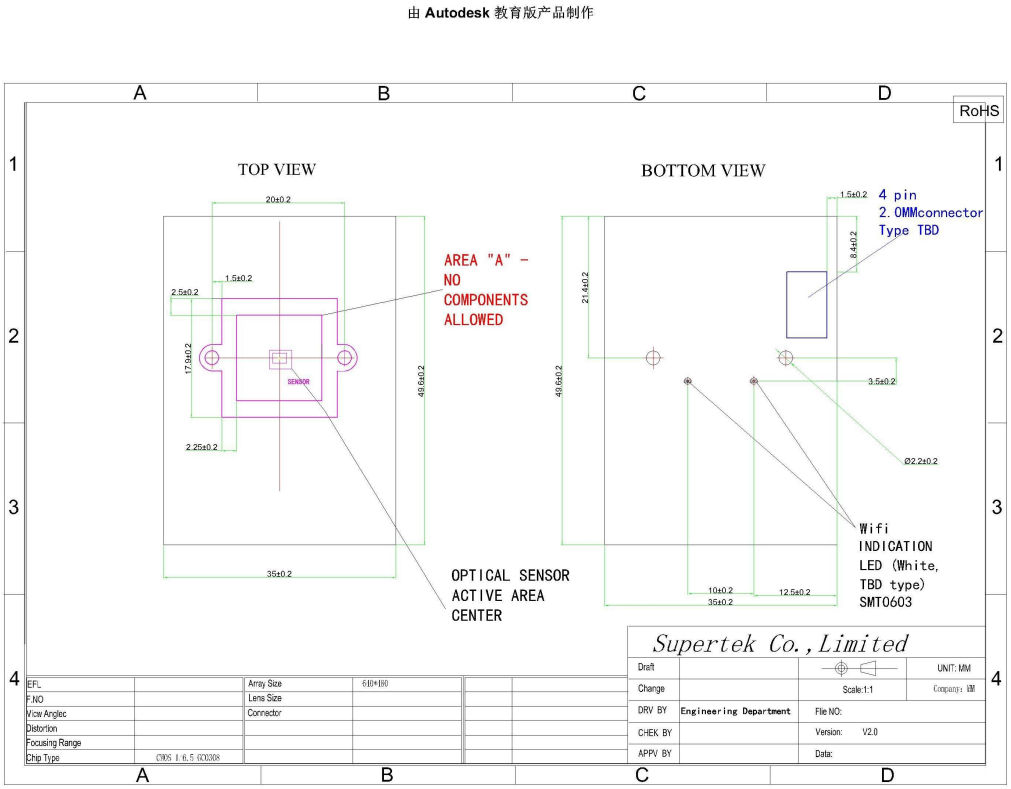

7. Environmental and Reliability Specification

NO	Test name	Condition	Sample size	Judgement
1	High Temperature storage	80℃+/-2℃ 24H	5pcs	1, no image change before and after 2, no transformation and broken mechanically 3, no focus changing of lens 4, vision inspection OK
2	Low Temperature storage	-40℃+/-2℃ 48H	5pcs	
3	Humidity storage	60℃, 95%[RH] 72H	5pcs	
4	Thermal shock	-40℃ (0.5H)~80℃ (0.5H)/cycle	5pcs	
5	Vibration test	30Hz,0.38mm&55 Hz,0.19mm, XYZ direction,0.5H/direction,	10pcs	
6	Drop test	1m/one direction. 1time/direction, total 6 direction	10pcs	

		32cycle		mechanically
5	Vibration test	30Hz,0.38mm&55Hz,0.19mm, XYZ direction,0.5H/direction,	10PCS	3. No focus changing of lens 4.Visual Inspection OK
6	Drop test	1m/one direction. 1time/direction, total 6 direction	10PCS	

8. Packaging Information

8.1 The default label contents:

Supplier：Supertek
Customer Part Number: XXXXX
Supertek Part Number: XXXX
Quantity: XXXXX
Country Of Origin: CN
Lot Number: XXXXXX

Note: Supertek has the right to update the label form and contents and will inform the customers.

8.2 Packing SPEC

- Modules are placed into a tray.
- Insert tray into a ESD protect bag.
- All the finished goods are placed in box.

9. Precautions

9.1 storage and operating conditions

To keep the product and packaging material in good condition, care must be taken to control temperature and humidity in the storage area.

- Recommended conditions:

✂ Moisture proof Scale：MSL3 exposure ≤30℃/60%RH,168 hours floor life

✂ Ambient temperature: 22±6℃

Model No.	SHWN8189WIFI
Description	WIFI CAMERA MODULE with GC0308 image sensor
Customer Name	Appletec Ltd
Version	A1.0

- Humidity: 20～60%RH
- No rapid change on temperature and humidity
- Bake condition: If the modules exposure under high temperature and humidity surroundings，they must be put in the dry case which humidity ＜10％RH more than five times of exposed time to recover the module's floor life.

- The products listed in this catalog are not designed for use under the following conditions. Storage and/or usage under following conditions are prohibited.
  - Exposure to corrosive gas such as chlorine, hydrogen sulfide, ammonia, sulfur dioxide, nitrogen oxide, etc.
  - Exposure to direct sunlight.
  - Exposure to dust.
  - Exposure to excessive moisture or wet locations.
  - Exposure to salt water or sea breezes.
  - Exposure to strong static electricity or electromagnetic waves.

9.2 Transportation and Handling

- Minimize any mechanical vibration or shock and avoid dropping of the product during transportation or dropping the product that contains the substrate.
- Since the application of static electricity or over voltage may cause defect in the product or deterioration of its reliability, caution must be taken against exposure to any static electricity generated by electrified items such as workbenches, soldering irons, tools, carrying containers, etc.
- Caution shall be taken to avoid overstress to the product.

FCC Statement
FCC standards: FCC CFR Title 47 Part 15 Subpart C Section 15.247
Integral PCB antenna;Antenna gain: 1.46 dBi

This device complies with part 15 of the FCC Rules. Operation is subject to the following two conditions: (1) This device may not cause harmful interference, and (2) this device must accept any interference received, including interference that may cause undesired operation.
Any Changes or modifications not expressly approved by the party responsible for compliance could void the user's authority to operate the equipment.
Note: This equipment has been tested and found to comply with the limits for a Class B digital device, pursuant to part 15 of the FCC Rules. These limits are designed to provide reasonable protection against harmful interference in a residential installation. This equipment generates, uses and can radiate radio frequency energy and, if not installed and used in accordance with the instructions, may cause harmful interference to radio communications. However, there is no guarantee that interference will not occur in a particular installation. If this equipment does cause harmful interference to radio or television reception, which can be determined by turning the equipment off and on, the user is encouraged to try to correct the interference by one or more of the following measures:
—Reorient or relocate the receiving antenna.
—Increase the separation between the equipment and receiver.
—Connect the equipment into an outlet on a circuit different from that to which the receiver is connected.
—Consult the dealer or an experienced radio/TV technician for help.

We will retain control over the final installation of the modular such that compliance of the end product is assured. In such cases, an operating condition on the limit modular approval for the module must be only approved for use when installed in devices produced by a specific manufacturer. If any hardware modify or RF control software modify will be made by host manufacturer,C2PC or new certificate should be apply to get approval,if those change and modification made by host manufacturer not expressly approved by the party responsible for compliance ,then it is illegal.

FCC Radiation Exposure Statement
The modular can be installed or integrated in mobile or fix devices only. This modular cannot be installed in any portable device.
This modular complies with FCC RF radiation exposure limits set forth for an uncontrolled environment. This transmitter must not be co-located or operating in conjunction with any other antenna or transmitter. This modular must be installed and operated with a minimum distance of 20 cm between the radiator and user body.

If the FCC identification number is not visible when the module is installed inside another device, then the outside of the device into which the module is installed must also display a label referring to the enclosed module. This exterior label can use wording such as the following: “Contains Transmitter Module FCC ID: 2AUJJ-EVJ-WN1 Or Contains FCC ID: 2AUJJ-EVJ-WN1 ”
When the module is installed inside another device, the user manual of the host must contain below warning statements;
1. This device complies with Part 15 of the FCC Rules. Operation is subject to the following two conditions:
(1) This device may not cause harmful interference.
(2) This device must accept any interference received, including interference that may cause undesired operation.
Note: This equipment has been tested and found to comply with the limits for a Class B digital device, pursuant to part 15 of the FCC Rules. These limits are designed to provide reasonable protection against harmful interference in a residential installation. This equipment generates, uses and can radiate radio frequency energy and, if not installed and used in accordance with the instructions, may cause harmful interference to radio communications.
However, there is no guarantee that interference will not occur in a particular installation. If this equipment does cause harmful interference to radio or television reception, which can be determined by turning the equipment off and on, the user is encouraged to try to correct the interference by one or more of the following measures:
—Reorient or relocate the receiving antenna.
—Increase the separation between the equipment and receiver.
—Connect the equipment into an outlet on a circuit different from that to which the receiver is connected.
—Consult the dealer or an experienced radio/TV technician for help.

2. Changes or modifications not expressly approved by the party responsible for compliance could void the user's authority to operate the equipment.
The devices must be installed and used in strict accordance with the manufacturer's instructions as described in the user documentation that comes with the product.
Any company of the host device which install this modular with limit modular approval should perform the test of radiated & conducted emission and spurious emission,etc. according to FCC part 15C : 15.247 and 15.209 & 15.207 ,15B Class B requirement, Only if the test result comply with FCC part 15C : 15.247 and 15.209 & 15.207 ,15B Class B requirement， then the host can be sold legally.