Components & Descriptions

● Chair

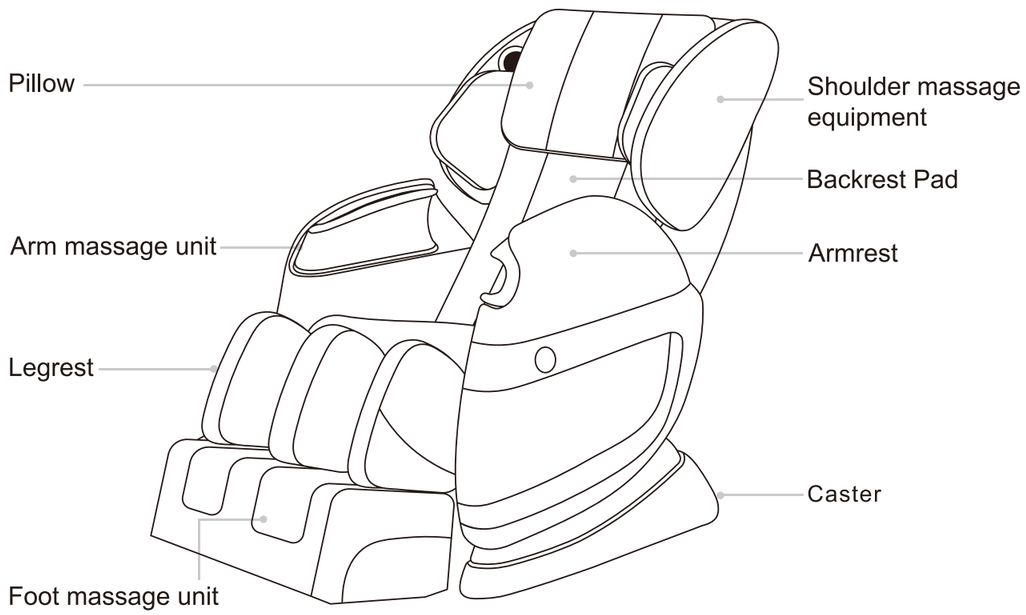

● Power cord and power socket

Attention1:Before inserting power cord,please ensure main power switch is off.
Attention2:Do not disassemble or replace the power cord when it is damaged.A retailer or a qualified professional shall be needed.

● Main power switch

Turn on the main power switch, massage chair into standby mode

● Controller

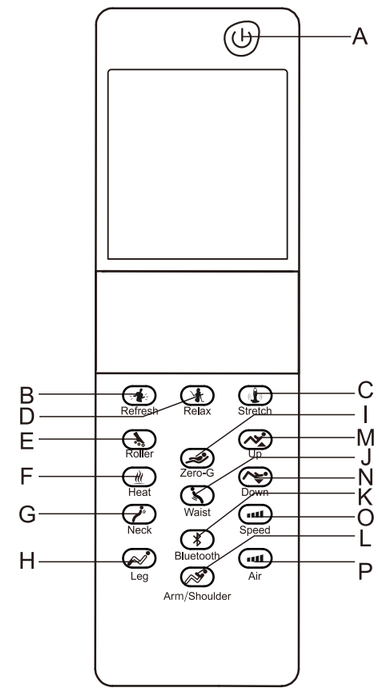

A	Power	Press the button to light on the LCD screen. Press any massage function button to start massage. Press the button again to stop all massage function, the massage rollers will return to its original position
B	Refresh function	Press the button to begin Refresh function
C	Stretch	Press this button to begin Stretch massage
D	Relax	Press this button to begin Relax massage
E	Roller	Press the button to activate the rolling function at the bottom of the feet.Press again to stop the function.
F	Heat	Press the button to activate the heating on the back,Press again to stop the heating function.
G	Neck massage	Press the button to start massage on the neck. Press the button again to stop the neck massage.
H	Leg air massage	Press the button to start rhythmic air pressure massage on legs. Press the button to stop the function.
I	Zero Gravity	Press this button to activate the Zero-Gravity function. The icon ( ) will be lighted. Press the button to return to idle position. The icon ( ) will not be lighted.
J	Waist massage	Press this button to start roller massage on your waist. Press the button again to stop the function.
K	Bluetooth	Press the button to power Bluetooth ON/OFF.
L	Arm/Shoulder	Press the button to start Arm and Shoulder massage with rhythmic air pressure.Press again to stop the function.
M	Up	Angle Adjustment control button for massage chair. Press and hole“up”button until the chair is at the desired angle.
N	Down	Press and hole“down”button until the chair is at the desired angle.
O	Speed	The speed Adjustment button for Kneading speed. Each time the button is pressed, the intensity will increase by 1 level. The maximum level is 3. The speed can be adjusted in the cycle.
P	Air	The Air Intensity Adjustment button for Air-pressure Each time the button is pressed, the intensity will increase by 1 level. The maximum level is 3.

WARNING	● Please do not spray water or other liquid on the chair. ● Do not operate the chair with wet hand.
CAUTION	● Do not sit on the controller, do not drop or step on the controller. Do not pull over the wire. ● Do not press the button with sharp object or it will result in damage.

Before use

- When the temperature is too low to run the machine, please increase the ambient temperature gradually, do not increase the temperature in sudden. Please move the chair to the warm place and keep on waiting for 1 hour before starting.Or it will result in moisture of parts and abnormal operation.

  → Or it will result in moisture of parts and abnormal operation.

How to assemble the shoulder

- Unzipping the shoulder device, put the iron part into the slots on the end of the shaft, let the hole “A” match with the slots “B”
- Connect the air hose “E” to the air hose “F” exposed on the backrest.
- Use the screw (M6 X 16) to fix on the shaft of the backrest.
- Zip the cover
- Repeat above steps to assembly the other shoulder.

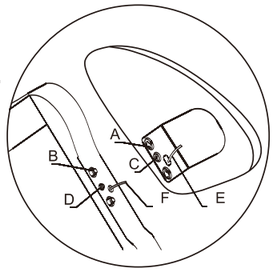

How to assemble backrest pad and seat cushion

- Connect the wire of the heater plug from the backrest to underneath of the seat (Fig 1)
  Connect the cable of remote controller with the cable under seat.(Fig 1)
- Connect the backrest and the seat by zipper. (Fig 2)
- Attached backrest pad with zipper. (Fig 3)
- Attached the pillow pad using the velcro fasten (fig 4)

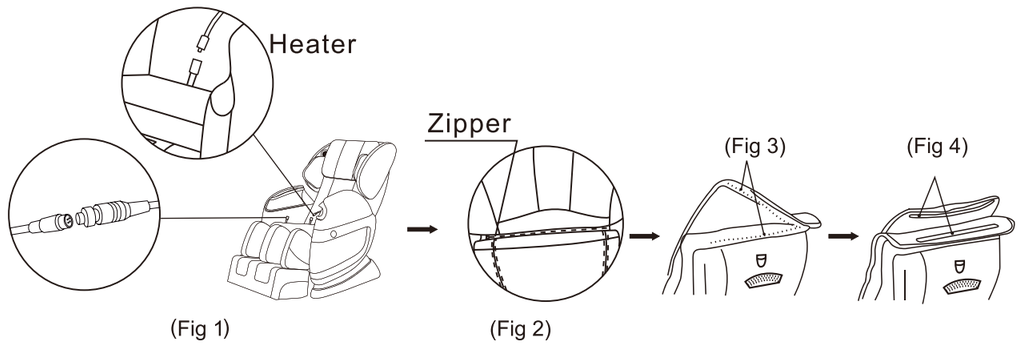

Where to place the chair

Please make sure that the massage chair has about 19.685in in front of it, leaving about 19.685in behind the chair to allow free reclining of the backrest.

CAUTION

- Please do not use in a humid place such as sauna or bathroom.
- Place on a levels surface before use.
- Please do not use in the following situations: in a utility room or dusty place or in high temperatures (over 40℃).
- Do not place it in the sun or near heating appliances.
- Please keep cigarettes, ashtrays or flammable goods away from the massage chair.

- To prevent damage to the floor and reduce noise, please lay carpet under the massage chair (do not use an electric blanket).
- Please be careful placing this machines, as it is heavy.
- To avoid excessive noise, make sure the massage chair is a minimum of 1 meter away from the TV, radio, and other AV machine.

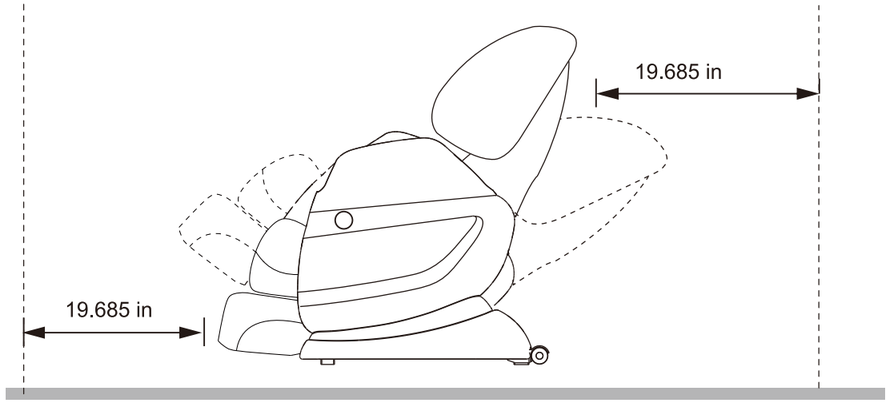

- Please ensure there is a chair and accessories inside the packing box

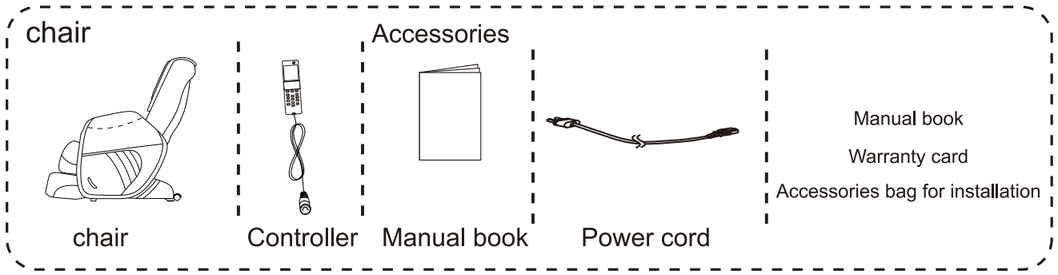

How to move

When moving,please turn off main power switch,then unplug the power plug.

Using caster to move

Please put the back of the chair to the bottom and then hit the rear wheel, then move

Lift up the calvesrest then recline the chair to about 45 degrees to easily move the chair with a slight pull or push

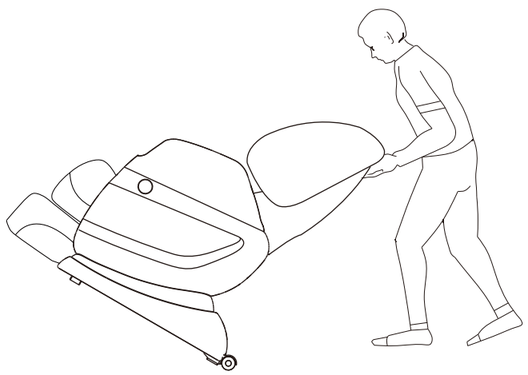

CAUTION

- The chair cannot be moved if the passage is less than 29.528in in width.
- Contact the dealer in case you cannot move the chair normally.
- Due to the heavy weight of the chair,make sure that it will not damage your waist or other parts of your body during moving.
- Controller is connected to the chair,make sure it does not fall during moving.
- Do not move the chair with person loaded.
- Please move the chair after unplugging.
  ---->Otherwise it may cause damages to the power plug,causing fire disaster or electric.

How to open the backrest

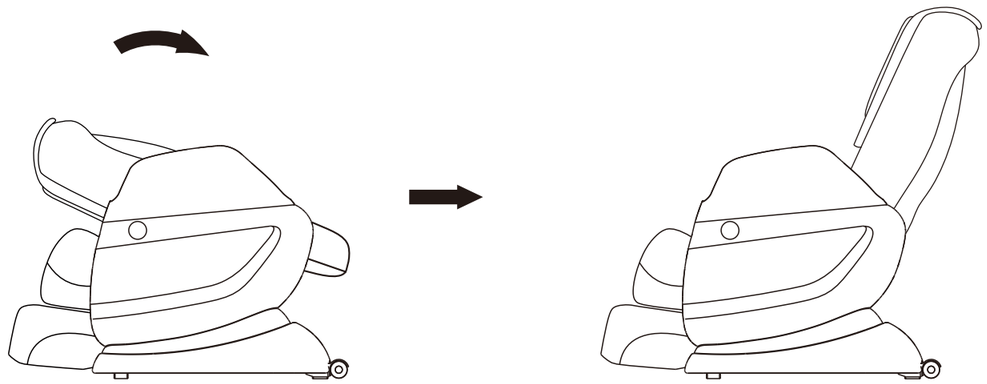

Turn the backrest to back until a “click” sound is heard.

Fold backrest

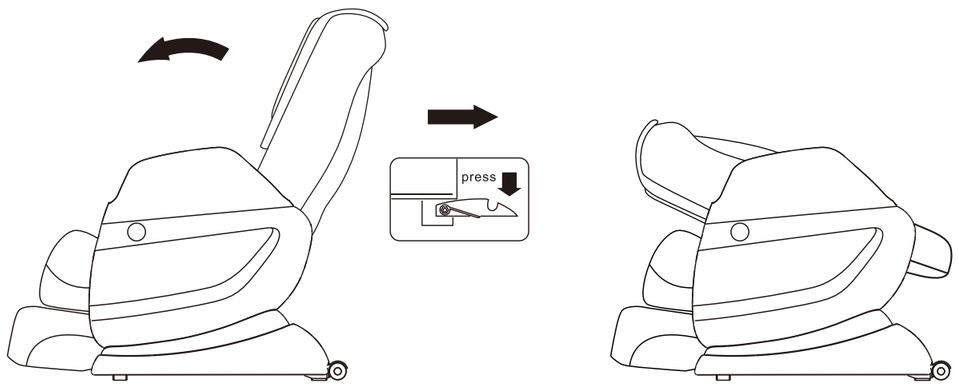

Release lock leaver as figured to lay to backrest onto the seat cushion.

How to switch on the power

① Insert power cord into outlet

② Turn on main power switch on the back of the chair

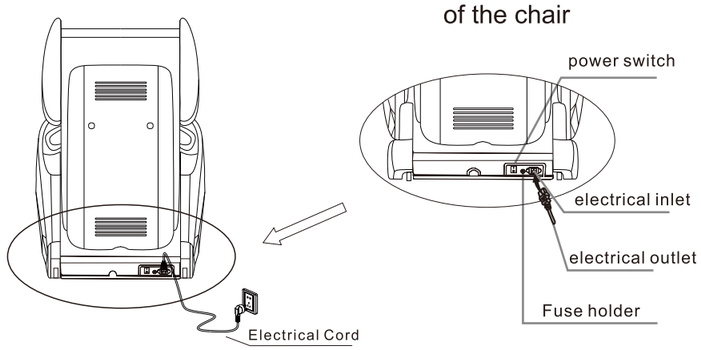

※ If the rollers get stuck,turn of the switch and press the ON/OFF button,the roller will be back to its initial position.

WARNING	● Do not connect power cord to an external transformer
CAUTION	● Ensure the main power switch is off before plugging the power socket or controller. ● Please insert power plug and controller plug fully ● Read this manual book carefully before using,set the chair according to the requires,ensure normal operation

Connecting the power

Check the power cord,power plug,socket on the chair,main power switch,controller are unbroken for the first time use or use after long time storage.Then plug power cord.

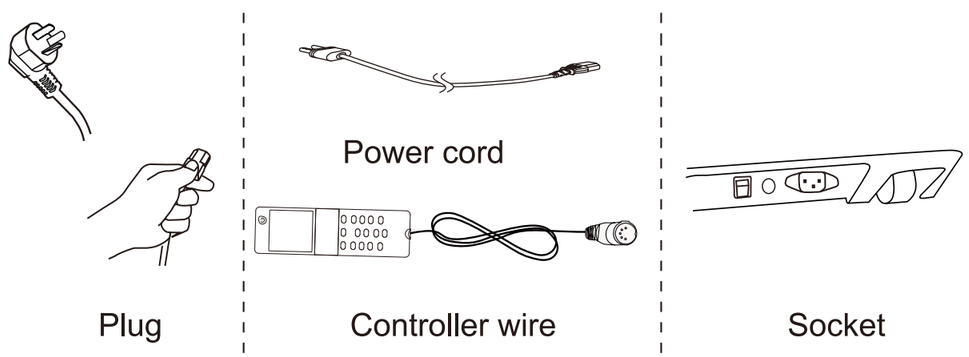

Confirm the fabric

Make sure if the fabric is damaged according to the following procedures before use.

① Open zipper and back cushion from one side

② Put your hand between cushion and backrest to see if the fabric is damaged.

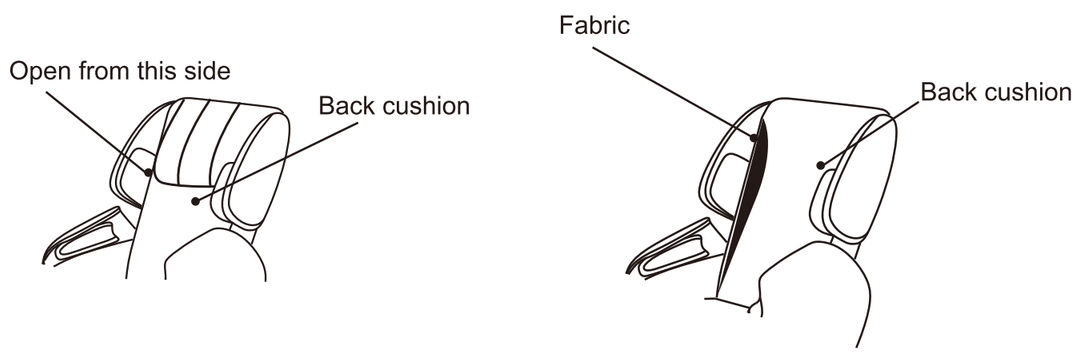

CAUTION	Before using the chair, confirm that whether there is damage in the material of the armchair or of other parts. In case of damage, even the smallest tear-ing, in the chair, please stop using it immediately, trun off the power switch, unplug the chair, and contact the customer service center. Never use the armchair with dismantled cushion or damaged material, otherwise there will be serious safety hazard.

Adjusting massage chair

Sitting in the chair

Adjust the backrest to your desired position by press and holding on the “UP” “DOWN” buttons.

CAUTION	● Do not sit in the chair when legrest is rising,or after legrest rises,it may result in accident or reclining chair,causing personal injury. ● Raise the chair before using.Enjoy the massage from light massage course. Adjust the angel of your reclining angel according to your body figure. ● Do not stand on the legrest, it will break the legrest or even the whole chair.
WARNING	When adjusting angle,please make sure there is no person(Especially children) or pet around.Besides,there must be at least 11.811in space at the front or back of the chair,and there is no foreign matter in the way when rotating.

Start massage

1. Connecting the power,turn on main power switch

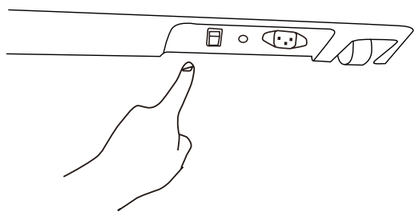

- In the Auto Mode

  You may change from one massage program to another at any time without having to wait for it to complete. The twinkled button is the current massage mode

- In the Manual Mode

  You may change from one massage program to aonther at any time without having to wait for it to complete.

After use

Rise the chair up and lower the footrest completely.
Press ON/OFF key to turn off the chair,wait until chair gets back to its initial status.
After airbags deflate completely,rollers get back to its initial position,sole massage stops, heating stops,then step out of the legrest.Do not stand in the legrest.Turn off main power switch,unplug power plug.

CAUTION

After you use the chair, turn off the main power switch, and unplug the power plug from the socket.
→Otherwise, accident or injuries may be caused by children or pets.
After you use the chair, be sure to raise back completely and lower the footrest completely.
After you use the chair, please clean it and place it in dry places.
When unplugging the power cord, please do not pull it directly; instead, you should unplug it pinching the power plug.
Please be sure to put the power cord away in prevention of tripping over.

Troubleshooting

If there is still a problem after trying the solutions given in this troubleshooting guide, stop using the chair immediately to prevent accident or injury, and unplug the power plug from the wall outlet. Contact the vendor or your nearest service center for assistance.

Problem	Causes and troubleshooting
The massage chair can not opoerate even though it has been connected to the power supply.	● Check whether the plug is well connected and working well ● Check whether the main switch on the massage chair is turned to position "I"
During operation, the controller is working, but the chair can not work	● The massage chair could be overheated after prolonged use. It will automatically cool down to resume its normal condition. ● Please turn off the power and allow the chair to cool down for 30 or 50 minutes
During operation, both the controller and the massage can not work	● If the set-time in the Timer is complete, please press the timer function again to resume operation ● Switch OFF the power and switch ON again to restart the chair

Safety check

Regular Maintenance Will Preserve the Life of Your Chair

Have you experienced any of these problems?

- The chair does not start with the Main POWER switch set to ON.
- The power cord has been cracked or scratched.
- The power cord or plug becomes abnormally hot.
- The chair produces a burnt smell, abnormal sound or vibration.
- The auto timer function does not work in some cases.
- Other failures.

If you find anything listed on the left, stop using and unplug the power cord from the outlet to prevent failure or an accident. Be sure to contact the vendor or our service center for maintenance.

To use safely

The chair fabric (roller fabric) is a consumable part, and its service life is 3 years (conditions of use: two 15-minute sessions a day, every day).
For safe use, periodic inspection by the vendor is recommended before the end of its service life.
*Durable years vary depending on conditions of use.
* After about five years of use, a professional inspection is recommended even if there are no symptoms or problems. For inspection fees, contact the vendor.

Storage and care

Storage

- After cleaning the dirt and dust,place the chair in a dry place
- If the chair is left unused for a while,please cover the chair to prevent from dust.
- Pets sometimes chew on power cord,so try to keep the pets away from the chair even when it is stored.

⚠CAUTION	Do not install the chair where it can come into contact with direct heat, such as direct sunlight or a radiator.

Care and Maintenance

⚠CAUTION	● When cleaning the chair, be sure to unplug the power plug from the wall outlet first. Do not plug or unplug the power plug with wet hands.

[Caring for the Back Pad and Covers]
Soak a piece of soft cloth in lukewarm water in which a small amount of mild detergent has been added. Then thoroughly wring it out before cleaning off any spots or grime.

⚠CAUTION	● The fabric color can change if the chair is in contact with vinyl covers or wall coverings for a prolonged period of time.

[Caring for Other Plastic Parts]
Soak a piece of soft cloth in lukewarm water in which a small amount of mild detergent has been added, thoroughly wring it out, and clean off any spots or grime. Then wipe with a dry cloth so that no detergent residue remains.

⚠CAUTION	● Do not use alcohol-based or other household cleaning products or abrasives because they can scratch or crack the finish or cause color to fade.

[Caring for the Remote Control]
Wipe dirt off the remote control with a dry cloth.

⚠CAUTION	● Never use a moistened or wet cloth. May result in a mechanical failure.

Product specification

Type	LC3200-S
Power	AC120V~ 60Hz
Rated power	120W
Rated time	15 minutes
Dimension	Approx 29.33in*54.17in(72.28in)*44.49（30.51）in (W*L*H) The length and height figures in () represent the dimensions when fully reclined.
Weight	About 149.91IB
Outer material	PU leather
Accessories	Main power cord,Controller,manual book,warranty card, accessories bag for installation

This device complies with part 15 of the FCC Rules. Operation is subject to the following two conditions:
(1) This device may not cause harmful interference, and (2) this device must accept any interference received, including interference that may cause undesired operation.

Changes or modifications not expressly approved by the party responsible for compliance could void the user's authority to operate this device.

NOTE: This equipment has been tested and found to comply with the limits for a Class B digital device, pursuant to part 15 of the FCC Rules. These limits are designed to provide reasonable protection against harmful interference in a residential installation. This equipment generates, uses, and can radiate radio frequency energy and, if not installed and used in accordance with the instructions, may cause harmful interference to radio communications. However. there is no guarantee that interference will not occur in a particular installation. If this equipment does cause harmful interference to radio or television reception, which can be determined by turning the equipment off and on, the user is encouraged to try to correct the interference by one or more of the following measures:
-Reorient or relocate the receiving antenna.
-Increase the separation between the equipment and receiver.
-Connect the equipment into an outlet on a circuit different from that to which the receiver is connected.
-Consult the dealer or an experienced radio/TV technician for help.

To satisfy FCC / IC RF exposure requirements, a separation distance of 20 cm or more should be maintained between the antenna of this device and persons during device operation.
To ensure compliance, operations at closer than this distance is not recommended.