Microwave Oven

INSTRUCTION MANUAL

Model: EMA17G
EMB17G

Read these instructions carefully before using your microwave oven, a**nd keep it carefully.**

If you follow the instructions, your oven will provide you with many years of good service.

SAVE THESE INSTRUCTIONS CAREFULLY

PRECAUTIONS TO AVOID POSSIBLE EXPOSURE TO EXCESSIVE MICROWAVE ENERGY

(a) Do not attempt to operate this oven with the door open since open door operation can result in harmful exposure to microwave energy.
It is important not to defeat or tamper with the safety interlocks.

(b) Do not place any object between the oven front face and the door or allows soil or cleaner residue to accumulate on sealing surfaces.

(c) Do not operate the oven if it is damaged. It is particularly important that the oven door close properly and that there is no damage to the:
(1) DOOR (bent)
(2) HINGES AND LATCHES (broken or loosened)
(3) DOOR SEALS AND SEALING SURFACES

(d) The oven should not be adjusted or repaired by anyone except properly qualified service personnel.

Specifications

Model:	EMB17G4V/5MA	EMA17G4V/5MA
Rated Voltage:	208/230V~ 60Hz	208/230V~ 60Hz
Rated Input Power (Microwave):	3200W	3000W
Rated Output Power (Microwave):	2100W	1800W

IMPORTANT SAFETY INSTRUCTIONS

When using electrical appliances basic safety precautions should be followed, including the following:

WARNING - To reduce the risk of burns, electric shock, fire, injury to persons or exposure to excessive microwave energy:

1. Read all instructions before using the appliance.
2. Read and follow the specific: "PRECAUTIONS TO AVOID POSSIBLE EXPOSURE TO EXCESSIVE MICROWAVE ENERGY" found on page 2.
3. This appliance must be grounded. Connect only to properly grounded outlet. See "GROUNDING INSTRUCTIONS" found on page 5.
4. Install or locate this appliance only in accordance with the provided installation instructions.
5. Some products such as whole eggs and sealed containers - for example, closed glass jars - are able to explode and should not be heated in this oven.
6. Use this appliance only for its intended use as described in the manual. Do not use corrosive chemicals or vapors in this appliance. This type of oven is specifically designed to heat, cook or dry food. It is not designed for industrial or laboratory use.
7. As with any appliance, close supervision is necessary when used by children.
8. Do not operate this appliance if it has a damaged cord or plug, if it is not working properly, or if it has been damaged or dropped.
9. This appliance should be serviced only by qualified service personnel. Contact nearest authorized service facility for examination, repair, or adjustment.
10. Do not cover or block any openings on the appliance.
11. Do not store this appliance outdoors. Do not use this product near water - for example, near a kitchen sink, in a wet basement, near a swimming pool, or similar location.
12. Do not immerse cord or plug in water.
13. Keep cord away from heated surface.
14. Do not let cord hang over edge of table or counter.
15. When cleaning surfaces of door and oven that comes together on closing the door, use only mild, nonabrasive soaps, or detergent applied with a sponge or soft cloth.
16. To reduce the risk of fire in the oven cavity:
    1). Do not overcook food. Carefully attendappliance when paper, plastic, or other combustible materials are placed inside the oven to facilitate cooking.
    2). Remove wire twist-ties from paper or plastic bag before placing bag in oven.
    3). If material inside of the oven ignite, keep oven door closed, turn oven off, and disconnect the power cord, or shut off power at the fuse or circuit breaker panel.
    4). Do not use the cavity for storage purposes. Do not leave paper products, cooking utensils, or food in the cavity when not in use.

17. Liquids, such as water, coffee, or tea are able to be overheated beyond the boiling point without appearing to be boiling. Visible bubbling or boiling when the container is removed from the microwave oven is not always present.
THIS COULD RESULT IN VERY HOT LIQUID SUDDENLY BOILING OVER WHEN THE CONTAINER IS DISTURBED OR A UTENSIL IS INSERTED INTO THE LIQUID.
To reduce the risk of injury to persons:
1) Do not overheat the liquid.
2) Stir the liquid both before and halfway through heating it.
3) Do not use straight-sided containers with narrow necks.
4) After heating, allow the container to stand in the microwave oven for a short time before removing the container.
5) Use extreme care when inserting a spoon or other utensil into the container.

SAVE THESE INSTRUCTIONS

GROUNDING INSTRUCTIONS

This appliance must be grounded. In the event of an electrical short circuit, grounding reduces the risk of electric shock by providing an escape wire for the electric current. This appliance is equipped with a cord having a grounding wire with a grounding plug. The plug must be plugged into an outlet that is properly installed and grounded.

WARNING - Improper use of the grounding can result in a risk of electric shock. Consult a qualified electrician or serviceman if the grounding instructions are not completely understood, or if doubt exists as to whether the appliance is properly grounded. If it is necessary to use an extension cord, use only a 3-wire extension cord that has a 3-blade grounded plug, and 3-slot receptacle that will accept the plug on the appliance. The marked rating of the extension cord shall be equal to or greater than the electrical rating of the appliance.

DANGER - Electric Shock Hazard
Touching some of the internal components can cause serious personal injury or death. Do not disassemble this appliance.

WARNING - Electric Shock Hazard
Improper use of the grounding can result in electric shock. Do not plug into an outlet until appliance is properly installed and grounded.

1. A short power-supply cord is provided to reduce the risks resulting from becoming entangled in or tripping over a longer cord.
2. Longer cord sets or extension cords are available and may be used if care is exercised in their use.
3. If a long cord or extension cord is used:
   1) The marked electrical rating of the cord set or extension cord should be at least as great as the electrical rating of the appliance.
   2) The extension cord must be a grounding-type 3-wire cord.
   3) The longer cord should be arranged so that it will not drape over the counter top or tabletop where it can be pulled on by children or tripped over unintentionally.

RADIO INTERFERENCE

1. Operation of the microwave oven may cause interference to your radio, TV or similar equipment.
2. When there is interference, it may be reduced or eliminated by taking the following measures:
   1) Clean door and sealing surface of the oven
   2) Reorient the receiving antenna of radio or television.
   3) Relocate the microwave oven with respect to the receiver.
   4) Move the microwave oven away from the receiver.
   5) Plug the microwave oven into a different outlet so that microwave oven and receiver are on different branch circuits.

SAFETY

1. The oven must be on a leveled surface.
2. Use only the specified bag size when using Direct Access Popcorn.
3. The oven has several built-in safety switches to ensure that the power remains off when the door is open. Do not tamper with these switches.
4. Do not operate the microwave oven empty. Operating the oven with no food or food that is extremely low in moisture can cause fire, charring or sparking.
5. Do not heat baby bottles or baby food in the microwave oven. Uneven heating may occur and could cause physical injury.
6. Do not heat narrow-necked containers, such as syrup bottles.
7. Do not attempt to deep-fry in your microwave oven.
8. Do not attempt home canning in this microwave oven, as it is impossible to be sure all contents of the jar have reached boiling temperature.
9. Do not use this microwave oven for commercial purpose. This microwave oven is made for household use only.
10. To prevent delayed eruptive boiling of hot liquids and beverages or scalding yourself, stir liquid before placing the container in the oven and again halfway through cooking time. Let stand in the oven for a short time and stir again before removing the container.
11. Use carefully when cooking food in the microwave oven to avoid burning due to excessive cooking.
12. Failure to maintain the oven in a clean condition could lead to deterioration that could adversely affect the life of the appliance and possibly result in a hazardous situation.

This device complies with part 18 of the FCC Rules.

UTENSILS

CAUTION - Personal Injury Hazard
Tightly-closed utensils could explode. Closed containers should be opened and plastic pouches should be pierced before cooking.
See the instructions on "Materials you can use in microwave oven or to be avoided in microwave oven."
There may be certain non-metallic utensils that are not safe to use for microwaving.
If in doubt, you can test the utensil in question following the procedure below.

Utensil Test:

1. Fill a microwave-safe container with 1 cup of cold water (250ml) along with the utensil in question.
2. Cook on maximum power for 1 minute.
3. Carefully feel the utensil. If the empty utensil is warm, do not use it for microwave cooking.
4. Do not exceed 1 minute cooking time.

Materials you can use in microwave oven

Utensils	Remarks
Browning dish	Follow manufacturer’s instructions. The bottom of browning dish must be at least 3/16 inch (5mm) above the turntable. Incorrect usage may cause the turntable to break.
Dinnerware	Microwave-safe only. Follow manufacturer's instructions. Do not use cracked or chipped dishes.
Glass jars	Always remove lid. Use only to heat food until just warm. Most glass jars are not heat resistant and may break.
Glassware	Heat-resistant oven glassware only. Make sure there is no metallic trim. Do not use cracked or chipped dishes.
Oven cooking bags	Follow manufacturer’s instructions. Do not close with metal tie. Make slits to allow steam to escape.
Paper plates and cups	Use for short–term cooking/warming only. Do not leave oven unattended while cooking.
Paper towels	Use to cover food for reheating and absorbing fat. Use with supervision for a short-term cooking only.
Parchment paper	Use as a cover to prevent splattering or a wrap for steaming.
Plastic	Microwave-safe only. Follow the manufacturer’s instructions. Should be labeled "Microwave Safe". Some plastic containers soften, as the food inside gets hot. "Boiling bags" and tightly closed plastic bags should be slit, pierced or vented as directed by package.
Plastic wrap	Microwave-safe only. Use to cover food during cooking to retain moisture. Do not allow plastic wrap to touch food.
Thermometers	Microwave-safe only (meat and candy thermometers).
Wax paper	Use as a cover to prevent splattering and retain moisture.

Materials to be avoided in microwave oven

Utensils	Remarks
Aluminum tray	May cause arcing. Transfer food into microwave-safe dish.
Food carton with metal handle	May cause arcing. Transfer food into microwave-safe dish.
Metal or metal-trimmed utensils	Metal shields the food from microwave energy. Metal trim may cause arcing.
Metal twist ties	May cause arcing and could cause a fire in the oven.
Paper bags	May cause a fire in the oven.
Plastic foam	Plastic foam may melt or contaminate the liquid inside when exposed to high temperature.
Wood	Wood will dry out when used in the microwave oven and may split or crack.

SETTING UP YOUR OVEN

Names of Oven Parts and Accessories

Remove the oven and all materials from the carton and oven cavity.

Your oven comes with the following accessories:

Instruction Manual 1

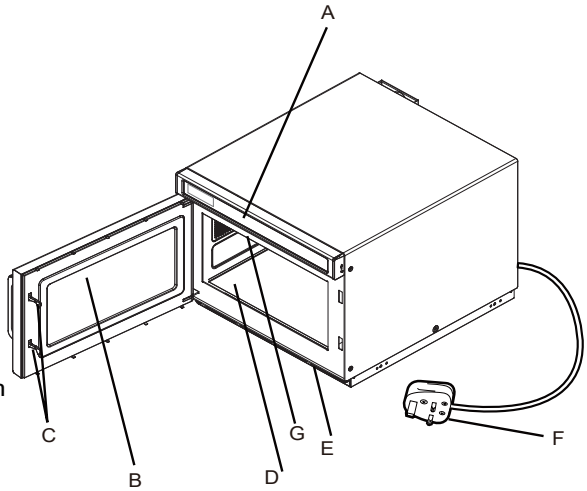

A) Control panel
B) Observation window
C) Safety interlock system
D) Ceramic board
E) Filter
F) Plug
G) Scanner

Note: 1) Don't press the ceramic board forcibly.

2) Take and put the utensils gently during the operation in order to avoid damage to the ceramic board.

3) After using, don't touch the ceramic board by hand in order to avoid high temperature scald.

Countertop Installation

Remove all packing material and accessories. Examine the oven for any damage such as dents or broken door. Do not install if oven is damaged.

Cabinet: Remove any protective film found on the microwave oven cabinet surface.

Installation

1. Select a level surface that provide enough open space for the intake and/or outlet vents(Figure1).

Fig 1

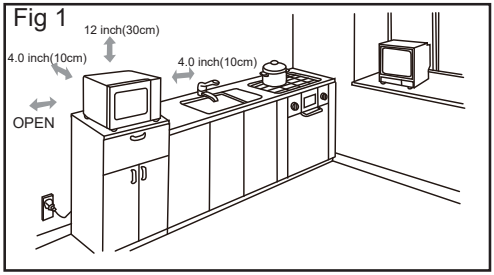

A 10-cm spacing should be kept between the appliance and right and back walls, and a 30-cm spacing kept on the top. Never dismantle the applicance's feet, nor block the air intake and exhaust opening. The left side must be open.

1) Blocking the intake and/or outlet openings can damage the oven.
2) Place the oven as far away from radios and TV as possible. Operation of microwave oven may cause interference to your radio or TV reception.
3) Plug your oven into a standard household outlet. Be sure the voltage and the frequency is the same as the voltage and the frequency on the rating label.

4) Warning: The plug socket,electric appliances or the appliance which are liable effected by heat and moisture should be kept away from any vents on the oven.

2.Stacking and installation of the microwave oven. The maximum height of stacking shall be two layers. Specific stacking installation is as follows

(A)Unscrew and remove the mounting plate, and then tighten the screws.

(B)Remove the four screws as shown in Figure.

(C)Mount the mounting plate to the lower position and fix the screws that are just loosened.

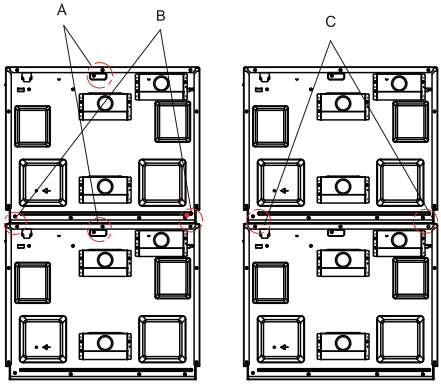

Cleaning Instructions

Always keep the oven clean

1. Cleaning the glass viewing window, the inner door panel and oven front face.
   For best performance and to maintain the high degree of safety, the inner door panel and oven front face should be free of food or grease build-up. Wipe these parts with a mild detergent, rinse and wipe dry. Never use abrasive powders or pads.

2. Cleaning the control panel and plastic parts.

Do not apply a detergent or an alkaline liquid spray to the control panel and plastic parts, as this may cause damage to these parts.
Use a dry cloth (not a soaked cloth) to clean these parts.

3. Cleaning the oven interior

After use be sure to clean up spilled liquids, spattered oil and food debris as quickly as possible. If the oven is used when dirty, efficiency drops and the dirt gets stuck on the oven surface and may cause bad odours. Clean the interior with a cloth soaked in warm water with a mild detergent dissolved in it, then rinse the soap off with a damp cloth.

4. Cleaning the oil blockage regularly, keep the oil blockage clear .Otherwise,the stain on the oil blockage will drop on the food.

5. Cleaning the filter regularly, keep it clear .The appliance will over heat when the filter is blocked.

6.When the appliance is operated,oil blockage and filter location must correct,avoiding to damage other parts(the installation in page 19and 20).

CAUTION: Do Not wipe plastic and painted sections of the oven with bleach, thinners or other cleaning agents, as this may cause these parts to dissolve or change sharp.

OPERATION

Control Panel(with brailler) and Features

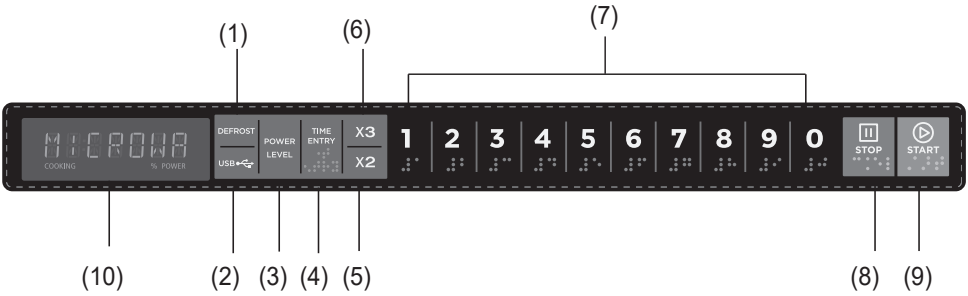

(1) Defrost Button

(2) USB Button

(3) Power Level Button

(4) Time Entry Button

(5) Double Quantity Button

(6) Triple Quantity Button

(7) Number Buttons

(8) Stop Button

(9) Start Button

(10) Display

OPERATION INSTRUCTION

Appendix. A User Options

Items bolded below are the default values.

OPTION	SETTING	DISCRIPTION
1 EOC Tone	OP:10	Beeper sounds three times
	OP:11	Continuous beep
	OP:12	5 quick beeps（repeating)
2 Beeper Volume	OP:20	Beeper Off
	OP:21	Low
	OP:22	Medium
	OP:23	High
3 Key Tone On/Off	OP:30	Off
	OP:31	On
4 Keyboard Window	OP:40	No operation in ready, pause or set state for 15sec, idle mode will be entered
	OP:41	No operation in ready, pause or set state for 30sec, idle mode will be entered
	OP:42	No operation in ready, pause or set state for 60sec, idle mode will be entered
	OP:43	No operation in ready, pause or set state for 120sec, idle mode will be entered
5 On the Fly	OP:50	Pressing number keys can’t switch
	OP:51	Pressing number keys can switch
6 Door Reset	OP:60	Open the door to enter pause mode
	OP:61	Open the door and return
7 Max Time	OP:70	Maximum cook time is 60 minutes
	OP:71	Maximum cook time is 10 minutes
8 Manual Programming	OP:80	Manual Programming disabled
	OP:81	Manual Programming Enabled
0 Clean Filter	OP:00	Off-Never Display Clean filter
	OP:01	Weekly-Display every 7 days
	OP:02	Monthly-Display every 30 days
	OP:03	Quarterly-Display every 90 days

Note: See "16. User Option Mode" for detailed setting steps.

Appendix. B Default Cook Times

Press the number key to quickly activate the preset time and firepower.

For model sold to Europe and America

Number key	Display (Time)	Power
1	0:10	100%
2	0:20	100%
3	0:30	100%
4	0:45	100%
5	1:00	100%
6	1:30	100%
7	2:00	100%
8	2:30	100%
9	3:00	100%
0	3:30	100%

1. Power Up

When the oven is electrified for the first time, “ ------- ” will display on the screen.
If the “ STOP ” button is pressed, the oven will enter Idle Mode.

2. Idle Mode

In Idle Mode, the screen will display “ ECO ”.

Notes:
(1) In Pause Mode or Ready Mode, if there is no operation of any button within 1 minute and you have set “OP:40”, “OP:41”, “OP:42” or “OP:43” , the oven will enter to Idle Mode after 15, 30, 60, or 120 seconds correspondingly.
(2) If you press the “ STOP ” button, a buzzer will ring, but nothing will work.

3. Ready Mode

(1) In this mode, the oven is ready to begin a cook cycle.
(2) Opening and closing the door while the oven is in Idle Mode will put the oven into Ready Mode.
(3) During Ready Mode, “READY” will display.

4. Door Open Mode

(1) When the furnace door is open, the oven will enter the Door Open Mode.

Notes:
(1) When the door is open, if User Option OP:60 is selected and the oven was running a manual cook entry or preset program cook mode, the oven will enter Pause Mode. If User Option OP:61 is selected and the oven was running a manual cook entry or preset program cook mode, the oven will enter the Door Open Mode.
(2) In this mode, “Time Entry” or “Defrost” can not be pressed to enter cooking setting.

5. Pause Mode

(1) When the microwave oven is running in its own or preset cooking state, press " STOP " to enter Pause Mode. The screen will display remaining cooking time.
(2) Press " STOP " to enter Ready Mode or press " START " to start cooking.

6. Manual Cook Entry Mode

(1) You can manually enter a cook time and power level while in this mode.
(2) Press "TIME ENTRY" and press number keys to enter cooking time. The maximum time is 60 minutes.
(3) Press "POWER" and press number keys to enter power level 0-10.
(4) Press " START " to start cooking.

Level	10	9	8	7	6	5	4	3	2	1	0
Power	100%	90%	80%	70%	60%	50%	40%	30%	20%	10%	0%

7. Preset Program Cook Mode

(1) In Ready Mode, press number key "0--999" to select a preset program.
(2) Press " START " to start cooking.

8. End of Cook Cycle Mode

(1) After the time has expired in a Manual Cook Entry Mode or Preset Program Cook Mode, the oven will enter the End of Cook Cycle Mode.
(2) During this mode, "DONE" will display.
(3) If the OP:11 or OP:12 is selected, the oven will continue to sound until you open the door or press " STOP ". If the OP:10 is selected, the oven will sounds three times and then display "DONE".

9. On the Fly Cooking

(1) In Preset Program Cook Mode, if the OP:51 is set, press number key "0-999" to select other preset program.
(2) Press " START " to start cooking.

10. Time Defrost Function

(1) In Ready Mode, press "DEFROST" button.
(2) Press number keys to enter time. The maximum time is 99 minutes and 99 seconds.
(3) Press " START " to start cooking,

11. Manual Preset Program Cook Mode

In this mode, you can specify the cooking time and power level.

(1) If you have set the user option "OP:81" mode, open the door and press "1" pad for 5 seconds, the buzzer will sound once and enter to this mode.

(2) "PROGRAM" displays on the screen.

(3) Press the number key “0-999” to select a preset program.

(4) The screen will display preset time and power level. Press number keys to set a new cooking time. The maximum time is 60 minutes.

(5) Press “POWER LEVEL” and press number keys to set a new power level.

(6) Press “ START ” to save.

Note:

(1) The saved program does not disappear after electricity is off.

(2) If you press “ STOP ” at the last satge, it will turn back to Ready Mode. The setting is invalid.

12. Double/ Triple Quantity Cooking

(1) In Ready Mode, press “X2” or “X3”, the screen will display “DOUBLE” or “TRIPLE”. Press number keys to start the corresponding quantity cooking time. For example, if the preset cooking time for 5 number key is 5 minutes, then it will change to 10 minutes if “X2” is pressed.

Note: This function is only available for Preset Program Cook Mode.

13. User Option Mode

(1) Open the oven door and press “2” number key for 5 seconds. The buzzer sounds once and enter this mode.

(2) The screen will display “OP:--”.

(3) Press number keys to enter related mode setting. (See the appendix A)

(4) Press “ START ” to save.

14. Filter Cleaning Function

(1) If User Option OP:01 is selected and the setting time arrives, the oven will remind you to cleaning the filter.

Note: The oven must be electrified.

(2) The screen will display "CLEAN FILTER". At this time, opening the door will enter Ready Mode.

(3) If you do not need to clean the filter , press " STOP " button and hold for 3 seconds.

15. Multi-Stage Cooking

You can set this mode in manual preset program cook mode or manual cook entry mode.

(1) Three stages can be set. After setting the power level and time for the first stage, press "TIME ENTRY" and then press number keys to set the time. Then press "POWER LEVEL" and the press number keys to set the power level for the second stage. The third stage is same operation.

(2) Press " START " to start cooking.

Example: In manual preset program cook mode, press number key "3" to set two stages The first stage is 70% and time is 1 minute 25 seconds. The second stage is 50% and 5 minutes and 40 seconds. The steps are follow.

a. Open the door, press number key "1" for 5 seconds. "PROGRAM" displays.

b. Press number button "3", the screen will display "P:03". After two seconds, the screen will display the related time " :30 ".

c. Press "1", "2", "5" to input the cooking time. "1:25" displays.

d. Press "POWER LEVEL" then press " 7 ".
The first stage is finished.

e. Press " TIME ENTRY ", "STAGE-2" displays.

f. Press "5", "4", "0" key, "5:40" displays.

g. Press "POWER LEVEL" then press "5".
The second stage is finished.

h. Press " START " button to start cooking.

16. Factory- default setting

(1) In Ready Mode, press " START " + " 0 ", the screen will display "CHECK".

(2) If it is in the factory-default setting, the screen will display "11". If it is not in the factory-default setting, the screen will display "00".

(3) Press " START " to enter factory-default setting. "CLEAR" will display.

Filter cleaning

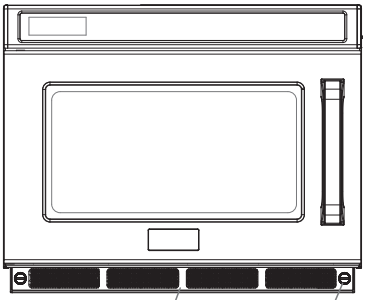

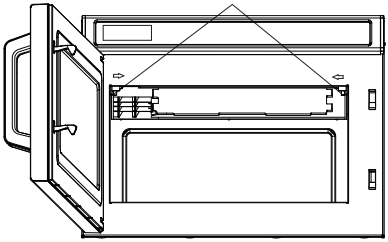

Caution! Make sure the splash shield is installed correctly before use of the microwave oven!

The front filter serves as the air inlet; the filter should be cleaned on time to keep the chamber clean.

1. Turn counterclockwise to unscrew and take down the filter ; and wash it with warm soap water;
2. Install the filter screen. Tighten clockwise the screws to fix the filter ;
3. Make sure the filter is installed before use of the microwave oven;
4. The factory setting has the function to remind the user of washing the filter every 30 days.

Splash shield cleaning:

1. Detaching: Hold the two buckle positions in front of the splash shield with your hands (as shown by the arrows). Exert your strength following the direction of the arrows and pull downwards after you have pulled out the buckles:

2. Wash the splash shield:

3. Installation: Pick up the splash shield and obliquely put it into the chamber in the way that insert the first pin at the rear into the positioning hole on the rear plate of chamber, then push the other side to insert all positioning pins into their positioning holes.

Installation (supplement)

1. The switching operation of this microwave oven can cause voltage fluctuations on the supply line. The operation of this oven under unfavorable voltage supply conditions can have adverse effects. This device is intended for the connection to a power supply system with a maximum permissible system impedance Zmax of **0. 3Ohms** at the interface point of the user's supply. The user has to ensure that this device is connected only to a power supply system which fulfills the requirement above. If necessary, the user can ask the public power supply company for the system impedance at the interface point.

2. If there is no equipotential bonding conductor in the electric supply, an external equipotential bonding conductor must be installed at the rear of the appliance (see symbol). This terminal shall be in effective electrical contact with all
fixed exposed metal parts and shall allow the connection of a conductor having a nominal cross-sectional area up to 10 mm².

Symbol for the external connection of equipotential bonding conductors.

MAINTENANCE

Troubleshooting

Check your problem by using the chart below and try the solutions for each problem. If the microwave oven still does not work properly, contact the nearest authorized service center.

TROUBLE	POSSIBLE CAUSE	POSSIBLE REMEDY
Oven will not start	a. Electrical cord for oven is not plugged in. b. Door is open. c. Wrong operation is set.	a. Plug into the outlet. b. Close the door and try again. c. Check instructions.
Arcing or sparking	a. Materials to be avoided in microwave oven were used. b. The oven is operated when empty. c. Spilled food remains in the cavity.	a. Use microwave-safe cookware only. b. Do not operate with oven empty. c. Clean cavity with wet towel.
Unevenly cooked foods	a. Materials to be avoided in microwave oven were used. b. Food is not defrosted completely. c. Cooking time, power level is not suitable. d. Food is not turned or stirred.	a. Use microwave-safe cookware only. b. Completely defrost food. c. Use correct cooking time, power level. d. Turn or stir food.
Overcooked foods	Cooking time, power level is not suitable.	Use correct cooking time, power level.
Undercooked foods	a. Materials to be avoided in microwave oven were used. b. Food is not defrosted completely. c. Oven ventilation ports are restricted. d. Cooking time, power level is not suitable.	a. Use microwave-safe cookware only. b. Completely defrost food. c. Check to see that oven ventilation ports are not restricted. d. Use correct cooking time, power level.
Improper defrosting	a. Materials to be avoided in microwave oven were used. b. Cooking time, power level is not suitable. c. Food is not turned or stirred.	a. Use microwave-safe cookware only. b. Use correct cooking time, power level. c. Turn or stir food.