Installers & User guide **Keybox**

igloohome

Version 0.1 08/19

Welcome!

This guide will get you up and running with your igloohome Keybox In the meantime, you should follow igloohome on Facebook and Youtube!

Like us on Facebook

Visit our Youtube

As our igloohome app is frequently updated, there may be changes to this manual. Please refer to our website igloohome.co/support for the latest version of the manual.

Table of Contents

What's Included	4
Specifications	5
Features	6
Preparing the Lock	8
App Onboarding	9
Unlocking	10
Locking	11
Lock Installation	12
Lock Behaviour	14
Managing Access in App	16
USB-C Jumpstart	17
Audio and LED Indicators	18
Troubleshoot	19

What’s Included

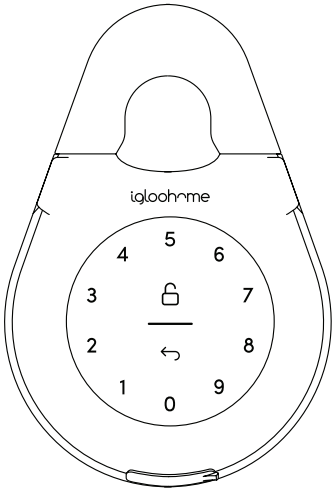

Keybox 3

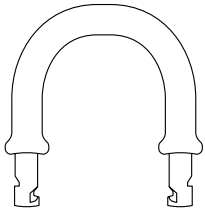

Slim Shackle

Mounting Seal Rings x2

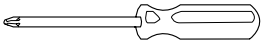

Screwdriver

Mounting Screws x2

Screws Anchors x2

Specifications

Model	IGK3
Battery Type	4 x AAA Alkaline Batteries
Battery Life	Up to 12 months
Emergency Power	USB-C Jumpstart
Operation Temp	-20°C to 50°C
IP Rating	IP65
Body Material	Zinc Alloy, Aluminium Alloy, Acrylic
Shackle Material	Hardened Steel, Rubber
Weight	Net: 1kg, Gross: 1.3kg
Unlock Mechanism	Bluetooth, PIN code

Front

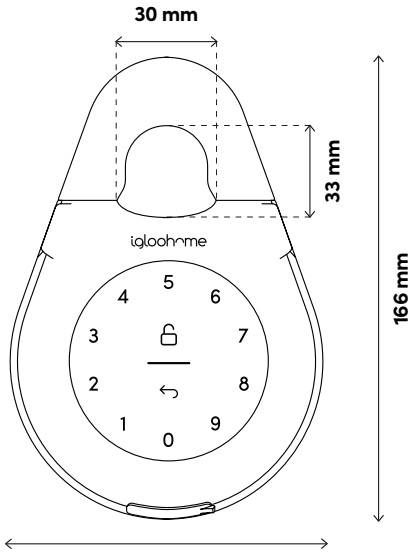

Thickness: 53mm

Front (Opened)

Storage Depth : 27 mm

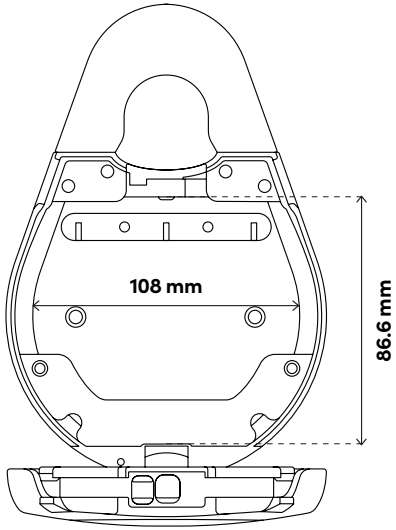

* **DO NOT USE:** Heavy Duty, Eveready, GP, or rechargeable batteries. Duracell & Energizer alkaline batteries recommended. Please note that using better batteries will improve the performance and lifespan of the lock.

Features

PIN / Bluetooth Unlock

Master PIN Code

The igloohome Keybox 3 unlocks with a permanent Master PIN Code.

Bluetooth Master Key

The igloohome Keybox 3 unlocks with Bluetooth via the app.

User PIN Code

The igloohome mobile app can generate multiple types of User Pin codes, e.g. One-Time, Permanent & Duration.

Bluetooth Guest Key

The igloohome mobile app can generate and share Bluetooth keys based on duration with guests to unlock the Keybox 3.

Battery

Battery Life

The Keybox 3 can last up to 12 months with 4 AAA Alkaline battery.

Emergency Jump Start

If battery power is drained, connect a USB-A to USB-C cable to a power bank then plug it onto the USB-C jumpstart port on the keybox to provide emergency power.

Low Battery Indicator

The Status Indicator shows red light when battery level is 20% and below, followed by a sound alert when the keypad is woken up. The battery level can also be monitored on the app and is updated during Bluetooth Unlock.

Features

Security

Keypad Security Lockout

Lock will dissallow any PIN entries and sound an alarm when there is a number of incorrect PIN attempt. User can configure number of incorrect attempts to trigger timeout.

Masking Security Code

A total of 16 digits including the masking digits can be entered to prevent the PIN code from being exposed.

Auto Relock

The Keybox 3 relocks automatically when product is closed. User can deactivate auto-relock function if they prefer manual relock.

Weather Resistant

The Keybox 3 is able to withstand weather conditions with protection against dust and water (IP66).

Quick Start Guide

1 **Loosen the 2 screws and remove battery cover**

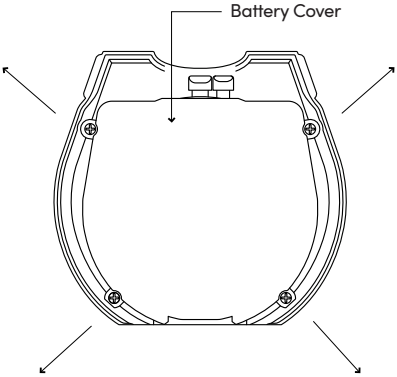

2 **Insert AAA Batteries**

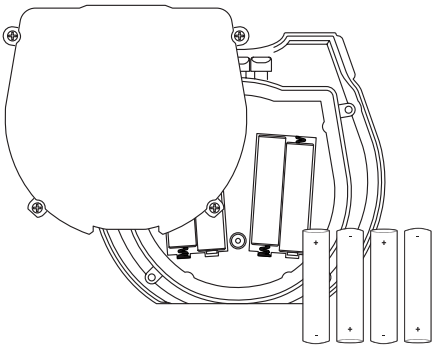

3 **Secure battery cover tightly with 4 screws**

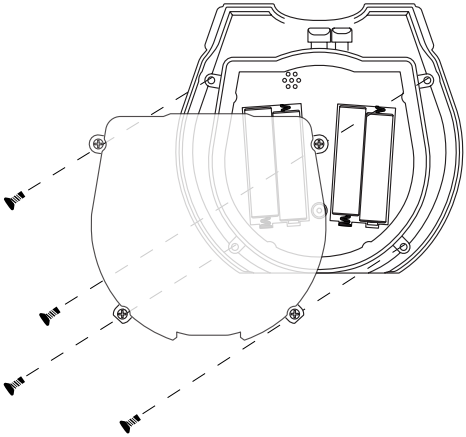

App Onboarding

1 Test Factory PIN Unlock

In the factory mode (before pairing), the PIN to unlock the lock is **1 2 3 4 5 6 7 8 9 0** 🔓

2 Register as a Lock User

a) Download igloohome from the App Store / Play Store

b) Create an account and login

3 Pairing

a) Select **[Add new igloohome lock]**

Note: For existing users with other paired locks, go to **[Configuration]**, select **[Add Locks]** and follow the instructions.

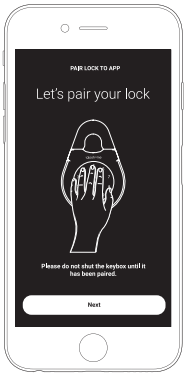

4 Setting Master PIN Code

Before proceeding, turn on your Bluetooth and ensure that you are within Bluetooth range of the lock.

Go to **[Access]** and customize your **[Master PIN]** by editing it.

Unlocking

a Bluetooth Unlock

1. Open your igloohome app
2. Tap on the “Bluetooth Unlock” button
3. The status indicator will flash green twice with 4 short ascending tone once unlocked.

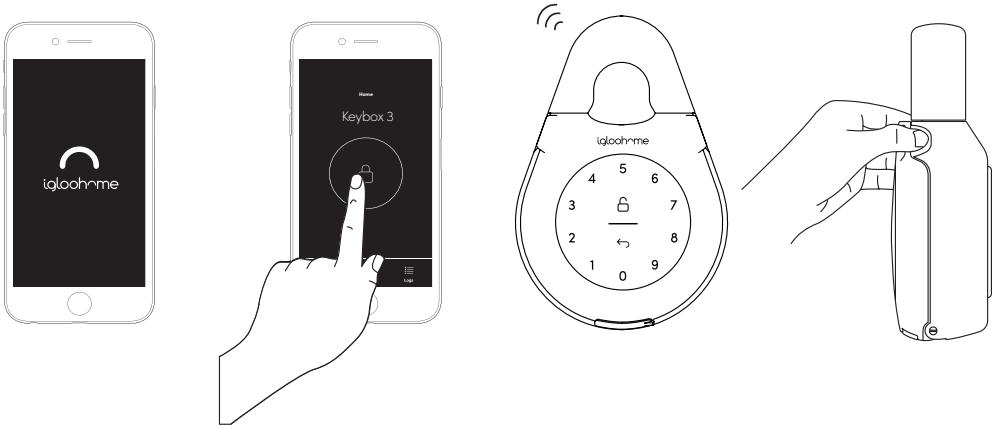

b PIN Code

1. Press any button on the keypad to wake device up
2. Key in a valid PIN code (with or without masking pins) followed by the “Unlock Icon”
3. The status indicator will flash green twice with 4 short ascending tone once unlocked.

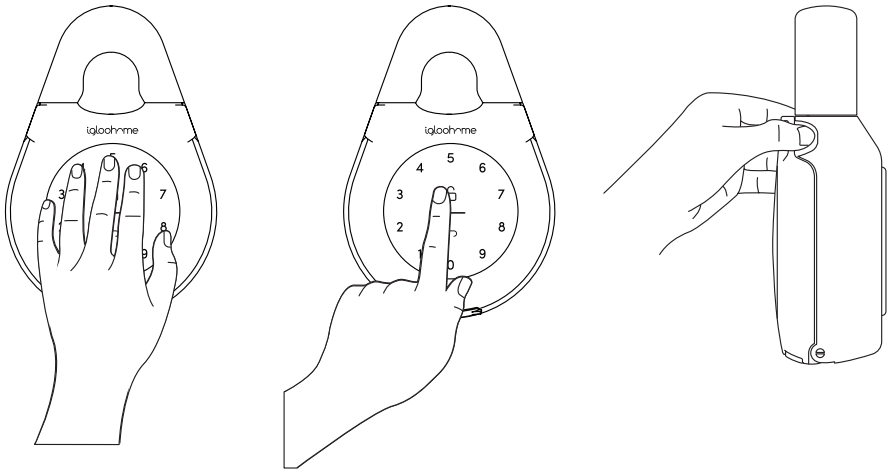

Locking

a Auto Relock

Simple close the keybox in place and Status Indicator will show green with a long beep.

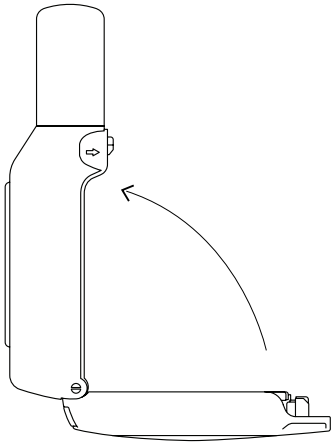

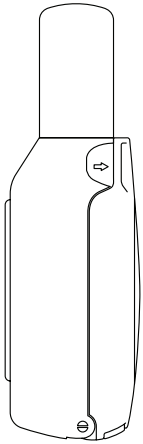

b Manual Relock

Press and hold the Unlock icon on the bottom right of the keypad for 2 seconds until the status indicator will show green with a long beep.

Note: Used when Auto Relock is "Off"

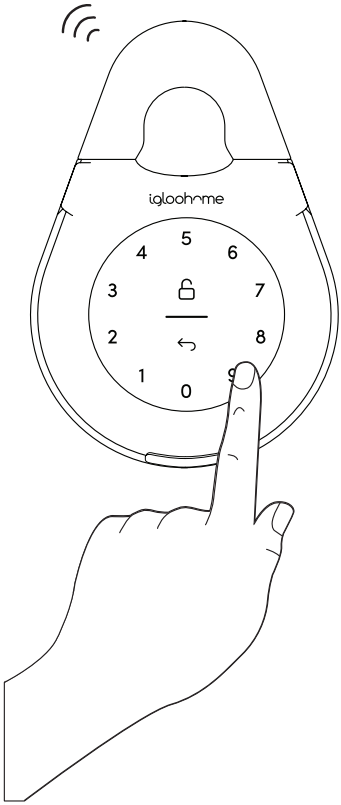

Lock Installation

a **Secure Keybox on a handle or knob**

1. Unlock the keybox
2. Push the shackle release to the right
3. Pull out the shackle
4. Secure on a handle or knob
5. Insert back the shackle

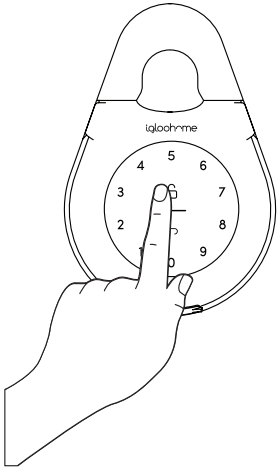

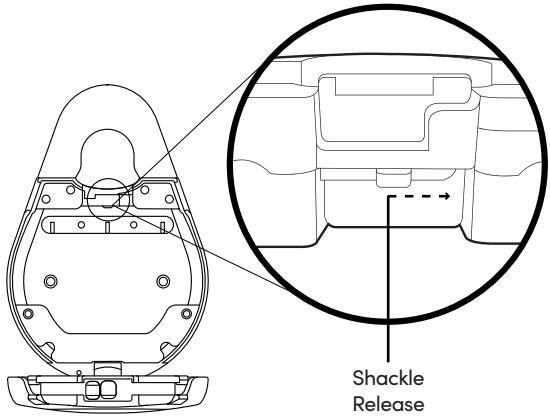

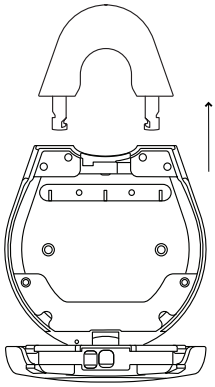

For door handles,
use Regular Shackle

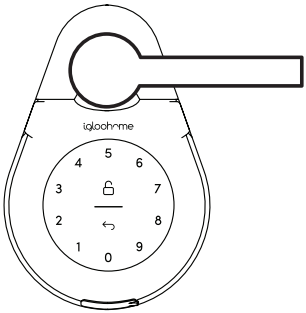

For door knobs,
use Slim Shackle

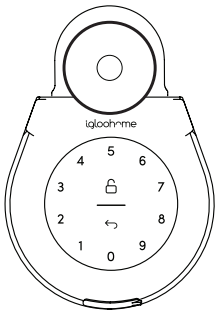

b Mount on a surface

1. Unlock the keybox
2. Drill holes on a wall
3. Hammer the screw anchors into the holes
4. Mount the Keybox 3 on the wall with the mounting seal rings and 2 screws

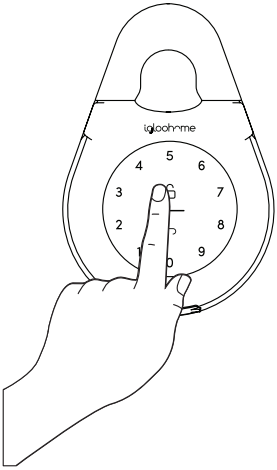

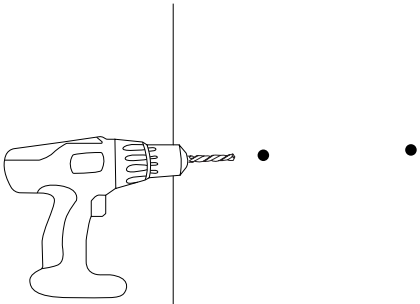

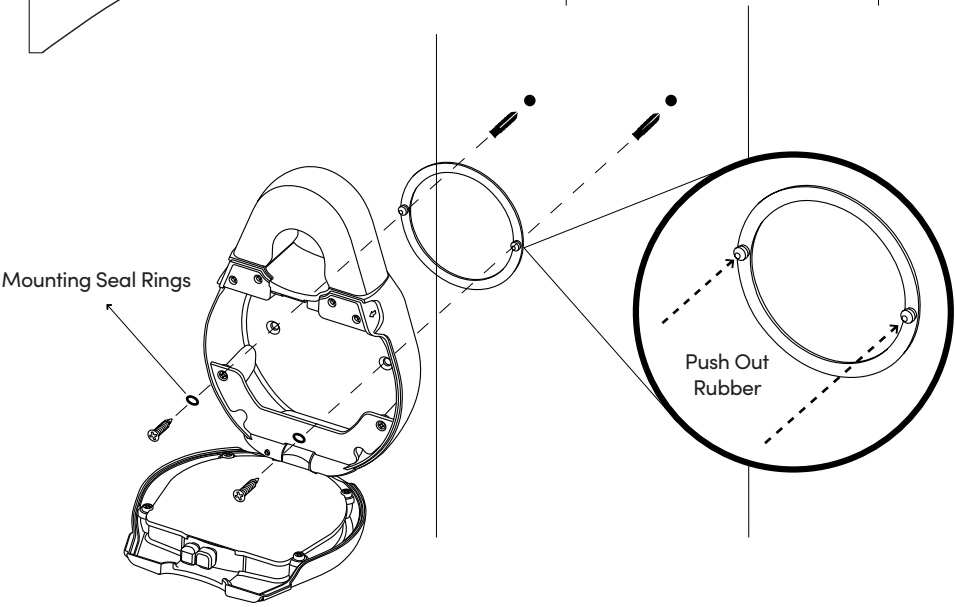

Lock Behaviour

Note: User is able to Enable and Disable Keypad Security Lockout via Bluetooth.

	Keypad Security Lockout
Triggered by	5 consecutive PIN Code attempts by default (Configurable via Bluetooth)
Disable By	After 1 / 5 / 10 Minutes or Master / Guest Bluetooth Unlock
Behaviour	Single flash White LED on keypad and Red LED on status indicator when keypad is triggered.
Duration	Please refer to table below.

Lock Behaviour

Note: User is able to Enable and Disable Keypad Security Lockout via Bluetooth.

Triggered	Security Alarm	Keypad Lockout
1st Time	30 Sec	1 Min
2nd Time	60 Sec	5 Min
3rd and Consecutive Time	90 Sec	10 Min

Managing Access in App

1 Creating PIN codes

PIN codes can be generated on the app under **[Access]**, press **[New Key]** and choose either One-Time, Permanent or Duration PIN.

Pin codes will expire if its not use within its activation period. Refer to the table below.

PIN Type	Use PIN within*
Permanent PIN	24 hrs of generation
One-Time PIN	24hrs of generation
Duration PIN	24hrs from the start time

Note: Duration PIN code end times can be customised within a 28-day timeframe. Past this timeframe, the end time will automatically be configured to the start time.

2 Bluetooth Guest Key

Bluetooth Guest Key can be shared with other users for mobile access. It allows your guests to unlock the igloohome smart lock via Bluetooth.

There are 3 steps to using a Shared Bluetooth Key

1. Under **[Access]**, press **[New Key]** and choose **[Bluetooth Key]** under **[Access Type]**. Proceed to share the key after it is created.

2. Guest receives the Bluetooth Key by one of these methods:
   - Clicking the URL given and follow the instructions.
   - Claiming Bluetooth Key under **[Configuration]**.

3. Guest can now use the Bluetooth Key under the Guest Bluetooth Key Section whenever he/she is within range of the lock.

Notes:
- The owner can revoke the Bluetooth Key in App.
- Bluetooth Key must be accepted within 1 hour generation before it expires.

USB-C Jumstart

1 USB-C Jumpstart Feature

1. Connect the USB-A to USB-C cable to a power bank then plug it onto the USB-C jumpstart port on the keybox.

2. While the USB-A to USB-C cable is connected to the power bank, key in PIN code on the keypad followed by 🔓 to unlock.

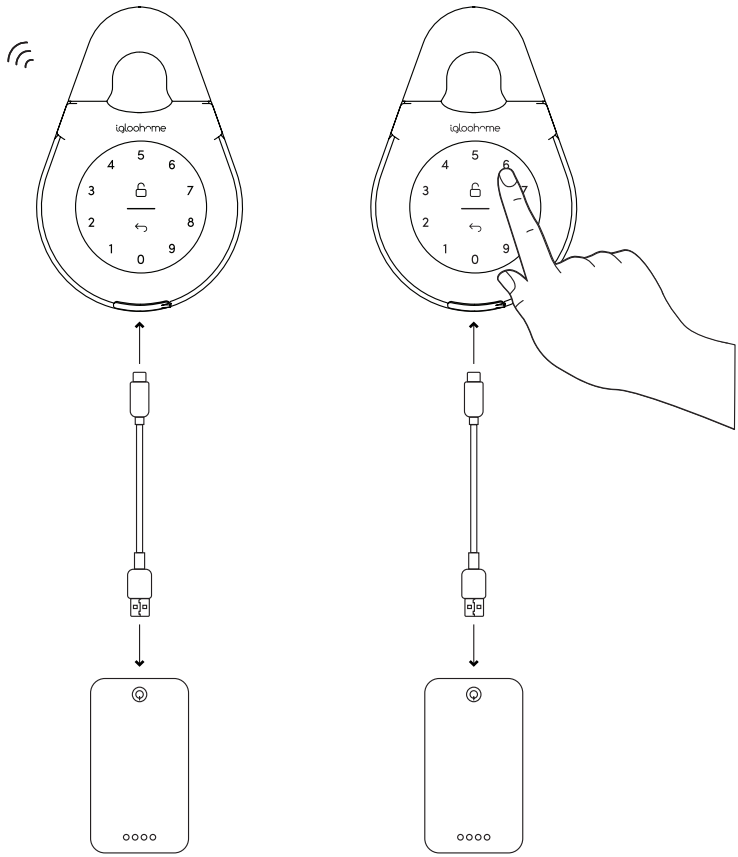

Audio and LED indications

Actions	Indications
Bluetooth Connection	Status indicator flashes Blue
Successfully Unlocked	Ascending 4 fast tones after unlocked and flash Green LED 2 times
Successfully Locked	1 long beep after Padlock is locked and Green LED for 2 seconds
Incorrect PIN	4 short beeps and flash Red 2 times
Deleted PIN	3 sets of 4 short beeps and flash Red 2 times
Obstruction Alarm	6 sets of 4 short beeps
Security Lockout Alarm	Low – High siren for 30 / 60 / 90 seconds
Security Lockout Deactivated	2 long beeps
Low Battery Alert	Descending 3 fast tones when keypad is woken up and breathing Red LED
Hard Reset / Unpair	Descending 4 slow tones
Power Start Up	2 slow beeps then 2 quick beeps

FCC Warning Statement

Changes or modifications not expressly approved by the party responsible for compliance could void the user's authority to operate the equipment. This equipment has been tested and found to comply with the limits for a Class B digital device, pursuant to Part 15 of the FCC Rules. These limits are designed to provide reasonable protection against harmful interference in a residential installation. This equipment generates uses and can radiate radio frequency energy and, if not installed and used in accordance with the instructions, may cause harmful interference to radio communications. However, there is no guarantee that interference will not occur in a particular installation. If this equipment does cause harmful interference to radio or television reception, which can be determined by turning the equipment off and on, the user is encouraged to try to correct the interference by one or more of the following measures:

- - Reorient or relocate the receiving antenna.
- - Increase the separation between the equipment and receiver.
- - Connect the equipment into an outlet on a circuit different from that to which the receiver is connected.
- - Consult the dealer or an experienced radio/TV technician for help.

This device complies with part 15 of the FCC Rules. Operation is subject to the following
two conditions: (1) This device may not cause harmful interference, and
(2) this device must accept any interference received, including interference that may cause undesired operation.

RF Exposure Statement

To maintain compliance with FCC's RF Exposure guidelines, This equipment should be installed and operated with minimum distance of 20Cm the radiator your body. This device and its antenna(s) must not be co-located or operation in conjunction with any other antenna or transmitter

For enquiries go to:
igloohome.co/support