User Manual

V1.0

2016.3.15

Table Of Contents

1. **Preambles** 3

1.1. Features 4

1.2. Parameters 5

2. Pin Descriptions 6

2.1. Interfaces 7

2.2. Pin Mode 9

3. Packaging and Dimension 9

3.1. Packaging 10

3.2. Soldering temperature 10

4. Absolute Maximum Ratings 11

4.1Recommended Operating Conditions 11

4.2.AT commend Testing 12

4.3.AT commend 12

4.3.1.AT Command Description 12

4.3.2.Basic AT Command Set 13

5.Notes 18

1. **Preambles**

ESP-07S WiFi module is developed by Wireless-tagCo.,Ltd, core processor ESP8266 in smaller sizes of the module encapsulates Tensilica L106 integrates industry-leading ultra low power 32-bit MCU micro, with the 16-bit short mode, clock speed support 80 MHz, 160 MHz, supports the RTOS, integrated Wi-Fi MAC/BB/RF/PA/LNA, on-board antennas.

The module supports standard IEEE802.11 b/g/n agreement, complete TCP/IP protocol stack. Users can use the add modules to an existing device networking, or building a separate network controller.

ESP8266 is high integration wireless SOCs, designed for space and power constrained mobile platform designers. It provides unsurpassed ability to embed Wi-Fi capabilities within other systems, or to function as a standalone application, with the lowest cost, and minimal space requirement.

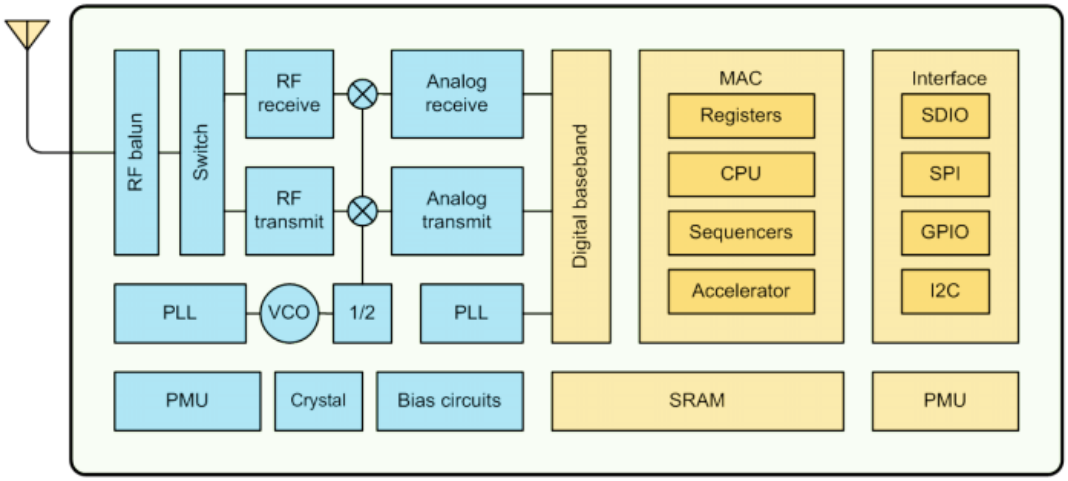

Figure 1 ESP8266EX Functional Block Diagram

ESP8266EX offers a complete and self-contained Wi-Fi networking solution; it can be used to host the application or to offload Wi-Fi networking functions from another application processor.

When ESP8266EX hosts the application, it boots up directly from an external flash. In has integrated cache to improve the performance of the system in such applications.

Alternately, serving as a Wi-Fi adapter, wireless internet access can be added to any micro controllerbased design with simple connectivity (SPI/SDIO or I2C/UART interface).

ESP8266EX is among the most integrated WiFi chip in the industry; it integrates the antenna switches, RF balun, power amplifier, low noise receive amplifier, filters, power management modules, it requires minimal external circuitry, and the entire solution, including front-end module, is designed to occupy minimal PCB area.

ESP8266EX also integrates an enhanced version of Tensilica's L106 Diamond series 32-bit processor, with on-chip SRAM, besides the Wi-Fi functionalities. ESP8266EX is often integrated with external sensors and other application specific devices through its GPIOs; codes for such applications are provided in examples in the SDK.

1.1. Features

- 802.11 b/g/n
- Integrated low power 32-bit MCU
- Integrated 10-bit ADC
- Integrated TCP/IP protocol stack
- Integrated TR switch, balun, LNA, power amplifier and matching network
- Integrated PLL, regulators, and power management units
- Supports antenna diversity
- Wi-Fi 2.4 GHz, support WPA/WPA2
- Support STA/AP/STA+AP operation modes
- Support Smart Link Function for both Android and iOS devices
- SDIO 2.0, (H) SPI, UART, I2C, I2S, IRDA, PWM, GPIO
- STBC, 1x1 MIMO, 2x1 MIMO
- A-MPDU & A-MSDU aggregation and 0.4s guard interval
- Deep sleep power <10uA, Power down leakage current < 5uA
- Wake up and transmit packets in < 2ms
- Standby power consumption of < 1.0mW (DTIM3)

- +20dBm output power in 802.11b mode
- Operating temperature range -40C ~ 85C
- Comply with FCC rules part 15 subpart C requirements

1.2. Parameters

Table 1 below describes the major parameters.

Table 1 Parameters

Categories	Items	Values
WiFi Paramters	WiFi Protocles	802.11 b/g/n
	Frequency Range	2.4GHz-2.5GHz (2400M-2483.5M)
Hardware Paramaters	Peripheral Bus	UART/HSPI/I2C/I2S/Ir Remote Contorl
		GPIO/PWM
	Operating Voltage	3.0~3.6V
	Operating Current	Average value: 80mA
	Operating Temperature Range	-40°~125°
	Ambient Temperature Range	Normal temperature
	Package Size	18mm*20mm*3mm
	External Interface	N/A
Software Parameters	Wi-Fi mode	station/softAP/SoftAP+station
	Security	WPA/WPA2
	Encryption	WEP/TKIP/AES
	Firmware Upgrade	UART Download / OTA (via network) / download and write firmware via host
	Ssoftware Development	Supports Cloud Server Development / SDK for custom firmware development
	Network Protocols	IPv4, TCP/UDP/HTTP/FTP

	User Configuration	AT Instruction Set, Cloud Server, Android/iOS APP

2. Pin Descriptions

There are altogether 16 pin counts, the definitions of which are described in Table 2 below.

Figure 2 ESP-07S pinout

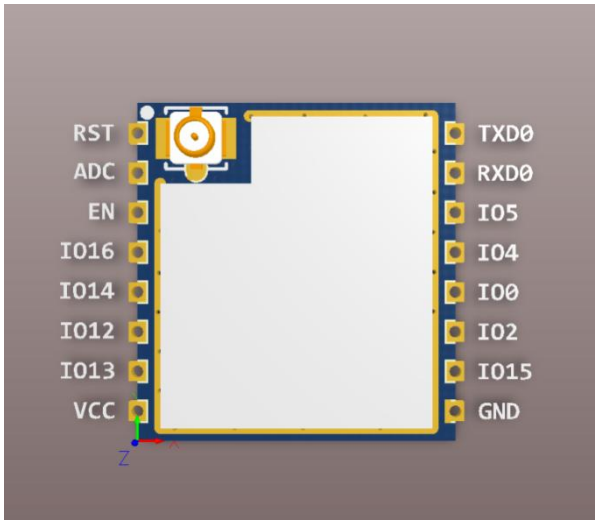

Table 2 ESP-07S pin description

Pin number	**Pin** name	function
1	RST	Reset module
2	ADC	A/d conversion result. Input voltage range 0~1V, value range: 0~1024
3	EN	Chip enable pin. Active high
4	GPIO16	GPIO16; can be used to wake up the chipset from deep sleep mode
5	GPIO14	GPIO14; HSPI_CLK
6	GPIO12	GPIO12; HSPI_MISO

7	GPIO13	GPIO13; HSPI_MOSI; UART0_CTS
8	VCC	3.3V power supply (VDD)
9	GND	GND
10	GPIO15	GPIO15; MTDO; HSPICS; UART0_RTS
11	GPIO2	GPIO2; UART1_TXD
12	GPIO0	GPIO0
13	GPIO4	GPIO4
14	GPIO5	GPIO5
15	RXD0	UART0_RXD; GPIO3
16	TXD0	UART0_TXD; GPIO1

2.1. Interfaces

Table 3 Descriptions of Interfaces

Interface	Pin Name	Description
HSPI	IO12(MISO), IO13(MOSI) IO14(CLK), IO15(CS)	SPI Flash , display screen, and MCU can be connected using HSPI interface
PWM	IO12(R), IO15(G), IO13(B)	Currently the PWM interface has four channels, but users can extend the channels according to their own needs. PWM interface can be used to control LED lights, buzzers, relays, electronic machines, and so on.
IR Remote Control	IO14(IR_T), IO5(IR_R)	The functionality of Infrared remote control interface can be implemented via software programming. NEC coding, modulation, and demodulation are used by this interface. The frequency of modulated carrier signal is 38KHz.

ADC	TOUT	ESP8266EX integrates a 10-bit analog ADC. It can be used to test the power supply voltage of VDD3P3 (Pin3 and Pin4) and the input power voltage of TOUT (Pin 6). However, these two functions cannot be used simultaneously. This interface is typically used in sensor products.
I2C	IO14(SCL), IO2(SDA)	I2C interface can be used to connect external sensor products and display screens, etc.
UART	UART0: TXD(U0TXD), RXD(U0RXD), IO15(RTS), IO13(CTS) UART1: IO2(TXD)	Devices with UART interfaces can be connected with the module. Downloading: U0TXD+U0RXD or GPIO2+U0RXD Communicating: UART0: U0TXD, U0RXD, MTDO (U0RTS), MTCK (U0CTS) Debugging: UART1_TXD (GPIO2) can be used to print debugging information.
		By default, UART0 will output some printed information when the device is powered on and is booting up. If this issue exerts influence on some specific applications, users can exchange the inner pins of UART when initializing, that is to say, exchange U0TXD, U0RXD with U0RTS, U0CTS.
I2S	I2S Input： IO12 (I2SI_DATA) ; IO13 (I2SI_BCK); IO14 (I2SI_WS);	I2S interface is mainly used for collecting, processing, and transmission of audio data.
	I2S Output: ： IO15 (I2SO_BCK); IO3 (I2SO_DATA); IO2 (I2SO_WS).	

2.2. Pin Mode

Table 4 Pin Mode

Mode	GPIO15	GPIO0	GPIO2
UART	low	low	high
Flash Boot	low	high	high

3. Packaging and Dimension

The external size of the module is 16mm*17mm*3mm, as is illustrated in Figure 4 below. The type of flash integrated in this module is an SPI flash, the capacity of which is 4 MB, and the package size of which is SOP8 208mil. Modules by IPEX interface to connect to an external antenna.

Figure 3 Top View of ESP-07S WiFi Module

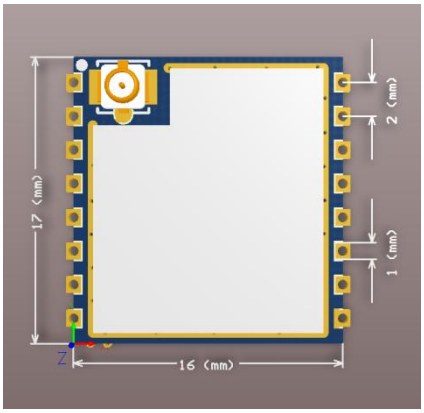

Table 5 Dimension of ESP-07S WiFi Module

Length	width	Height	PAD Size(Bottom)	Pin Pitch
16mm	17mm	3 mm	1 mm x 1.2 mm	2mm

3.1. Packaging

ESP-07S a half hole patch package, PCB LAYOUT shown in the following figure:

Figure 5 RECOMMENDED PCB LAYOUT

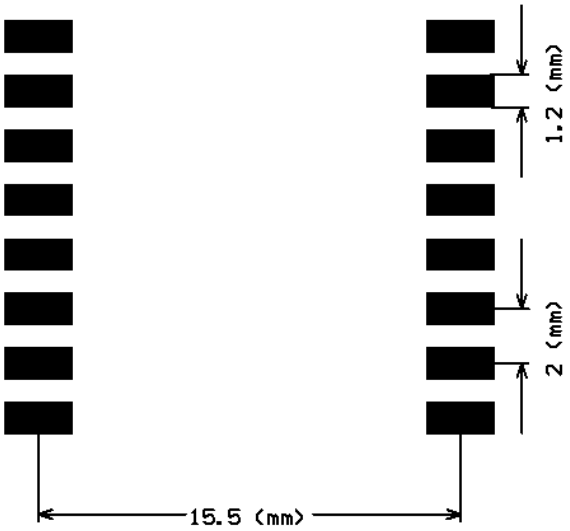

3.2. Soldering temperature

Note When welding module temperature not higher, recommended reflow curve shown in the following figure:

Figure 6 Recommended reflow soldering curves

Refer to IPC/JEDEC standard：Peak Temperature : <250°C； Number of Times: ≤2 times；

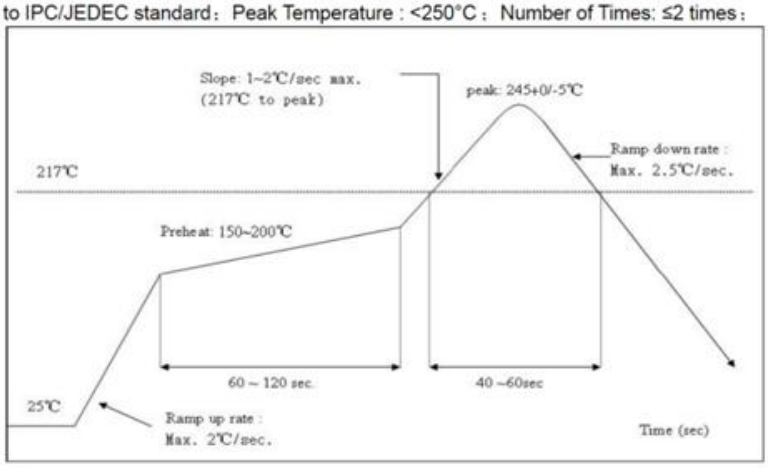

4. Absolute Maximum Ratings

Table 6 Absolute Maximum Ratings

Rating	Condition	Value	Unit
Storage Temperature		-40 to 125	℃
Maximum Soldering Temperature		260	℃
Supply Voltage	IPC/JEDEC J-STD-020	+3.0 to +3.6	V

4.1Recommended Operating Conditions

Table 7 Recommended Operating Conditions

Operating Condition	Symbol	Min	Typ	Max	Unit
Operating Temperature		-40	20	125	℃
Supply voltage	VDD	3.0	3.3	3.6	V

4.2.AT commend Testing

1.Hardware connection

As shown in Figure 7, ESP-07S via a serial port or USB serial port carriers connected to the computer, software tool through the serial port on the computer can be AT instruction test

Figure 7 ESP-07S connect with computer

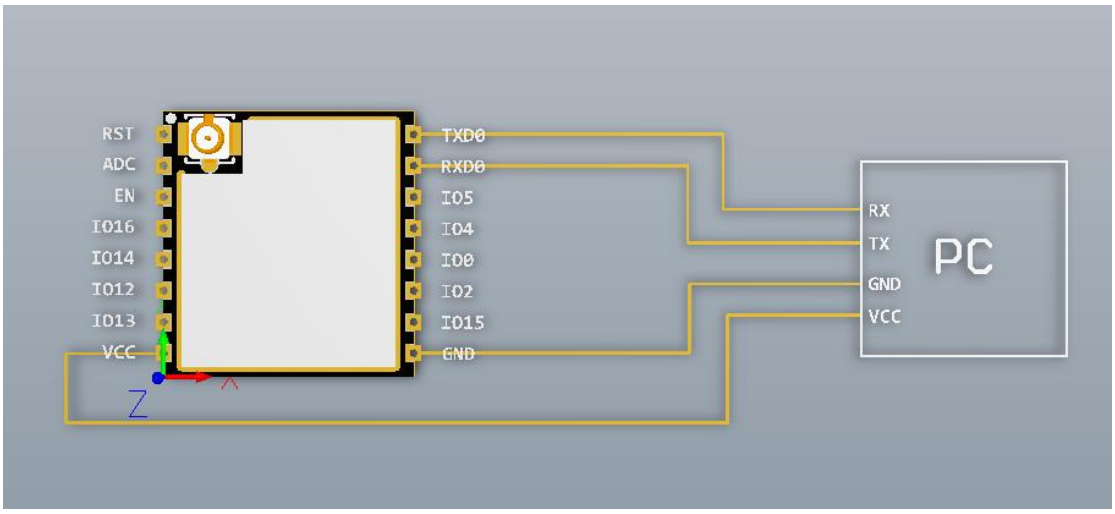

4.3.AT commend

Espressif AT instruction set functions and methods of use

AT commands set is divided into: Basic AT commands, WiFi related AT commands, TCP / IP AT

4.3.1.AT **Command Description**

Table 8 Each Command set contains four types of AT commands.

Type	Command Format	DescrIPtion
Test	AT+<x>=?	Query the Set command or internal parameters and its range values.
Query	AT+<x>?	Returns the current value of the parameter.
Set	AT+<x>=<...>	Set the value of user-defined parameters in commands and run.
Execute	AT+<x>	Runs commands with no user-defined parameters.

Notes:

1. Not all AT Command has four commands.
2. [] = default value, not required or may not appear
3. String values require double quotation marks, for example:
AT+CWSAP="ESP756290","21030826",1,4
4. Baudrate = 115200
5. AT Commands has to be capitalized, and end with "/r/n"

4.3.2.Basic AT Command Set

The ESP8266 wireless WiFi modules can be driven via the serial interface using the standard AT commands. Here is a list of some basic AT commands that can be used.

Table9 basic AT commands

Basic	
Command	**Description**
AT	Test AT startup
AT+RST	Restart module
AT+GMR	View version info
AT+GSLP	Enter deep-sleep mode
ATE	AT commands echo or not
AT+RESTORE	Factory Reset
AT+UART	UART configuration, [@deprecated]
AT+UART_CUR	UART current configuration
AT+UART_DEF	UART default configuration, save to flash
AT+SLEEP	Sleep mode
AT+RFPOWER	Set maximum value of RF TX Power
AT+RFVDD	Set RF TX Power according to VDD33

AT – Test AT startup

The type of this command is "executed". It's used to test the setup function of your wireless WiFi module.

AT - Test AT startup	
Response	OK
Parameters	null

AT+RST – Restart module

The type of this command is "executed". It’s used to restart the module.

AT+RST - Restart module	
Response	OK
Parameters	null

AT+GMR – View version info

This AT command is used to check the version of AT commands and SDK that you are using, the type of which is "executed".

AT+GMR - View version info	
Response	<AT version info> <SDK version info> <compile time> OK
Parameters	<AT version info> information about AT version <SDK version info> information about SDK version <compile time> time of the bin was compiled

AT+GSLP – Enter deep-sleep mode

This command is used to invoke the deep-sleep mode of the module, the type of which is "set". A minor adjustment has to be made before the module enter this deep sleep mode, i.e., connect XPD_DCDC with EXT_RSTB via **0R**.

AT+GSLP=<time>	
Response	<time> OK
Parameters	The time unit of <time> is ms. ESP8266 will wake up after deep sleep <time> ms.

ATE – AT commands echo

This command ATE is an AT trigger command echo. It means that entered commands can be echoed back to the sender when ATE command is used. Two parameters are possible. The command returns "OK" in normal cases and "ERROR" when a parameter other than 0 or 1 was specified.

ATE - AT commands echo	
Response	OK
Parameters	ATE0: Switch echo off ATE1: Switch echo on

AT+RESTORE – Factory reset

This command is used to reset all parameters saved in flash (according to appendix), restore the factory default settings of the module. The chip will be restarted when this command is executed.

AT+RESTORE - Factory reset	
Response	OK
Notes	Restore factory default settings. The chip will restart.

Detailed instruction test, please refer to the Esp8266 AT Instruction Set, can be downloaded to shun official website。

4.3.3 Antenna Specification

Antenna Size:

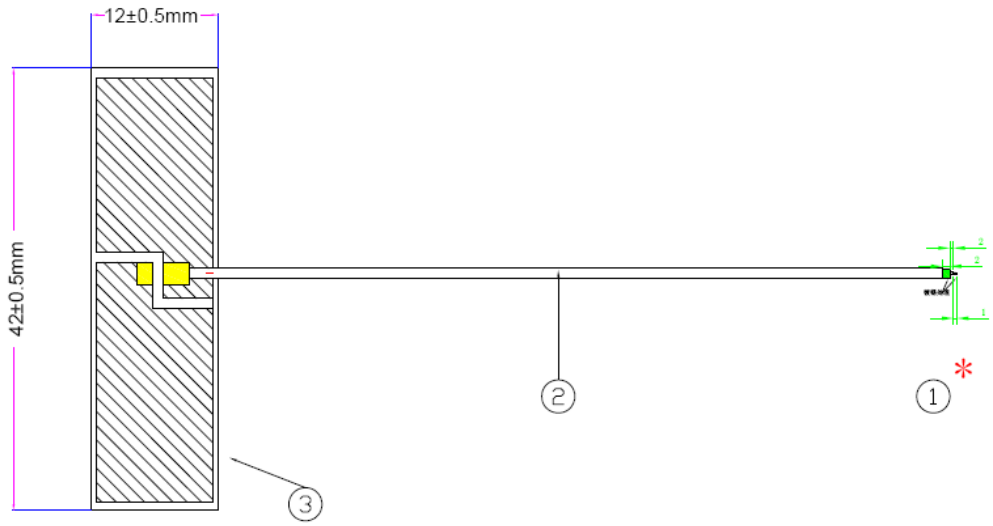

Antenna Gain:

A. Electrical Characteristics	
驻波比 S.W.R.	<= 2.0 @ 2400~2500 MHz
天线增益 Antenna Gain	2 ± 0.7 @ 2450 MHz E-Plan
天线增益 Antenna Gain	2± 0.7 @ 2450 MHz H-Plan
阻抗 Impedance	50 Ohm
辐射效率 Efficiency	60%
B. Material	
材质 Material of Radiator	FR-4
连接器类型 Connector Type	50 Ohm 焊接式尺寸：2-2-1mm For O.D.1.13 Cable
馈线长度范围 Cable Length	从焊点算 起 100 mm (Black)
C. Environmental	
Operation Temperature	- 30 ˚C ~ + 85 ˚C
Storage Temperature	- 30 ˚C ~ + 85 ˚C

5.Notes

This device complies with Part 15 of the FCC Rules. Operation is subject to the following two conditions: (1) this device may not cause harmful interference, and (2) this device must accept any interference received, including interference that may cause undesired operation.

changes or modifications not expressly approved by the party responsible for compliance could void the user's authority to operate the equipment.

Please notice that if the FCC identification number is not visible when the module is installed inside another device, then the outside of the device into which the module is installed must also display a label referring to the enclosed module. This exterior label can use wording such as the following: "Contains FCC ID: 2AUMD-ESP-07S" any similar wording that expresses the same meaning may be used.

This equipment complies with FCC radiation exposure limits set forth for an uncontrolled

environment. This equipment should be installed and operated with a minimum distance of 20cm

between the radiator & your body. This transmitter must not be co-located or operating in

conjunction with any other antenna or transmitter.

The module is limited to OEM installation ONLY.

The OEM integrator is responsible for ensuring that the end-user has no manual instruction to remove or install module.

The module is limited to installation in mobile application;

A separate approval is required for all other operating configurations, including portable configurations with respect to Part 2.1093 and difference antenna configurations.

There is requirement that the grantee provide guidance to the host manufacturer for compliance with Part 15B requirements.

The end user manual shall include all required regulatory information/warning as shown in this manual, include:
This product must be installed and operated with a minimum distance of 20 cm between the radiator and user body.