SAR Test Report

Report No.: AGC09128231101FH01

FCC ID	:	2AUMTRT22PRO
PRODUCT DESIGNATION	:	Two-Way Radio
BRAND NAME	:	Wanneton
MODEL NAME	:	M9, RT22pro, M9-2, M9-3, M9-4, M9-5, M9-6, M9-7, M9-8, M9-1
APPLICANT	:	Quanzhou Wanneton Electronic&Technology Co., Ltd
DATE OF ISSUE	:	Dec. 06, 2023
STANDARD(S)	:	IEEE Std. 1528:2013 FCC 47 CFR Part 2§2.1093 IEEE Std C95.1 ™-2005
REPORT VERSION	:	V1.0

Attestation of ***G***lobal ***C***ompliance(Shenzhen) Co., Ltd.

Any report having not been signed by authorized approver, or having been altered without authorization, or having not been stamped by the "Dedicated Testing/Inspection Stamp" is deemed to be invalid. Copying or excerpting portion of, or altering the content of the report is not permitted without the written authorization of AGC. The test results presented in the report apply only to the tested sample. Any objections to report issued by AGC should be submitted to AGC within 15days after the issuance of the test report. Further enquiry of validity or verification of the test report should be addressed to AGC by agc01@agccert.com.

Attestation of Global Compliance(Shenzhen)Co., Ltd
Attestation of Global Compliance(Shenzhen)Std & Tech Co., Ltd
Tel: +86-755 2523 4088 E-mail: agc@agccert.com Web: http://www.agccert.com/

Report Revise Record

Report Version	Revise Time	Issued Date	Valid Version	Notes
V1.0	/	Dec. 06, 2023	Valid	Initial Release

Any report having not been signed by authorized approver, or having been altered without authorization, or having not been stamped by the "Dedicated Testing/Inspection Stamp" is deemed to be invalid. Copying or excerpting portion of, or altering the content of the report is not permitted without the written authorization of AGC. The test results presented in the report apply only to the tested sample. Any objections to report issued by AGC should be submitted to AGC within 15days after the issuance of the test report. Further enquiry of validity or verification of the test report should be addressed to AGC by agc01@agccert.com.

Test Report

Applicant Name	Quanzhou Wanneton Electronic&Technology Co., Ltd
Applicant Address	No.2, Yangguang Road, Optoelectronic information-industry base, Xiamei Town, Nan'an, Quanzhou, China
Manufacturer Name	Quanzhou Wanneton Electronic&Technology Co., Ltd
Manufacturer Address	No.2, Yangguang Road, Optoelectronic information-industry base, Xiamei Town, Nan'an, Quanzhou, China
Factory Name	Quanzhou Wanneton Electronic&Technology Co., Ltd
Factory Address	No.2, Yangguang Road, Optoelectronic information-industry base, Xiamei Town, Nan'an, Quanzhou, China
Product Designation	Two-Way Radio
Brand Name	Wanneton
Model Name	M9
Series Model names	RT22pro, M9-2, M9-3, M9-4, M9-5, M9-6, M9-7, M9-8, M9-1
Different Description	Only different model names & cover designs
EUT Voltage	DC3.7 V
Applicable Standard	IEEE Std. 1528:2013 FCC 47 CFR Part 2§2.1093 IEEE Std C95.1 ™-2005
Date of receipt of test item	Nov. 24, 2023
Test Date	Nov. 28, 2023
Report Template	AGCRT- US -PTT/SAR (2021-04-20)

Note: The results of testing in this report apply to the product/system which was tested only.

Prepared By	Bibo Zhang (Project Engineer)	Nov. 28, 2023
Reviewed By	Calvin Liu (Reviewer)	Dec. 06, 2023
Approved By	Max Zhang (Authorized Officer)	Dec. 06, 2023

Any report having not been signed by authorized approver, or having been altered without authorization, or having not been stamped by the "Dedicated Testing/Inspection Stamp" is deemed to be invalid. Copying or excerpting portion of, or altering the content of the report is not permitted without the written authorization of AGC. The test results presented in the report apply only to the tested sample. Any objections to report issued by AGC should be submitted to AGC within 15days after the issuance of the test report. Further enquiry of validity or verification of the test report should be addressed to AGC by agc01@agccert.com.

TABLE OF CONTENTS

1. SUMMARY OF MAXIMUM SAR VALUE 5

2. GENERAL INFORMATION 6

2.1. EUT DESCRIPTION 6

3. SAR MEASUREMENT SYSTEM 7

3.1. THE DASY5 SYSTEM USED FOR PERFORMING COMPLIANCE TESTS CONSISTS OF FOLLOWING ITEMS 7
3.2. DASY5 E-FIELD PROBE 8
3.3. DATA ACQUISITION ELECTRONICS DESCRIPTION 8
3.4. ROBOT 9
3.5. LIGHT BEAM UNIT 9
3.6. DEVICE HOLDER 10
3.7. MEASUREMENT SERVER 10
3.8. PHANTOM 11

4. SAR MEASUREMENT PROCEDURE 12

4.1. SPECIFIC ABSORPTION RATE (SAR) 12
4.2. SAR MEASUREMENT PROCEDURE 13

5. TISSUE SIMULATING LIQUID 15

5.1. THE COMPOSITION OF THE TISSUE SIMULATING LIQUID 15
5.2. TISSUE DIELECTRIC PARAMETERS FOR HEAD AND BODY PHANTOMS 15
5.3. TISSUE CALIBRATION RESULT 16

6. SAR SYSTEM CHECK PROCEDURE 17

6.1. SAR SYSTEM CHECK PROCEDURES 17

7. EUT TEST POSITION 19

7.1. BODY WORN POSITION 19

8. SAR EXPOSURE LIMITS 20

9. TEST FACILITY 21

10. TEST EQUIPMENT LIST 22

11. MEASUREMENT UNCERTAINTY 23

12. POWER MEASUREMENT 27

13. TEST RESULTS 28

13.1. SAR TEST RESULTS SUMMARY 28

APPENDIX A. SAR SYSTEM CHECK DATA 31

APPENDIX B. SAR MEASUREMENT DATA 32

APPENDIX C. TEST SETUP PHOTOGRAPHS 34

APPENDIX D. CALIBRATION DATA 37

Any report having not been signed by authorized approver, or having been altered without authorization, or having not been stamped by the "Dedicated Testing/Inspection Stamp" is deemed to be invalid. Copying or excerpting portion of, or altering the content of the report is not permitted without the written authorization of AGC. The test results presented in the report apply only to the tested sample. Any objections to report issued by AGC should be submitted to AGC within 15days after the issuance of the test report. Further enquiry of validity or verification of the test report should be addressed to AGC by agc01@agccert.com.

1. SUMMARY OF MAXIMUM SAR VALUE

The maximum results of Specific Absorption Rate (SAR) found during testing for EUT are as follows:

Highest Report standalone SAR Summary (50% duty cycle)

Frequency Band	Type of signal	Separation	Highest Reported 1g-SAR(W/kg)	
			Face Up (with 25mm separation)	Back Touch with all accessories
450	Analog	12.5KHz	0.235	1.150

This device is compliance with Specific Absorption Rate (SAR) for Occupational / Controlled Exposure Environment limits (8.0W/kg) specified in 47 CFR part 2 (2.1093) and ANSI/IEEE C95.1, and had been tested in accordance with measurement methods and procedures specified in IEEE 1528-2013 and the following specific FCC Test Procedures:
KDB 447498 D01 General RF Exposure Guidance v06
KDB 865664 D01 SAR Measurement 100MHz to 6GHz v01r04
KDB 643646 D01 SAR Test for PTT Radios v01r03

Any report having not been signed by authorized approver, or having been altered without authorization, or having not been stamped by the "Dedicated Testing/Inspection Stamp" is deemed to be invalid. Copying or excerpting portion of, or altering the content of the report is not permitted without the written authorization of AGC. The test results presented in the report apply only to the tested sample. Any objections to report issued by AGC should be submitted to AGC within 15days after the issuance of the test report. Further enquiry of validity or verification of the test report should be addressed to AGC by agc01@agccert.com.

2. GENERAL INFORMATION

2.1. EUT Description

General Information	
Product Name	Two-Way Radio
Test Model	M9
Hardware Version	V02
Software Version	V1.2
Exposure Category	Occupational/Controlled Exposure.
Modulation Type	FM
TX Frequency Range	400-480MHz
Rated Power	2W (It was fixed by the manufacturer, any individual can't arbitrarily change it)
Max. Output Power	32.01dBm
Channel Spacing	12.5 KHz
Antenna Type	Inseparable
Antenna Gain	2.15dBi
Body-Worn Accessories	Belt Clip and headset
Face-Head Accessories	None
Battery Type (s) Tested	DC3.7V, 1300mAh (by battery)

Note: 1. The sample used for testing is end product.
2. The test sample has no any deviation to the test method of standard mentioned in page 1.

Product	Type	
	☒ Production unit	☐ Identical Prototype

Any report having not been signed by authorized approver, or having been altered without authorization, or having not been stamped by the "Dedicated Testing/Inspection Stamp" is deemed to be invalid. Copying or excerpting portion of, or altering the content of the report is not permitted without the written authorization of AGC. The test results presented in the report apply only to the tested sample. Any objections to report issued by AGC should be submitted to AGC within 15days after the issuance of the test report. Further enquiry of validity or verification of the test report should be addressed to AGC by agc01@agccert.com.

3. SAR MEASUREMENT SYSTEM

3.1. The DASY5 system used for performing compliance tests consists of following items

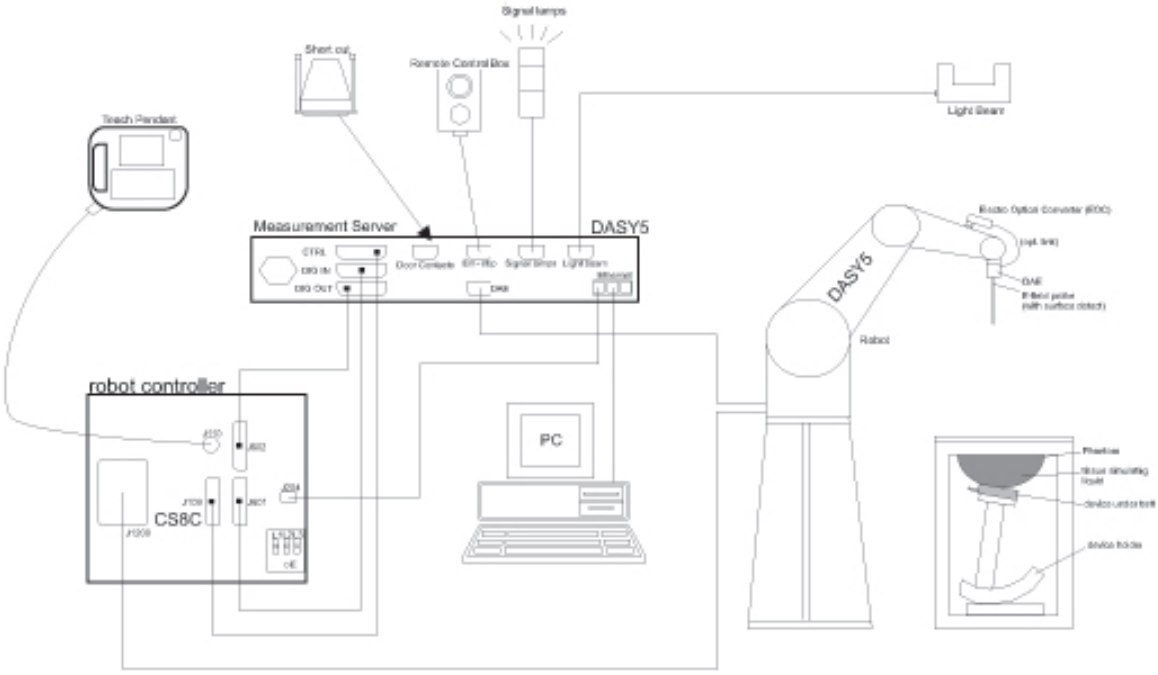

- A standard high precision 6-axis robot with controller, teach pendant and software.
- Data acquisition electronics (DAE) which attached to the robot arm extension. The DAE consist of a highly sensitive electrometer-grade preamplifier with auto-zeroing, a channel and gain-switching multiplexer, a fast 16 bit AD-converter and a command decoder with a control logic unit. Transmission to the measurement server is accomplished through an optical downlink for data and status information, as well as an optical uplink for commands and the clock
- A dosimetric probe equipped with an optical surface detector system.
- The Electro-optical converter (EOC) performs the conversion from optical to electrical signals for the digital Communication to the DAE. To use optical surface detection, a special version of the EOC is required. The EOC signal is transmitted to the measurement server.
- A Light Beam used is for probe alignment. This improves the (absolute) accuracy of the probe positioning.
- A computer running WinXP and the DASY5 software.
- Remote control and teach pendant as well as additional circuitry for robot safety such as warning lamps, etc.
- Phantoms, device holders and other accessories according to the targeted measurement.

Any report having not been signed by authorized approver, or having been altered without authorization, or having not been stamped by the "Dedicated Testing/Inspection Stamp" is deemed to be invalid. Copying or excerpting portion of, or altering the content of the report is not permitted without the written authorization of AGC. The test results presented in the report apply only to the tested sample. Any objections to report issued by AGC should be submitted to AGC within 15days after the issuance of the test report. Further enquiry of validity or verification of the test report should be addressed to AGC by agc01@agccert.com.

3.2. DASY5 E-Field Probe

The SAR measurement is conducted with the dosimetric probe manufactured by SPEAG. The probe is specially designed and calibrated for use in liquid with high permittivity. The dosimetric probe has special calibration in liquid at different frequency. SPEAG conducts the probe calibration in compliance with international and national standards (e.g. IEEE 1528 etc.)Under ISO17025.The calibration data are in Appendix D.

Isotropic E-Field Probe Specification

Model	ES3DV3-SN:3337	
Manufacture	SPEAG	
frequency	0.15GHz-0.45 GHz Linearity:±0.6%(K=2)	
Dynamic Range	0.01W/kg-100W/kg Linearity:±0.6%(K=2)	
Dimensions	Overall length:337mm Tip diameter:4mm Typical distance from probe tip to dipole centers:2mm	
Application	High precision dosimetric measurements in any exposure scenario (e.g., very strong gradient fields). Only probe which enables compliance testing for frequencies up to 3 GHz with precision of better 30%.	

3.3. Data Acquisition Electronics description

The data acquisition electronics (DAE) consist if a highly sensitive electrometer-grade preamplifier with auto-zeroing, a channel and gain-switching multiplexer, a fast 16 bit AD-converter and a command decoder with a control logic unit. Transmission to the measurement sever is accomplished through an optical downlink for data and status information, as well as an optical uplink for commands and the clock.

The mechanical probe mounting device includes two different sensor systems for frontal and sideways probe contacts. They are used for mechanical surface detection and probe collision detection.

DAE4

Input Impedance	200MOhm	
The Inputs	Symmetrical and floating	
Common mode rejection	above 80 dB	

Any report having not been signed by authorized approver, or having been altered without authorization, or having not been stamped by the "Dedicated Testing/Inspection Stamp" is deemed to be invalid. Copying or excerpting portion of, or altering the content of the report is not permitted without the written authorization of AGC. The test results presented in the report apply only to the tested sample. Any objections to report issued by AGC should be submitted to AGC within 15days after the issuance of the test report. Further enquiry of validity or verification of the test report should be addressed to AGC by agc01@agccert.com.

3.4. Robot

The DASY system uses the high precision robots (DASY5:TX60) type from Stäubli SA (France). For the 6-axis controller system, the robot controller version form is used.
The XL robot series have many features that are important for our application:

- High precision (repeatability 0.02 mm)
- High reliability (industrial design)
- Jerk-free straight movements
- Low ELF interference (the closed metallic construction shields against motor control fields)
- 6-axis controller

3.5. Light Beam Unit

The light beam switch allows automatic “tooling” of the probe. During the process, the actual position of the probe tip with respect to the robot arm is measured, as well as the probe length and the horizontal probe offset. The software then corrects all movements, such that the robot coordinates are valid for the probe tip.
The repeatability of this process is better than 0.1 mm. If a position has been taught with an aligned prob.1 mm, even if the other probe has different dimensions. During probe rotations, the probe tip will keep its actual position. e, the same position will be reached with another aligned probe within 0

Any report having not been signed by authorized approver, or having been altered without authorization, or having not been stamped by the “Dedicated Testing/Inspection Stamp” is deemed to be invalid. Copying or excerpting portion of, or altering the content of the report is not permitted without the written authorization of AGC. The test results presented in the report apply only to the tested sample. Any objections to report issued by AGC should be submitted to AGC within 15days after the issuance of the test report. Further enquiry of validity or verification of the test report should be addressed to AGC by agc01@agccert.com.

3.6. Device Holder

The DASY device holder is designed to cope with different positions given in the standard. It has two scales for the device rotation (with respect to the body axis) and the device inclination (with respect to the line between the ear reference points). The rotation center for both scales is the ear reference point (EPR).
Thus the device needs no repositioning when changing the angles.
The DASY device holder has been made out of low-loss POM material having the following dielectric parameters: relative permittivity ε=3 and loss tangent δ = 0.02. The amount of dielectric material has been reduced in the closest vicinity of the device, since measurements have suggested that the influence of the clamp on the test results could thus be lowered.

3.7. Measurement Server

The measurement server is based on a PC/104 CPU board with CPU (DASY5: 400 MHz, Intel Celeron), chip-disk (DASY5: 128MB), RAM (DASY5: 128MB). The necessary circuits for communication with the DAE electronic box, as well as the 16 bit AD converter system for optical detection and digital I/O interface are contained on the DAYS I/O board, which is directly connected to the PC/104 bus of the CPU board.
The measurement server performs all the real-time data evaluation for field measurements and surface detection, controls robot movements and handles safety operations.

Any report having not been signed by authorized approver, or having been altered without authorization, or having not been stamped by the "Dedicated Testing/Inspection Stamp" is deemed to be invalid. Copying or excerpting portion of, or altering the content of the report is not permitted without the written authorization of AGC. The test results presented in the report apply only to the tested sample. Any objections to report issued by AGC should be submitted to AGC within 15days after the issuance of the test report. Further enquiry of validity or verification of the test report should be addressed to AGC by agc01@agccert.com.

3.8. PHANTOM

SAM Twin Phantom

The SAM twin phantom is a fiberglass shell phantom with 2mm shell thickness (except the ear region where shell thickness increases to 6mm). It has three measurement areas: □ Left head □ Right head □ Flat phantom	

The bottom plate contains three pair of bolts for locking the device holder. The device holder positions are adjusted to the standard measurement positions in the three sections. A white cover is provided to tap the phantom during off-periods to prevent water evaporation and changes in the liquid parameters. On the phantom top, three reference markers are provided to identify the phantom position with respect to the robot.

ELI4 Phantom

□ Flat phantom a fiberglass shell flat phantom with 2mm+/- 0.2 mm shell thickness. It has only one measurement area for Flat phantom	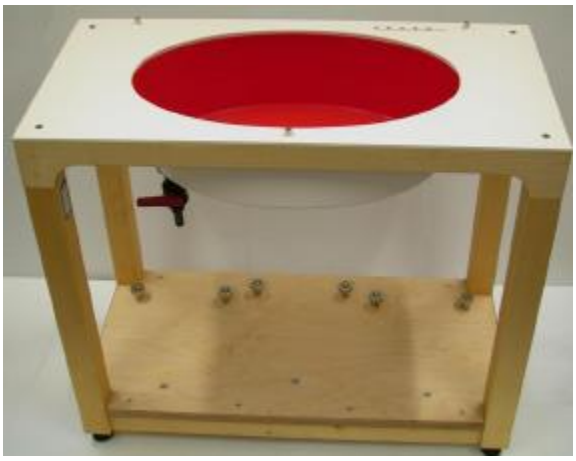

Any report having not been signed by authorized approver, or having been altered without authorization, or having not been stamped by the "Dedicated Testing/Inspection Stamp" is deemed to be invalid. Copying or excerpting portion of, or altering the content of the report is not permitted without the written authorization of AGC. The test results presented in the report apply only to the tested sample. Any objections to report issued by AGC should be submitted to AGC within 15days after the issuance of the test report. Further enquiry of validity or verification of the test report should be addressed to AGC by agc01@agccert.com.

4. SAR MEASUREMENT PROCEDURE

4.1. Specific Absorption Rate (SAR)

SAR is related to the rate at which energy is absorbed per unit mass in object exposed to a radio field. The SAR distribution in a biological body is complicated and is usually carried out by experimental techniques or numerical modeling. The standard recommends limits for two tiers of groups, occupational/controlled and occupational/uncontrolled, based on a person's awareness and ability to exercise control over his or her exposure. In general, occupational/controlled exposure limits are higher than the limits for general population/uncontrolled.

The SAR definition is the time derivative (rate) of the incremental energy (dW) absorbed by (dissipated in) an incremental mass (dm) contained in a volume element (dv) of given mass density (ρ). The equation description is as below:

$$\mathrm{SAR} = \frac{\mathrm{d}}{\mathrm{d}t}\left(\frac{\mathrm{d}W}{\mathrm{d}m}\right) = \frac{\mathrm{d}}{\mathrm{d}t}\left(\frac{\mathrm{d}W}{\rho \mathrm{d}V}\right)$$

SAR is expressed in units of Watts per kilogram (W/kg)
SAR can be obtained using either of the following equations:

$$\mathrm{SAR} = \frac{\sigma E^2}{\rho}$$

$$\mathrm{SAR} = c_h \left.\frac{\mathrm{d}T}{\mathrm{d}t}\right|_{t=0}$$

Where

SAR	is the specific absorption rate in watts per kilogram;
E	is the r.m.s. value of the electric field strength in the tissue in volts per meter;
σ	is the conductivity of the tissue in siemens per metre;
ρ	is the density of the tissue in kilograms per cubic metre;
c_h	is the heat capacity of the tissue in joules per kilogram and Kelvin;
$\frac{dT}{dt} \mid t = 0$	is the initial time derivative of temperature in the tissue in kelvins per second

Any report having not been signed by authorized approver, or having been altered without authorization, or having not been stamped by the "Dedicated Testing/Inspection Stamp" is deemed to be invalid. Copying or excerpting portion of, or altering the content of the report is not permitted without the written authorization of AGC. The test results presented in the report apply only to the tested sample. Any objections to report issued by AGC should be submitted to AGC within 15days after the issuance of the test report. Further enquiry of validity or verification of the test report should be addressed to AGC by agc01@agccert.com.

4.2. SAR Measurement Procedure

Step 1: Power Reference Measurement

The Power Reference Measurement and Power Drift Measurement are for monitoring the power drift of the device under test in the batch process. The minimum distance of probe sensors to surface is 2.7mm This distance cannot be smaller than the distance of sensor calibration points to probe tip as `defined in the probe properties,

Step 2: Area Scan

The Area Scan is used as a fast scan in two dimensions to find the area of high field values, before doing a fine measurement around the hot spot. The sophisticated interpolation routines implemented in DASY software can find the maximum locations even in relatively coarse grids. When an Area Scan has measured all reachable points, it computes the field maximal found in the scanned area, within a range of the global maximum. The range (in db) is specified in the standards for compliance testing. For example, a 2db range is required in IEEE Standard 1528 standards, whereby 3db is a requirement when compliance is assessed in accordance with the ARIB standard (Japan) If one Zoom Scan follows the Area Scan, then only the absolute maximum will be taken as reference. For cases where multiple maximum are detected, the number of Zoom Scan has to be increased accordingly.

Area Scan Parameters extracted from KDB 865664 D01 SAR Measurement 100MHz to 6GHz

	≤ 3 GHz	> 3 GHz
Maximum distance from closest measurement point (geometric center of probe sensors) to phantom surface	5 ± 1 mm	½·δ·ln(2) ± 0.5 mm
Maximum probe angle from probe axis to phantom surface normal at the measurement location	30° ± 1°	20° ± 1°
Maximum area scan spatial resolution: Δx_{Area}, Δy_{Area}	≤ 2 GHz: ≤ 15 mm 2 – 3 GHz: ≤ 12 mm	3 – 4 GHz: ≤ 12 mm 4 – 6 GHz: ≤ 10 mm
	When the x or y dimension of the test device, in the measurement plane orientation, is smaller than the above, the measurement resolution must be ≤ the corresponding x or y dimension of the test device with at least one measurement point on the test device.	

Step 3: Zoom Scan

Zoom Scan are used to assess the peak spatial SAR value within a cubic average volume containing 1g abd 10g of simulated tissue. The Zoom Scan measures points(refer to table below) within a cube whose base faces are centered on the maxima found in a preceding area scan job within the same procedure. When the measurement is done, the Zoom Scan evaluates the averaged SAR for 1g and 10g and displays these values next to the job's label.

Any report having not been signed by authorized approver, or having been altered without authorization, or having not been stamped by the "Dedicated Testing/Inspection Stamp" is deemed to be invalid. Copying or excerpting portion of, or altering the content of the report is not permitted without the written authorization of AGC. The test results presented in the report apply only to the tested sample. Any objections to report issued by AGC should be submitted to AGC within 15days after the issuance of the test report. Further enquiry of validity or verification of the test report should be addressed to AGC by agc01@agccert.com.

Zoom Scan Parameters extracted from KDB865664 D01 SAR Measurement 100MHz to 6GHz

Maximum zoom scan spatial resolution: Δx_{Zoom}, Δy_{Zoom}			≤ 2 GHz: ≤ 8 mm 2 – 3 GHz: ≤ 5 mm*	3 – 4 GHz: ≤ 5 mm* 4 – 6 GHz: ≤ 4 mm*
Maximum zoom scan spatial resolution, normal to phantom surface	uniform grid: $\Delta z_{Zoom}(n)$		≤ 5 mm	3 – 4 GHz: ≤ 4 mm 4 – 5 GHz: ≤ 3 mm 5 – 6 GHz: ≤ 2 mm
	graded grid	$\Delta z_{Zoom}(1)$: between 1st two points closest to phantom surface	≤ 4 mm	3 – 4 GHz: ≤ 3 mm 4 – 5 GHz: ≤ 2.5 mm 5 – 6 GHz: ≤ 2 mm
		$\Delta z_{Zoom}(n>1)$: between subsequent points	$\leq 1.5 \cdot \Delta z_{Zoom}(n-1)$	
Minimum zoom scan volume	x, y, z		≥ 30 mm	3 – 4 GHz: ≥ 28 mm 4 – 5 GHz: ≥ 25 mm 5 – 6 GHz: ≥ 22 mm

Note: δ is the penetration depth of a plane-wave at normal incidence to the tissue medium; see draft standard IEEE P1528-2011 for details.

* When zoom scan is required and the *reported* SAR from the *area scan based 1-g SAR estimation* procedures of KDB 447498 is ≤ 1.4 W/kg, ≤ 8 mm, ≤ 7 mm and ≤ 5 mm zoom scan resolution may be applied, respectively, for 2 GHz to 3 GHz, 3 GHz to 4 GHz and 4 GHz to 6 GHz.

Step 4: Power Drift Measurement

The Power Drift Measurement measures the field at the same location as the most recent power reference measurement within the same procedure, and with the same settings. The Power Drift Measurement gives the field difference in dB from the reading conducted within the same settings. This allows a user to monitor the power drift of the device under test within a batch process. The measurement procedure is the same as Step 1.

Any report having not been signed by authorized approver, or having been altered without authorization, or having not been stamped by the "Dedicated Testing/Inspection Stamp" is deemed to be invalid. Copying or excerpting portion of, or altering the content of the report is not permitted without the written authorization of AGC. The test results presented in the report apply only to the tested sample. Any objections to report issued by AGC should be submitted to AGC within 15days after the issuance of the test report. Further enquiry of validity or verification of the test report should be addressed to AGC by agc01@agccert.com.

5. TISSUE SIMULATING LIQUID

For SAR measurement of the field distribution inside the phantom, the phantom must be filled with homogeneous tissue simulating liquid to a depth of at least 15cm. For head SAR testing the liquid height from the ear reference point (ERP) of the phantom to the liquid top surface is larger than 15cm For body SAR testing, the liquid height from the center of the flat phantom to the liquid top surface is larger than 15cm.The nominal dielectric values of the tissue simulating liquids in the phantom and the tolerance of 10% are listed in 6.2

5.1. The composition of the tissue simulating liquid

Ingredient (% Weight) / Frequency (MHz)	Water	Nacl	Sugar	HEC	Bactericide	DGBE	1,2-Propanediol	Triton X-100
450 Head (100%)	38.56	3.95	56.32	0.98	0.19	0.0	0.0	0.0

5.2. Tissue Dielectric Parameters for Head and Body Phantoms

The head and body tissue dielectric parameters recommended by the IEEE Std. 1528 have been incorporated in the following table.

Target Frequency (MHz)	head		body	
	εr	σ (S/m)	εr	σ (S/m)
150	52.3	0.76	52.3	0.76
300	45.3	0.87	45.3	0.87
450	**43.5**	**0.87**	**43.5**	**0.87**
835	41.5	0.90	41.5	0.90
900	41.5	0.97	41.5	0.97
915	41.5	0.98	41.5	0.98
1450	40.5	1.20	40.5	1.20
1610	40.3	1.29	40.3	1.29
1800 – 2000	40.0	1.40	40.0	1.40
2450	39.2	1.80	39.2	1.80
3000	38.5	2.40	38.5	2.40

(εr = relative permittivity, σ = conductivity and ρ = 1000 kg/m3)

Any report having not been signed by authorized approver, or having been altered without authorization, or having not been stamped by the "Dedicated Testing/Inspection Stamp" is deemed to be invalid. Copying or excerpting portion of, or altering the content of the report is not permitted without the written authorization of AGC. The test results presented in the report apply only to the tested sample. Any objections to report issued by AGC should be submitted to AGC within 15days after the issuance of the test report. Further enquiry of validity or verification of the test report should be addressed to AGC by agc01@agccert.com.

5.3. Tissue Calibration Result

The dielectric parameters of the liquids were verified prior to the SAR evaluation using DASY5 Dielectric Probe Kit and R&S Network Analyzer ZVL6.

Tissue Stimulant Measurement for 450MHz				
Fr. (MHz)	Dielectric Parameters (±10%)		Tissue Temp [°C]	Test time
	Head			
	εr43.50(39.150 - 47.850)	δ[s/m]0.87(0.783 - 0.957)		
406.125	45.24	0.80	21.1	Nov. 28, 2023
420.025	44.37	0.82		
435.025	43.62	0.83		
450.000	42.93	0.85		
450.025	42.93	0.85		
465.025	41.66	0.86		
479.975	40.76	0.88		

Any report having not been signed by authorized approver, or having been altered without authorization, or having not been stamped by the "Dedicated Testing/Inspection Stamp" is deemed to be invalid. Copying or excerpting portion of, or altering the content of the report is not permitted without the written authorization of AGC. The test results presented in the report apply only to the tested sample. Any objections to report issued by AGC should be submitted to AGC within 15days after the issuance of the test report. Further enquiry of validity or verification of the test report should be addressed to AGC by agc01@agccert.com.

6. SAR SYSTEM CHECK PROCEDURE

6.1. SAR System Check Procedures

SAR system check is required to confirm measurement accuracy, according to the tissue dielectric media, probe calibration points and other system operating parameters required for measuring the SAR of a test device. The system verification must be performed for each frequency band and within the valid range of each probe calibration point required for testing the device. The same SAR probe(s) and tissue-equivalent media combinations used with each specific SAR system for system verification must be used for device testing. When multiple probe calibration points are required to cover substantially large transmission bands, independent system verifications are required for each probe calibration point. A system verification must be performed before each series of SAR measurements using the same probe calibration point and tissue-equivalent medium. Additional system verification should be considered according to the conditions of the tissue-equivalent medium and measured tissue dielectric parameters, typically every three to four days when the liquid parameters are re-measured or sooner when marginal liquid parameters are used at the beginning of a series of measurements.

Each DASY system is equipped with one or more system check kits. These units, together with the predefined measurement procedures within the DASY software, enable the user to conduct the system check and system validation. System kit includes a dipole, and dipole device holder.

The system check verifies that the system operates within its specifications. It's performed daily or before every SAR measurement. The system check uses normal SAR measurement in the flat section of the phantom with a matched dipole at a specified distance. The system check setup is shown as below.

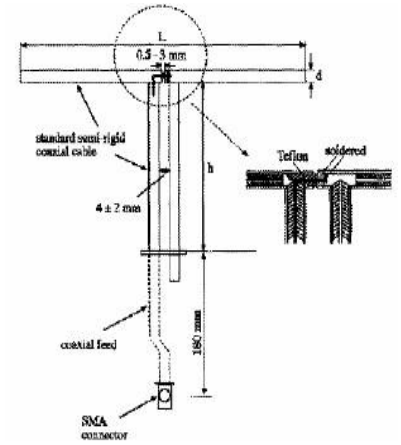

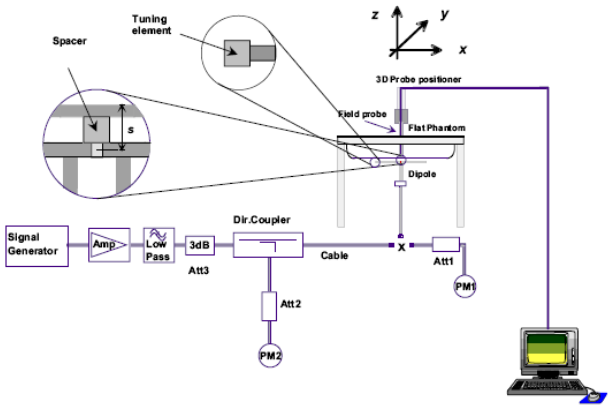

Any report having not been signed by authorized approver, or having been altered without authorization, or having not been stamped by the "Dedicated Testing/Inspection Stamp" is deemed to be invalid. Copying or excerpting portion of, or altering the content of the report is not permitted without the written authorization of AGC. The test results presented in the report apply only to the tested sample. Any objections to report issued by AGC should be submitted to AGC within 15days after the issuance of the test report. Further enquiry of validity or verification of the test report should be addressed to AGC by agc01@agccert.com.

6.2. SAR System Check

6.2.1. Dipoles

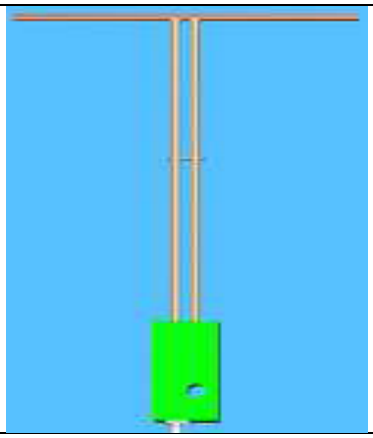	The dipoles used is based on the IEEE-1528 standard, and is complied with mechanical and electrical specifications in line with the requirements of IEEE. the table below provides details for the mechanical and electrical specifications for the dipoles

Frequency	R/L (mm)	R/h (mm)	d (mm)
450MHz	290	166.7	6.35

6.2.2. System Check Result

System Performance Check at 450MHz								
Validation Kit: D450V3 SN:1113								
Frequency [MHz]	Target Value(W/kg)		Reference Result (± 10%)		Normalized to 1W(W/kg)		Tissue Temp. [°C]	Test time
	1g	10g	1g	10g	1g	10g		
450	4.61	3.09	4.149-5.071	2.781-3.399	4.55	3.14	21.1	Nov. 28, 2023

Note:
(1) We use a CW signal of 18dBm(450MHz)for system check, and then all SAR value are normalized to 1W forward power. The result must be within ±10% of target value.

Any report having not been signed by authorized approver, or having been altered without authorization, or having not been stamped by the "Dedicated Testing/Inspection Stamp" is deemed to be invalid. Copying or excerpting portion of, or altering the content of the report is not permitted without the written authorization of AGC. The test results presented in the report apply only to the tested sample. Any objections to report issued by AGC should be submitted to AGC within 15days after the issuance of the test report. Further enquiry of validity or verification of the test report should be addressed to AGC by agc01@agccert.com.

7. EUT TEST POSITION

This EUT was tested in **Front Face and Rear Face.**

7.1. Body Worn Position

(1) To position the EUT parallel to the phantom surface.
(2) To adjust the EUT parallel to the flat phantom.
(3) To adjust the distance between the EUT surface and the flat phantom to **25mm** while used in front of face, and body back touch with all accessories.

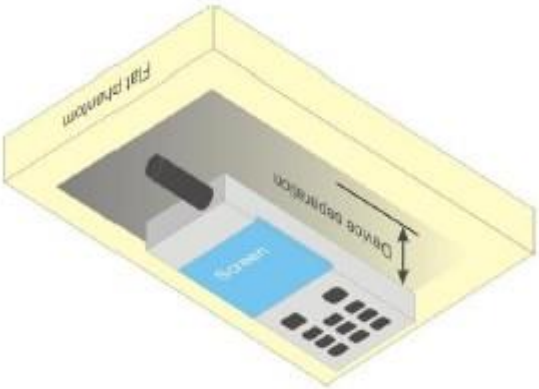

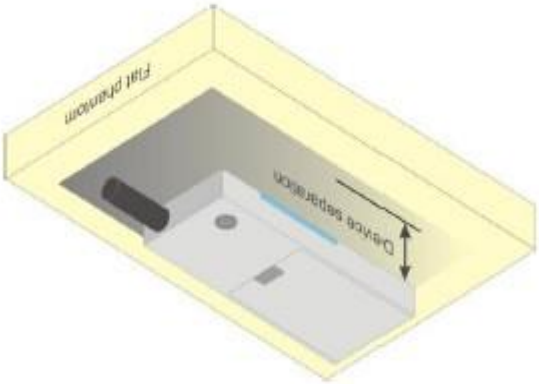

Any report having not been signed by authorized approver, or having been altered without authorization, or having not been stamped by the "Dedicated Testing/Inspection Stamp" is deemed to be invalid. Copying or excerpting portion of, or altering the content of the report is not permitted without the written authorization of AGC. The test results presented in the report apply only to the tested sample. Any objections to report issued by AGC should be submitted to AGC within 15days after the issuance of the test report. Further enquiry of validity or verification of the test report should be addressed to AGC by agc01@agccert.com.

8. SAR EXPOSURE LIMITS

Limits for Occupational / Controlled Exposure Environment

Type Exposure Limits	Occupational / Controlled Exposure Environment(W/kg)
Spatial Peak (averaged over any 1g of tissue)	8.0

Any report having not been signed by authorized approver, or having been altered without authorization, or having not been stamped by the "Dedicated Testing/Inspection Stamp" is deemed to be invalid. Copying or excerpting portion of, or altering the content of the report is not permitted without the written authorization of AGC. The test results presented in the report apply only to the tested sample. Any objections to report issued by AGC should be submitted to AGC within 15days after the issuance of the test report. Further enquiry of validity or verification of the test report should be addressed to AGC by agc01@agccert.com.

9. TEST FACILITY

Test Site	Attestation of Global Compliance (Shenzhen) Co., Ltd
Location	1-2/F, Building 19, Junfeng Industrial Park, Chongqing Road, Heping Community, Fuhai Street, Bao'an District, Shenzhen, Guangdong, China
Designation Number	CN1259
FCC Test Firm Registration Number	975832
A2LA Cert. No.	5054.02
Description	Attestation of Global Compliance(Shenzhen) Co., Ltd is accredited by A2LA

Any report having not been signed by authorized approver, or having been altered without authorization, or having not been stamped by the "Dedicated Testing/Inspection Stamp" is deemed to be invalid. Copying or excerpting portion of, or altering the content of the report is not permitted without the written authorization of AGC. The test results presented in the report apply only to the tested sample. Any objections to report issued by AGC should be submitted to AGC within 15days after the issuance of the test report. Further enquiry of validity or verification of the test report should be addressed to AGC by agc01@agccert.com.

10. TEST EQUIPMENT LIST

Equipment description	Manufacturer/ Model	Identification No.	Software version	Current calibration date	Next calibration date
Stäubli Robot	Stäubli-TX60	F13/5Q2UD1/A/01	N/A	N/A	N/A
Robot Controller	Stäubli-CS8	139522	N/A	N/A	N/A
E-Field Probe	Speag- ES3DV3	SN:3337	N/A	Oct. 14, 2023	Oct. 13, 2024
SAM Twin Phantom	Speag-SAM	1790	N/A	N/A	N/A
ELI4 Phantom	ELI V5.0	1210	N/A	N/A	N/A
Device Holder	Speag-SD 000 H01 KA	SD 000 H01 KA	N/A	N/A	N/A
DAE4	Speag-SD 000 D04 BM	1398	N/A	May 17, 2023	May 16, 2024
SAR Software	Speag-DASY5	DASY52.8.7.1137	N/A	N/A	N/A
Liquid	SATIMO	N/A	N/A	N/A	N/A
Dipole	Speag-D450V3	SN:1113	N/A	Feb. 05, 2021	Feb. 04, 2024
Signal Generator	Agilent-E4438C	US41461365	V5.03	Jun. 01, 2023	May 31, 2024
EXA Signal Analyzer	Agilent / N9010A	MY53470504	N/A	Jun. 01, 2023	May 31, 2024
Network Analyzer	Rhode & Schwarz ZVL6	N/A	3.2	Sep. 21, 2023	Sep. 20, 2024
Attenuator	Warison /WATT-6SR1211	S/N:WRJ34AYM2F1	N/A	Jun. 07, 2023	Jun. 06, 2024
Amplifier	AS0104-55_55	1004793	N/A	N/A	N/A
Directional Couple	Werlatone/ C5571-10	SN99463	N/A	Mar. 10, 2022	Mar. 09, 2024
Power Sensor	NRP-Z21	1137.6000.02	N/A	Sep. 05, 2023	Sep. 04, 2024
Power Sensor	NRP-Z23	100323	N/A	Feb. 15, 2023	Feb. 14, 2024
Power Viewer	R&S	V2.3.1.0	N/A	N/A	N/A
Calibration standard parts for network sub - port	R&S/ ZV-Z132	N/A	V2.3.1.0	Nov. 11, 2023	Nov. 10, 2024

Note: Per KDB 865664 Dipole SAR Validation, AGC Lab has adopted 3 years calibration intervals. On annual basis, every measurement dipole has been evaluated and is in compliance with the following criteria:
1. There is no physical damage on the dipole;
2. System validation with specific dipole is within 10% of calibrated value;
3. Return-loss is within 20% of calibrated measurement;
4. Impedance is within 5Ω of calibrated measurement.

Any report having not been signed by authorized approver, or having been altered without authorization, or having not been stamped by the "Dedicated Testing/Inspection Stamp" is deemed to be invalid. Copying or excerpting portion of, or altering the content of the report is not permitted without the written authorization of AGC. The test results presented in the report apply only to the tested sample. Any objections to report issued by AGC should be submitted to AGC within 15days after the issuance of the test report. Further enquiry of validity or verification of the test report should be addressed to AGC by agc01@agccert.com.

11. MEASUREMENT UNCERTAINTY

The component of uncertainty may generally be categorized according to the methods used to evaluate them. The evaluation of uncertainty by the statistical analysis of a series of observations is termed a Type An evaluation of uncertainty. The evaluation of uncertainty by means other than the statistical analysis of a series of observation is termed a Type B evaluation of uncertainty. Each component of uncertainty, however evaluated, is represented by an estimated standard deviation, termed standard uncertainty, which is determined by the positive square root of the estimated variance.

A Type A evaluation of standard uncertainty may be based on any valid statistical method for treating data. This includes calculating the standard deviation of the mean of a series of independent observations; using the method of least squares to fit a curve to the data in order to estimate the parameter of the curve and their standard deviations; or carrying out an analysis of variance in order to identify and quantify random effects in certain kinds of measurement.

A type B evaluation of standard uncertainty is typically based on scientific judgment using all of the relevant information available. These may include previous measurement data, experience, and knowledge of the behavior and properties of relevant materials and instruments, manufacture's specification, data provided in calibration reports and uncertainties assigned to reference data taken from handbooks. Broadly speaking, the uncertainty is either obtained from an outdoor source or obtained from an assumed distribution, such as the normal distribution, rectangular or triangular distributions indicated in Table as follow.

Uncertainty Distributions	Normal	Rectangular	Triangular	U-Shape
Multiplying Factor(a)	1/k(b)	$1/\sqrt{3}$	$1/\sqrt{6}$	$1/\sqrt{2}$

(a) Standard uncertainty is determined as the product of the multiplying factor and the estimated range of variations in the measured quantity

(b) κ is the coverage factor

Table 13.1 Standard Uncertainty for Assumed Distribution (above table)

The combined standard uncertainty of the measurement result represents the estimated standard deviation of the result. It is obtained by combining the individual standard uncertainties of both Type A and Type B evaluation using the usual "root-sum-squares" (RSS) methods of combining standard deviations by taking the positive square root of the estimated variances.

Expanded uncertainty is a measure of uncertainty that defines an interval about the measurement result within which the measured value is confidently believed to lie. It is obtained by multiplying the combined standard uncertainty by a coverage factor. Typically, the coverage factor ranges from 2 to 3. Using a coverage factor allows the true value of a measured quantity to be specified with a defined probability within the specified uncertainty range. For purpose of this document, a coverage factor two is used, which corresponds to confidence interval of about 95 %. The DASY uncertainty Budget is shown in the following tables.

Any report having not been signed by authorized approver, or having been altered without authorization, or having not been stamped by the "Dedicated Testing/Inspection Stamp" is deemed to be invalid. Copying or excerpting portion of, or altering the content of the report is not permitted without the written authorization of AGC. The test results presented in the report apply only to the tested sample. Any objections to report issued by AGC should be submitted to AGC within 15days after the issuance of the test report. Further enquiry of validity or verification of the test report should be addressed to AGC by agc01@agccert.com.

DASY Uncertainty- ES3DV3 Measurement uncertainty for Dipole averaged over 1 gram / 10 gram.									
a	b	c	d	e f(d,k)	f	g	h c×f/e	i c×g/e	k
Uncertainty Component	Sec.	Tol (± %)	Prob. Dist.	Div.	Ci (1g)	Ci (10g)	1g Ui (±%)	10g Ui (±%)	vi
Measurement System									
Probe calibration	E.2.1	6.65	N	1	1	1	6.65	6.65	∞
Axial Isotropy	E.2.2	0.25	R	$\sqrt{3}$	√0.5	√0.5	0.10	0.10	∞
Hemispherical Isotropy	E.2.2	1.3	R	$\sqrt{3}$	√0.5	√0.5	0.53	0.53	∞
Boundary effect	E.2.3	1	R	$\sqrt{3}$	1	1	0.58	0.58	∞
Linearity	E.2.4	0.3	R	$\sqrt{3}$	1	1	0.17	0.17	∞
System detection limits	E.2.4	1.0	R	$\sqrt{3}$	1	1	0.58	0.58	∞
Modulation response	E2.5	3.3	R	$\sqrt{3}$	1	1	1.91	1.91	∞
Readout Electronics	E.2.6	0.15	N	1	1	1	0.15	0.15	∞
Response Time	E.2.7	0	R	$\sqrt{3}$	1	1	0	0	∞
Integration Time	E.2.8	1.7	R	$\sqrt{3}$	1	1	0.98	0.98	∞
RF ambient conditions-Noise	E.6.1	3.0	R	$\sqrt{3}$	1	1	1.73	1.73	∞
RF ambient conditions-reflections	E.6.1	3.0	R	$\sqrt{3}$	1	1	1.73	1.73	∞
Probe positioner mechanical tolerance	E.6.2	0.4	R	$\sqrt{3}$	1	1	0.23	0.23	∞
Probe positioning with respect to phantom shell	E.6.3	6.7	R	$\sqrt{3}$	1	1	3.87	3.87	∞
Extrapolation, interpolation, and integrations algorithms for max. SAR evaluation	E.5	4	R	$\sqrt{3}$	1	1	2.31	2.31	∞
Test sample Related									
Test sample positioning	E.4.2	2.9	N	1	1	1	2.90	2.90	∞
Device holder uncertainty	E.4.1	3.6	N	1	1	1	3.60	3.60	∞
Output power variation—SAR drift measurement	E.2.9	5	R	$\sqrt{3}$	1	1	2.89	2.89	∞
SAR scaling	E.6.5	5	R	$\sqrt{3}$	1	1	2.89	2.89	∞
Phantom and tissue parameters									
Phantom shell uncertainty—shape, thickness, and permittivity	E.3.1	6.6	R	$\sqrt{3}$	1	1	3.81	3.81	∞
Uncertainty in SAR correction for deviations in permittivity and conductivity	E.3.2	1.9	N	1	1	0.84	1.90	1.60	∞
Liquid conductivity measurement	E.3.3	4	N	1	0.78	0.71	3.12	2.84	M
Liquid permittivity measurement	E.3.3	5	N	1	0.23	0.26	1.15	1.30	M
Liquid conductivity—temperature uncertainty	E.3.4	2.5	R	$\sqrt{3}$	0.78	0.71	1.13	1.02	∞
Liquid permittivity—temperature uncertainty	E.3.4	2.5	R	$\sqrt{3}$	0.23	0.26	0.33	0.38	∞
Combined Standard Uncertainty			RSS				11.79	11.62	
Expanded Uncertainty (95% Confidence interval)			K=2				23.58	23.25	

Any report having not been signed by authorized approver, or having been altered without authorization, or having not been stamped by the "Dedicated Testing/Inspection Stamp" is deemed to be invalid. Copying or excerpting portion of, or altering the content of the report is not permitted without the written authorization of AGC. The test results presented in the report apply only to the tested sample. Any objections to report issued by AGC should be submitted to AGC within 15days after the issuance of the test report. Further enquiry of validity or verification of the test report should be addressed to AGC by agc01@agccert.com.

DASY Uncertainty- ES3DV3 System Check uncertainty for Dipole averaged over 1 gram / 10 gram.									
a	b	c	d	e f(d,k)	f	g	h c×f/e	i c×g/e	k
Uncertainty Component	Sec.	Tol (± %)	Prob. Dist.	Div.	Ci (1g)	Ci (10g)	1g Ui (±%)	10g Ui (±%)	vi
Measurement System									
Probe calibration drift	E.2.1	0.5	N	1	1	1	0.5	0.5	∞
Axial Isotropy	E.2.2	0.25	R	$\sqrt{3}$	0	0	0.00	0.00	∞
Hemispherical Isotropy	E.2.2	1.3	R	$\sqrt{3}$	0	0	0.00	0.00	∞
Boundary effect	E.2.3	1	R	$\sqrt{3}$	0	0	0.00	0.00	∞
Linearity	E.2.4	0.3	R	$\sqrt{3}$	0	0	0.00	0.00	∞
System detection limits	E.2.4	1.0	R	$\sqrt{3}$	0	0	0.00	0.00	∞
Modulation response	E2.5	3.3	R	$\sqrt{3}$	0	0	0.00	0.00	∞
Readout Electronics	E.2.6	0.15	N	1	0	0	0.00	0.00	∞
Response Time	E.2.7	0	R	$\sqrt{3}$	0	0	0.00	0.00	∞
Integration Time	E.2.8	1.7	R	$\sqrt{3}$	0	0	0.00	0.00	∞
RF ambient conditions-Noise	E.6.1	3.0	R	$\sqrt{3}$	0	0	0.00	0.00	∞
RF ambient conditions-reflections	E.6.1	3.0	R	$\sqrt{3}$	0	0	0.00	0.00	∞
Probe positioner mechanical tolerance	E.6.2	0.4	R	$\sqrt{3}$	1	1	0.23	0.23	∞
Probe positioning with respect to phantom shell	E.6.3	6.7	R	$\sqrt{3}$	1	1	3.87	3.87	∞
Extrapolation, interpolation, and integrations algorithms for max. SAR evaluation	E.5	4	R	$\sqrt{3}$	0	0	0.00	0.00	∞
System check source (dipole)									
Deviation of experimental dipoles	E.6.4	2.0	N	1	1	1	2.00	2.00	∞
Input power and SAR drift measurement	8,6.6.4	5.0	R	$\sqrt{3}$	1	1	2.89	2.89	∞
Dipole axis to liquid distance	8,E.6.6	2.0	R	$\sqrt{3}$	1	1	1.15	1.15	∞
Phantom and tissue parameters									
Phantom shell uncertainty—shape, thickness, and permittivity	E.3.1	6.6	R	$\sqrt{3}$	1	1	3.81	3.81	∞
Uncertainty in SAR correction for deviations in permittivity and conductivity	E.3.2	1.9	N	1	1	0.84	1.90	1.60	∞
Liquid conductivity measurement	E.3.3	4	N	1	0.78	0.71	3.12	2.84	M
Liquid permittivity measurement	E.3.3	5	N	1	0.23	0.26	1.15	1.30	M
Liquid conductivity—temperature uncertainty	E.3.4	2.5	R	$\sqrt{3}$	0.78	0.71	1.13	1.02	∞
Liquid permittivity—temperature uncertainty	E.3.4	2.5	R	$\sqrt{3}$	0.23	0.26	0.33	0.38	∞
Combined Standard Uncertainty			RSS				7.34	7.07	
Expanded Uncertainty (95% Confidence interval)			K=2				14.67	14.14	

Any report having not been signed by authorized approver, or having been altered without authorization, or having not been stamped by the "Dedicated Testing/Inspection Stamp" is deemed to be invalid. Copying or excerpting portion of, or altering the content of the report is not permitted without the written authorization of AGC. The test results presented in the report apply only to the tested sample. Any objections to report issued by AGC should be submitted to AGC within 15days after the issuance of the test report. Further enquiry of validity or verification of the test report should be addressed to AGC by agc01@agccert.com.

DASY Uncertainty- ES3DV3 System Validation uncertainty for Dipole averaged over 1 gram / 10 gram.									
a	b	c	d	e f(d,k)	f	g	h c×f/e	i c×g/e	k
Uncertainty Component	Sec.	Tol (±%)	Prob. Dist.	Div.	Ci (1g)	Ci (10g)	1g Ui (±%)	10g Ui (±%)	vi
Measurement System									
Probe calibration	E.2.1	6.65	N	1	1	1	6.65	6.65	∞
Axial Isotropy	E.2.2	0.25	R	$\sqrt{3}$	1	1	0.14	0.14	∞
Hemispherical Isotropy	E.2.2	1.3	R	$\sqrt{3}$	0	0	0.00	0.00	∞
Boundary effect	E.2.3	1	R	$\sqrt{3}$	1	1	0.58	0.58	∞
Linearity	E.2.4	0.3	R	$\sqrt{3}$	1	1	0.17	0.17	∞
System detection limits	E.2.4	1.0	R	$\sqrt{3}$	1	1	0.58	0.58	∞
Modulation response	E2.5	3.3	R	$\sqrt{3}$	0	0	0.00	0.00	∞
Readout Electronics	E.2.6	0.15	N	1	1	1	0.15	0.15	∞
Response Time	E.2.7	0	R	$\sqrt{3}$	0	0	0.00	0.00	∞
Integration Time	E.2.8	1.7	R	$\sqrt{3}$	0	0	0.00	0.00	∞
RF ambient conditions-Noise	E.6.1	3.0	R	$\sqrt{3}$	1	1	1.73	1.73	∞
RF ambient conditions-reflections	E.6.1	3.0	R	$\sqrt{3}$	1	1	1.73	1.73	∞
Probe positioner mechanical tolerance	E.6.2	0.4	R	$\sqrt{3}$	1	1	0.37	0.37	∞
Probe positioning with respect to phantom shell	E.6.3	6.7	R	$\sqrt{3}$	1	1	3.87	3.87	∞
Extrapolation, interpolation, and integrations algorithms for max. SAR evaluation	E.5	4	R	$\sqrt{3}$	1	1	2.31	2.31	∞
System check source (dipole)									
Deviation of experimental dipole from numerical dipole	E.6.4	5.0	N	1	1	1	5.00	5.00	∞
Input power and SAR drift measurement	8,6.6.4	5.0	R	$\sqrt{3}$	1	1	2.89	2.89	∞
Dipole axis to liquid distance	8,E.6.6	2.0	R	$\sqrt{3}$	1	1	1.15	1.15	∞
Phantom and tissue parameters									
Phantom shell uncertainty—shape, thickness, and permittivity	E.3.1	6.6	R	$\sqrt{3}$	1	1	3.81	3.81	∞
Uncertainty in SAR correction for deviations in permittivity and conductivity	E.3.2	1.9	N	1	1	0.84	1.90	1.60	∞
Liquid conductivity measurement	E.3.3	4	N	1	0.78	0.71	3.12	2.84	M
Liquid permittivity measurement	E.3.3	5	N	1	0.23	0.26	1.15	1.30	M
Liquid conductivity—temperature uncertainty	E.3.4	2.5	R	$\sqrt{3}$	0.78	0.71	1.13	1.02	∞
Liquid permittivity—temperature uncertainty	E.3.4	2.5	R	$\sqrt{3}$	0.23	0.26	0.33	0.38	∞
Combined Standard Uncertainty			RSS				11.44	11.27	
Expanded Uncertainty (95% Confidence interval)			K=2				22.88	22.54	

Any report having not been signed by authorized approver, or having been altered without authorization, or having not been stamped by the "Dedicated Testing/Inspection Stamp" is deemed to be invalid. Copying or excerpting portion of, or altering the content of the report is not permitted without the written authorization of AGC. The test results presented in the report apply only to the tested sample. Any objections to report issued by AGC should be submitted to AGC within 15days after the issuance of the test report. Further enquiry of validity or verification of the test report should be addressed to AGC by agc01@agccert.com.

12. POWER MEASUREMENT

Frequency (MHz)	Channel Spacing	Max. Output Power (dBm)
2W		
406.125	12.5KHz	**32.01**
420.025		31.96
435.025		31.89
450.025		31.73
465.025		31.60
479.975		31.07

Any report having not been signed by authorized approver, or having been altered without authorization, or having not been stamped by the "Dedicated Testing/Inspection Stamp" is deemed to be invalid. Copying or excerpting portion of, or altering the content of the report is not permitted without the written authorization of AGC. The test results presented in the report apply only to the tested sample. Any objections to report issued by AGC should be submitted to AGC within 15days after the issuance of the test report. Further enquiry of validity or verification of the test report should be addressed to AGC by agc01@agccert.com.

13. TEST RESULTS

13.1. SAR Test Results Summary

13.1.1. Test position and configuration

Face up SAR was performed with the device configured in the positions according to KDB 643646 and Body SAR was performed with the device configured with all accessories close to the Flat Phantom.

13.1.2. Operation Mode

- Set the EUT to maximum output power level and transmit on lower, middle and top channel with 100% duty cycle individually during SAR measurement.
- Per KDB 447498D01 v06 (Chapter 4.1 6) the number of channels to be assessed is 6.
- Per KDB 643646 D01, Passive body-worn and audio accessories generally do not apply to the head SAR of PTT radios. Head SAR is measured with the front surface of the radio positioned at 2.5 cm parallel to a flat phantom.

  When testing antennas with the default battery:
  a. When the SAR≤ 3.5 W/kg, testing of all other required channels is not necessary for that antenna;
  b. When the SAR > 3.5 W/kg and ≤ 4.0 W/kg, testing of the required immediately channel(s) is not necessary; testing of the other required channels may still be required.
  c. When the SAR > 4.0 W/kg and ≤ 6.0 W/kg, SAR should be measured for that antenna on the all required channels;
  d. When the SAR > 6.0 W/kg, test all required channels for that antenna
  e. When the highest scaled SAR is ≤ 6.0 W/kg, PBA is not required

- Per KDB 643646 D01, Body SAR is measured with the radio placed in a body-worn accessory, positioned against a flat phantom, representative of the normal operating conditions expected by users and typically with a standard default audio accessory supplied with the radio.

  When testing antennas with the default battery: the same test measurement with head part.
- The EUT only contains the Testing antenna, Standard battery and default body-worn accessory specified by customer. The earphone is only for testing

Any report having not been signed by authorized approver, or having been altered without authorization, or having not been stamped by the "Dedicated Testing/Inspection Stamp" is deemed to be invalid. Copying or excerpting portion of, or altering the content of the report is not permitted without the written authorization of AGC. The test results presented in the report apply only to the tested sample. Any objections to report issued by AGC should be submitted to AGC within 15days after the issuance of the test report. Further enquiry of validity or verification of the test report should be addressed to AGC by agc01@agccert.com.

13.1.3. Antenna Location: (back view)

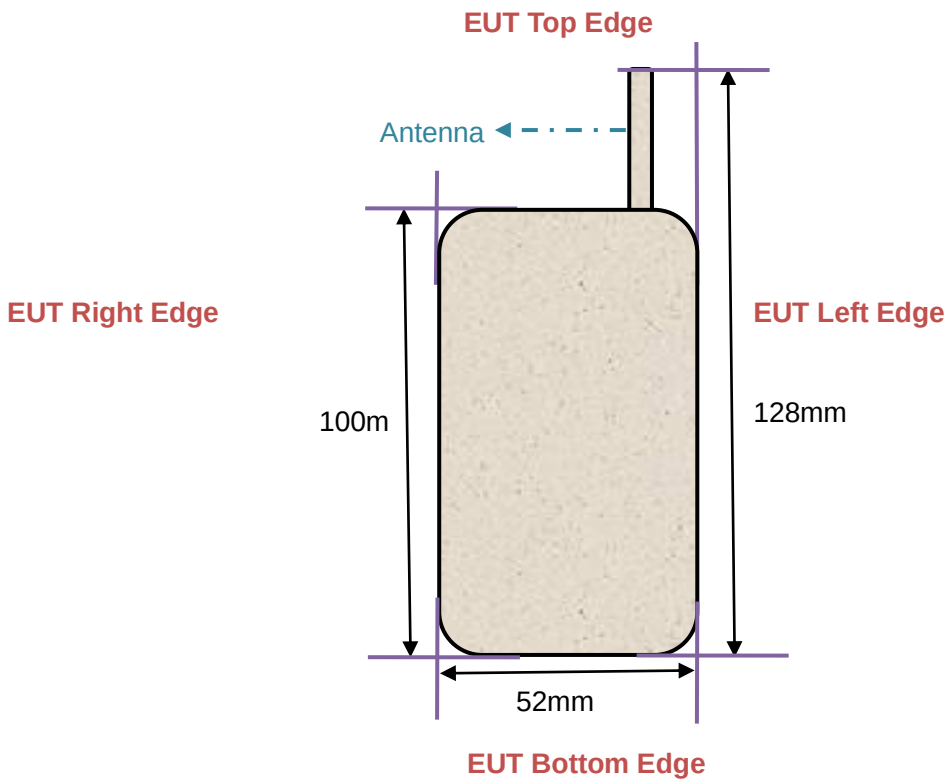

Any report having not been signed by authorized approver, or having been altered without authorization, or having not been stamped by the "Dedicated Testing/Inspection Stamp" is deemed to be invalid. Copying or excerpting portion of, or altering the content of the report is not permitted without the written authorization of AGC. The test results presented in the report apply only to the tested sample. Any objections to report issued by AGC should be submitted to AGC within 15days after the issuance of the test report. Further enquiry of validity or verification of the test report should be addressed to AGC by agc01@agccert.com.

13.1.4. SAR Test Results Summary

SAR MEASUREMENT									
Depth of Liquid (cm):>15				Relative Humidity (%): 59.5					
Product: Two-Way Radio									
Test Mode: Hold to Face with 2.5 cm separation & body back touch with all accessories									
Position	**Freq. (MHz)**	**Separation (KHz)**	**Power Drift (±0.2dB)**	**SAR 1g with 100% duty Cycle (W/kg)**	**SAR 1g with 50% duty cycle (W/kg)**	**Max. Tune-up Power (dBm)**	**Meas. output Power (dBm)**	**Scaled SAR (W/kg)**	**Limit W/kg**
Analog									
Face Up	450.025	12.5	-1.04	**0.275**	0.1375	33.01	31.73	**0.235**	8.0
Back Touch +Belt Clip + headset	450.025		-1.58	**1.19**	0.595	33.01	31.73	**1.150**	8.0

Note:

1. During the test, EUT power is 2W with 100% duty cycle;
2. There is just default battery and antenna in this project;
3. $\text{Max_ Scaled} = \text{SAR_meas} * 10^{\frac{|\text{Drift}|}{10}} * \frac{\text{P_max}}{\text{P_int}} * \text{DC}$

   P_ max = Maximum Power(W)
   P_ int = Initial Power(W)
   Drift = DASY drift results(dB)
   SAR_ meas=Measured 10-g or 1-g Avg.SAR(W/kg)
   DC = Transmission mode duty cycle in % where applicable 50% duty cycle is applied for PTT operation.
   For conservative results, the following are applied:
   If P_ int > P_ max, then P_ max/P_ int =1. Drift = 1 for positive drift

Any report having not been signed by authorized approver, or having been altered without authorization, or having not been stamped by the "Dedicated Testing/Inspection Stamp" is deemed to be invalid. Copying or excerpting portion of, or altering the content of the report is not permitted without the written authorization of AGC. The test results presented in the report apply only to the tested sample. Any objections to report issued by AGC should be submitted to AGC within 15days after the issuance of the test report. Further enquiry of validity or verification of the test report should be addressed to AGC by agc01@agccert.com.

APPENDIX A. SAR SYSTEM CHECK DATA

Test Laboratory: AGC Lab **Test date: Nov. 28, 2023**
System Check Head 450MHz
DUT: Dipole 450 MHz Type: D450V3
Communication System: CW; Communication System Band: CW; Duty Cycle: 1:1;
Frequency: 450MHz; Medium parameters used: f = 450MHz; σ= 0.85 mho/m; εr =42.93 ; ρ = 1000 kg/m³ ;
Phantom Type: Elliptical Phantom; Input Power=18dBm
Ambient temperature (℃): 21.4, Liquid temperature (℃): 21.1

DASY Configuration:
• Probe: ES3DV3-SN:3337; ConvF(7.53, 7.53, 7.53); Calibrated: Oct. 14, 2023;
• Sensor-Surface: 3mm (Mechanical Surface Detection), z = 1.0,
• Electronics: DAE4 SN1398; Calibrated: May 17, 2023
• Phantom: ELI v5.0; Type: QDOVA002AA; Serial: TP:1108
• DASY52 52.8.7(1137); SEMCAD X 14.6.10(7164)

Head/System Check /Area Scan (8x23x1): Measurement grid: dx=15mm, dy=15mm
Maximum value of SAR (measured) = 0.329 W/kg
Head/System Check /Zoom Scan (5x5x7)/Cube 0: Measurement grid: dx=8mm, dy=8mm, dz=5mm
Reference Value = 18.493 V/m; Power Drift = -0.15 dB
Peak SAR (extrapolated) = 0.418W/kg
SAR(1 g) = 0.287 W/kg; SAR(10 g) = 0.198 W/kg
Maximum value of SAR (measured) = 0.344 W/kg

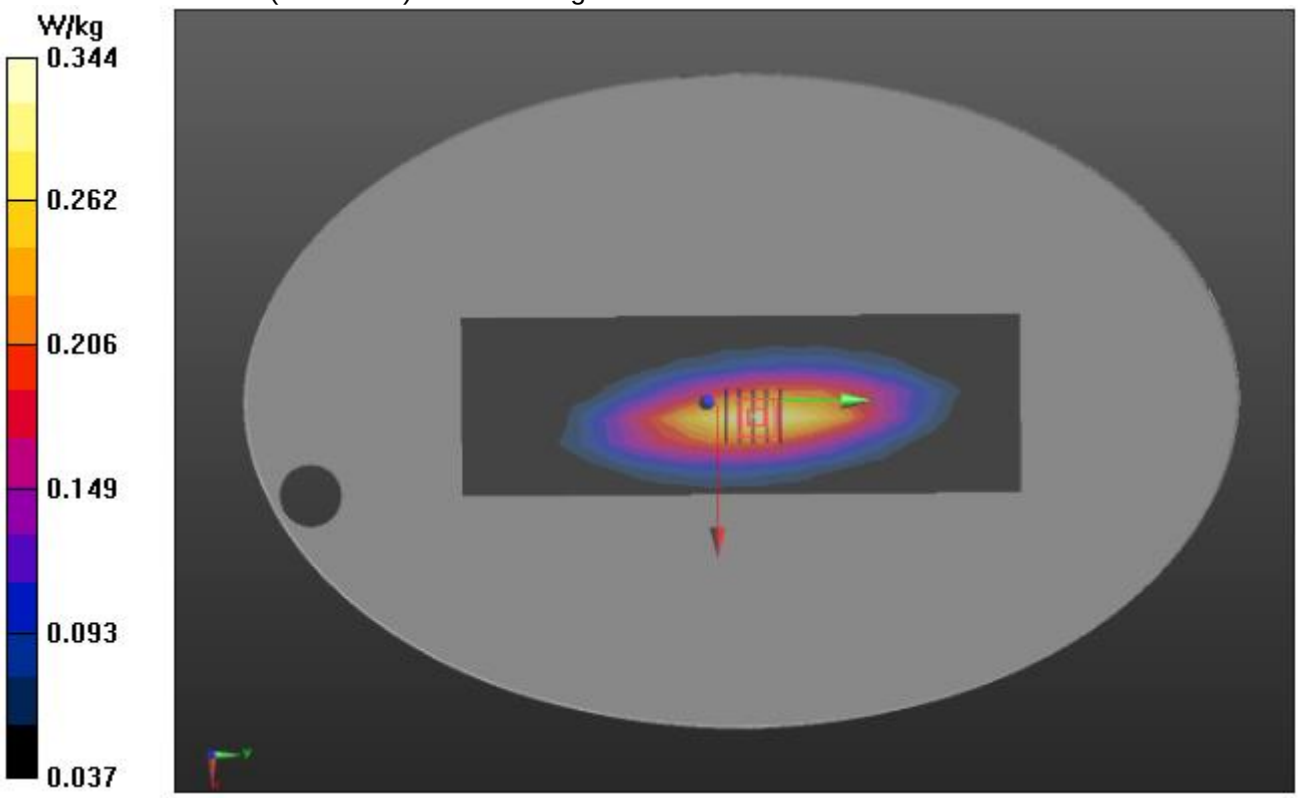

Any report having not been signed by authorized approver, or having been altered without authorization, or having not been stamped by the "Dedicated Testing/Inspection Stamp" is deemed to be invalid. Copying or excerpting portion of, or altering the content of the report is not permitted without the written authorization of AGC. The test results presented in the report apply only to the tested sample. Any objections to report issued by AGC should be submitted to AGC within 15days after the issuance of the test report. Further enquiry of validity or verification of the test report should be addressed to AGC by agc01@agccert.com.

APPENDIX B. SAR MEASUREMENT DATA

Test Laboratory: AGC Lab **Date: Nov. 28, 2023**
450 Mid- face up 2.5cm (12.5 KHz)
DUT: Two-Way Radio; Type: M9

Communication System: 450; Communication System Band: D450 (450.0 MHz); Duty Cycle: 1:1;
Frequency:450.025 MHz; Medium parameters used: f = 450MHz; σ= 0.85 mho/m; εr =42.93; ρ= 1000 kg/m³ ;
Phantom Type: Elliptical Phantom
Ambient temperature (℃): 21.4, Liquid temperature (℃): 21.1

DASY Configuration:
• Probe: ES3DV3-SN:3337; ConvF(7.53, 7.53, 7.53); Calibrated: Oct. 14, 2023;
• Sensor-Surface: 3mm (Mechanical Surface Detection), z = 1.0,
• Electronics: DAE4 SN1398; Calibrated: May 17, 2023
• Phantom: ELI v5.0; Type: QDOVA002AA; Serial: TP:1108
• DASY52 52.8.7(1137); SEMCAD X 14.6.10(7164)

HOLD TO FACE/A-12.5K-FACE UP-25MM/Area Scan (7x13x1): Measurement grid: dx=15mm, dy=15mm
Maximum value of SAR (measured) = 0.467 W/kg
HOLD TO FACE/A-12.5K-FACE UP-25MM/Zoom Scan (5x5x7)/Cube 0: Measurement grid: dx=8mm, dy=8mm, dz=5mm
Reference Value = 23.698 V/m; Power Drift = -1.04 dB
Peak SAR (extrapolated) = 0.560 W/kg
SAR(1 g) = 0.383 W/kg; SAR(10 g) = 0.275 W/kg
Maximum value of SAR (measured) = 0.431 W/kg

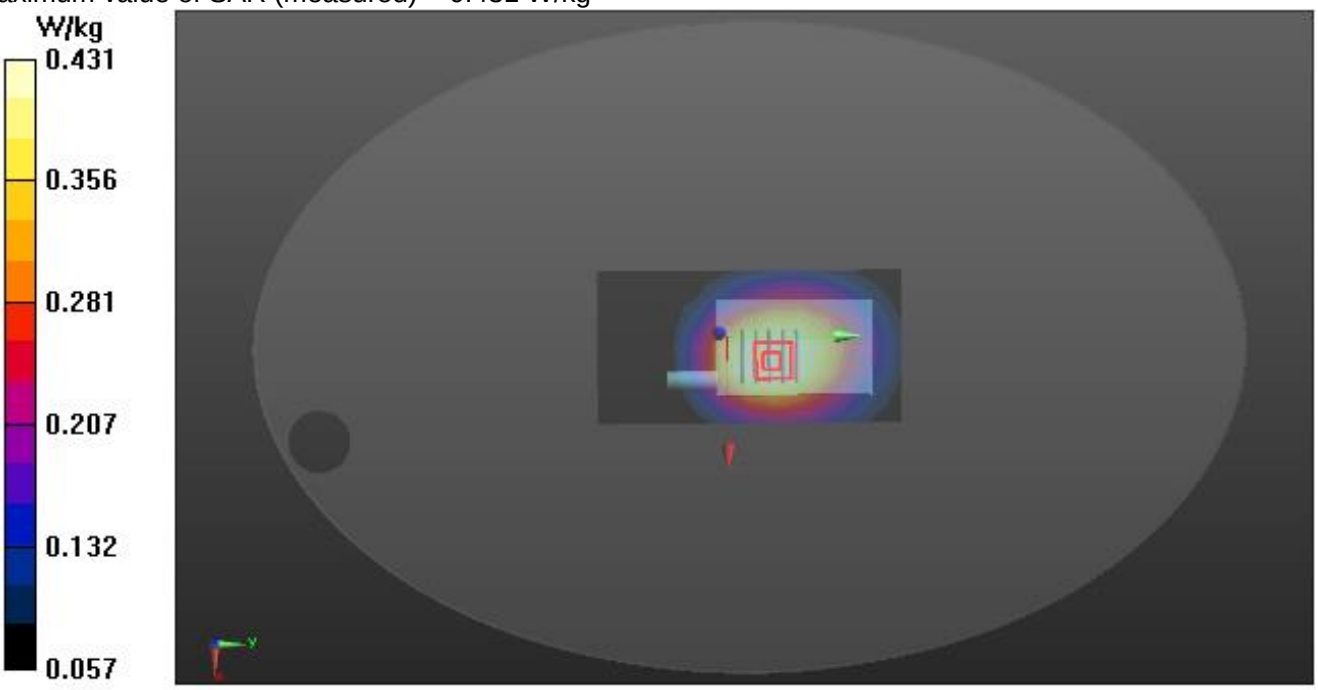

Any report having not been signed by authorized approver, or having been altered without authorization, or having not been stamped by the "Dedicated Testing/Inspection Stamp" is deemed to be invalid. Copying or excerpting portion of, or altering the content of the report is not permitted without the written authorization of AGC. The test results presented in the report apply only to the tested sample. Any objections to report issued by AGC should be submitted to AGC within 15days after the issuance of the test report. Further enquiry of validity or verification of the test report should be addressed to AGC by agc01@agccert.com.

Test Laboratory: AGC Lab **Date: Nov. 28, 2023**
450 Mid -Body-Back with all accessories 0mm (12.5 KHz)
DUT: Two-Way Radio; Type: M9

Communication System: 450; Communication System Band: D450 (450.0 MHz); Duty Cycle: 1:1;
Frequency:450.025 MHz; Medium parameters used: f = 450 MHz; σ= 0.85 mho/m; εr =42.93; ρ= 1000 kg/m ;
Phantom Type: Elliptical Phantom
Ambient temperature (℃): 21.4, Liquid temperature (℃): 21.1

DASY Configuration:
• Probe: ES3DV3-SN:3337; ConvF(7.53, 7.53, 7.53); Calibrated: Oct. 14, 2023;
• Sensor-Surface: 3mm (Mechanical Surface Detection), z = 1.0,
• Electronics: DAE4 SN1398; Calibrated: May 17, 2023
• Phantom: ELI v5.0; Type: QDOVA002AA; Serial: TP:1108
• DASY52 52.8.7(1137); SEMCAD X 14.6.10(7164)

BODY/A-12.5K-BACK with all accessories-0MM/Area Scan (7x13x1): Measurement grid: dx=15mm, dy=15mm
Maximum value of SAR (measured) = 3.87 W/kg
BODY/A-12.5K-BACK with all accessories-0MM/Zoom Scan (5x5x7)/Cube 0: Measurement grid: dx=8mm, dy=8mm, dz=5mm
Reference Value = 48.542 V/m; Power Drift = -1.58 dB
Peak SAR (extrapolated) = 9.63 W/kg
SAR(1 g) = 2.79 W/kg; SAR(10 g) = 1.19 W/kg
Maximum value of SAR (measured) = 3.56 W/kg

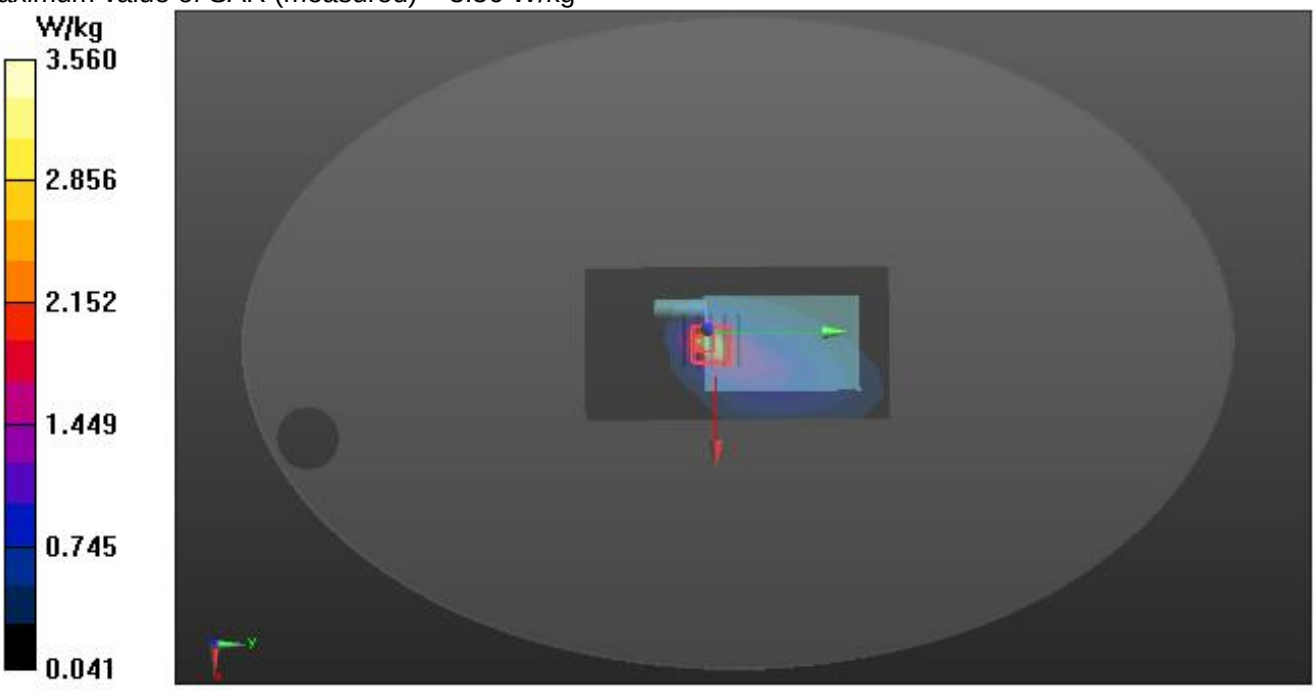

Any report having not been signed by authorized approver, or having been altered without authorization, or having not been stamped by the "Dedicated Testing/Inspection Stamp" is deemed to be invalid. Copying or excerpting portion of, or altering the content of the report is not permitted without the written authorization of AGC. The test results presented in the report apply only to the tested sample. Any objections to report issued by AGC should be submitted to AGC within 15days after the issuance of the test report. Further enquiry of validity or verification of the test report should be addressed to AGC by agc01@agccert.com.

APPENDIX C. TEST SETUP PHOTOGRAPHS

Face Up with 2.5 cm Separation Distance.

Body Back Touch with all accessories

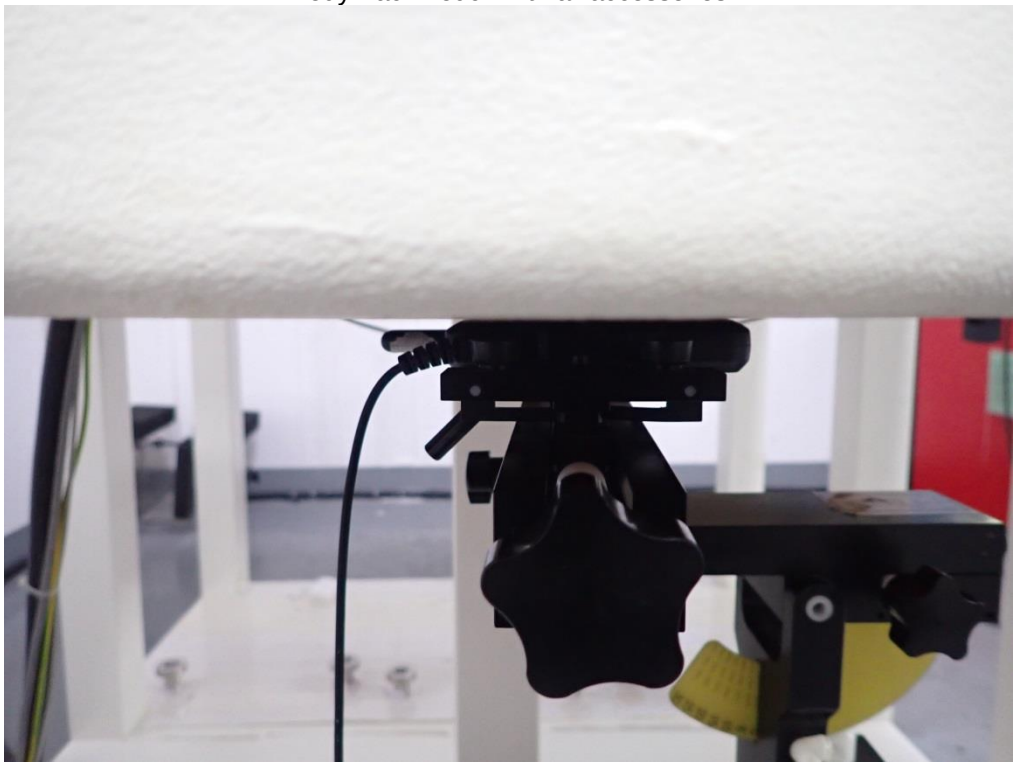

The thickness of EUT is 1.8 cm

Any report having not been signed by authorized approver, or having been altered without authorization, or having not been stamped by the "Dedicated Testing/Inspection Stamp" is deemed to be invalid. Copying or excerpting portion of, or altering the content of the report is not permitted without the written authorization of AGC. The test results presented in the report apply only to the tested sample. Any objections to report issued by AGC should be submitted to AGC within 15days after the issuance of the test report. Further enquiry of validity or verification of the test report should be addressed to AGC by agc01@agccert.com.

Note : The headset is just for testing. This tested and electrically similar headsets may be used.

Any report having not been signed by authorized approver, or having been altered without authorization, or having not been stamped by the "Dedicated Testing/Inspection Stamp" is deemed to be invalid. Copying or excerpting portion of, or altering the content of the report is not permitted without the written authorization of AGC. The test results presented in the report apply only to the tested sample. Any objections to report issued by AGC should be submitted to AGC within 15days after the issuance of the test report. Further enquiry of validity or verification of the test report should be addressed to AGC by agc01@agccert.com.

DEPTH OF THE LIQUID IN THE PHANTOM—ZOOM IN

Note：The position used in the measurement was according to IEEE 1528-2013

450MHz Body phantom
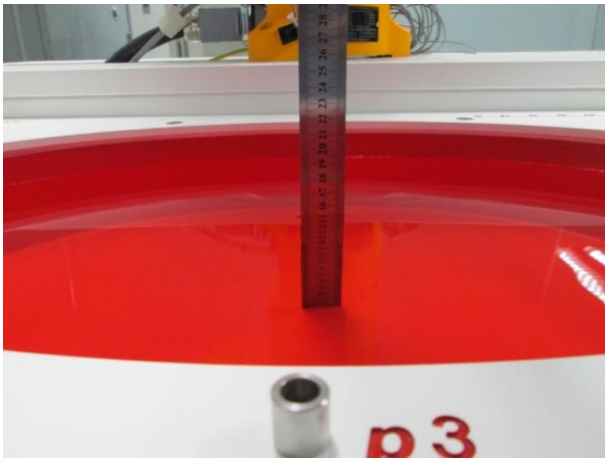

Any report having not been signed by authorized approver, or having been altered without authorization, or having not been stamped by the "Dedicated Testing/Inspection Stamp" is deemed to be invalid. Copying or excerpting portion of, or altering the content of the report is not permitted without the written authorization of AGC. The test results presented in the report apply only to the tested sample. Any objections to report issued by AGC should be submitted to AGC within 15days after the issuance of the test report. Further enquiry of validity or verification of the test report should be addressed to AGC by agc01@agccert.com.

APPENDIX D. CALIBRATION DATA

Refer to Attached files.

----END OF REPORT----

Any report having not been signed by authorized approver, or having been altered without authorization, or having not been stamped by the "Dedicated Testing/Inspection Stamp" is deemed to be invalid. Copying or excerpting portion of, or altering the content of the report is not permitted without the written authorization of AGC. The test results presented in the report apply only to the tested sample. Any objections to report issued by AGC should be submitted to AGC within 15days after the issuance of the test report. Further enquiry of validity or verification of the test report should be addressed to AGC by agc01@agccert.com.

Conditions of Issuance of Test Reports

1. All samples and goods are accepted by the Attestation of Global Compliance (Shenzhen) Co., Ltd (the "Company") solely for testing and reporting in accordance with the following terms and conditions. The company provides its services on the basis that such terms and conditions constitute express agreement between the company and any person, firm or company requesting its services (the "Clients").

2. Any report issued by Company as a result of this application for testing services (the "Report") shall be issued in confidence to the Clients and the Report will be strictly treated as such by the Company. It may not be reproduced either in its entirety or in part and it may not be used for advertising or other unauthorized purposes without the written consent of the Company. The Clients to whom the Report is issued may, however, show or send it, or a certified copy thereof prepared by the Company to its customer, supplier or other persons directly concerned. The Company will not, without the consent of the Clients, enter into any discussion or correspondence with any third party concerning the contents of the Report, unless required by the relevant governmental authorities, laws or court orders.

3.The Company shall not be called or be liable to be called to give evidence or testimony on the Report in a court of law without its prior written consent, unless required by the relevant governmental authorities, laws or court orders.

4. In the event of the improper use of the report as determined by the Company, the Company reserves the right to withdraw it, and to adopt any other additional remedies which may be appropriate.

5. Samples submitted for testing are accepted on the understanding that the Report issued cannot form the basis of, or be the instrument for, any legal action against the Company.

6. The Company will not be liable for or accept responsibility for any loss or damage however arising from the use of information contained in any of its Reports or in any communication whatsoever about its said tests or investigations.

7.Clients wishing to use the Report in court proceedings or arbitration shall inform the Company to that effect prior to submitting the sample for testing.

8. The Company is not responsible for recalling the electronic version of the original report when any revision is made to them. The Client assumes the responsibility to providing the revised version to any interested party who uses them.

9. Subject to the variable length of retention time for test data and report stored hereinto as otherwise specifically required by individual accreditation authorities, the Company will only keep the supporting test data and information of the test report for a period of six years. The data and information will be disposed of after the aforementioned retention period has elapsed. Under no circumstances shall we provide any data and information which has been disposed of after retention period. Under no circumstances shall we be liable for damage of any kind, including (but not limited to) compensatory damages, lost profits, lost data, or any form of special, incidental, indirect, consequential or punitive damages of any kind, whether based on breach of contract of warranty, tort (including negligence), product liability or otherwise, even if we are informed in advance of the possibility of such damages.

Any report having not been signed by authorized approver, or having been altered without authorization, or having not been stamped by the "Dedicated Testing/Inspection Stamp" is deemed to be invalid. Copying or excerpting portion of, or altering the content of the report is not permitted without the written authorization of AGC. The test results presented in the report apply only to the tested sample. Any objections to report issued by AGC should be submitted to AGC within 15days after the issuance of the test report. Further enquiry of validity or verification of the test report should be addressed to AGC by agc01@agccert.com.