Test Laboratory: UnionTrust Date: 2020/5/26

## System Check_H750

### DUT: Dipole 750 MHz

Communication System: CW; Frequency: 750 MHz;Duty Cycle: 1:1
Medium: H750 Medium parameters used: f = 750 MHz; $\sigma$ = 0.896 mho/m; $\varepsilon_r$ = 40.3; $\rho$ = 1000 kg/m$^3$

DASY4 Configuration:
- Probe: ES3DV3 - SN3090; ConvF(6.24, 6.24, 6.24); Calibrated: 2020/5/9
- Sensor-Surface: 3mm (Mechanical Surface Detection)
- Electronics: DAE4 Sn662; Calibrated: 2020/5/6
- Phantom: SAM 1; Type: QD 000 P40 CB; Serial: TP/1378
- ; Postprocessing SW: SEMCAD, V1.8 Build 186

**system check/Area Scan (51x81x1):** Measurement grid: dx=15mm, dy=15mm
Maximum value of SAR (interpolated) = 0.078 mW/g

**system check/Zoom Scan (5x5x7)/Cube 0:** Measurement grid: dx=8mm, dy=8mm, dz=5mm
Reference Value = 8.41 V/m; Power Drift = 0.099 dB
Peak SAR (extrapolated) = 0.101 W/kg
**SAR(1 g) = 0.078 mW/g; SAR(10 g) = 0.046 mW/g**
Maximum value of SAR (measured) = 0.079 mW/g

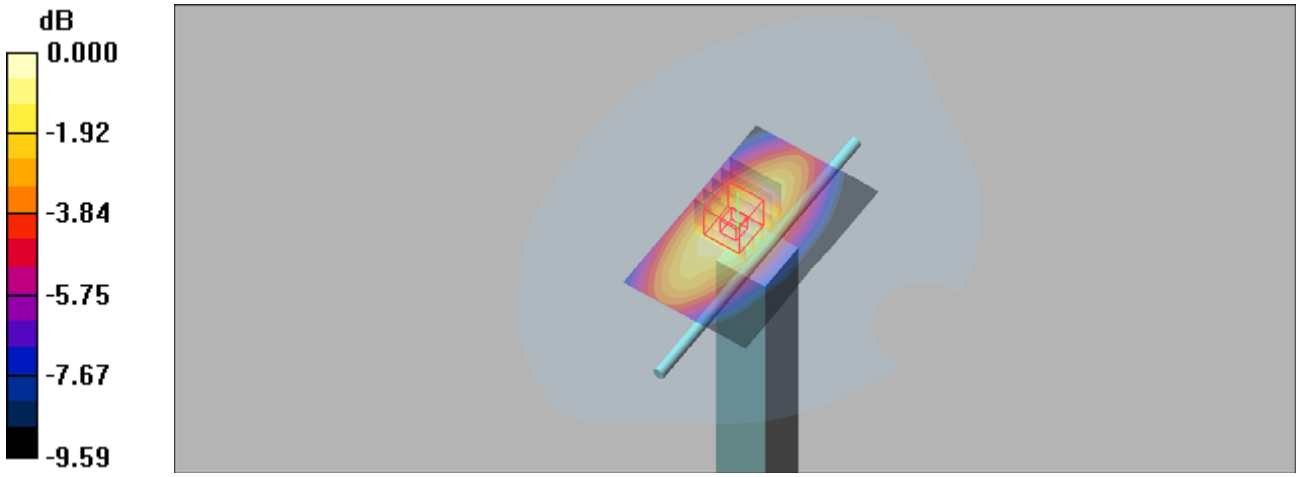


0 dB = 0.079mW/g

Test Laboratory: UnionTrust Date: 2020/5/26

## System Check_H835

### DUT: Dipole 835 MHz

Communication System: CW; Frequency: 835 MHz;Duty Cycle: 1:1
Medium: H835 Medium parameters used: f = 835 MHz; $\sigma$ = 0.919 mho/m; $\varepsilon_r$ = 43.2; $\rho$ = 1000 kg/m$^3$

DASY4 Configuration:
- Probe: ES3DV3 - SN3090; ConvF(6.13, 6.13, 6.13); Calibrated: 2020/5/9
- Sensor-Surface: 3mm (Mechanical Surface Detection)
- Electronics: DAE4 Sn662; Calibrated: 2020/5/6
- Phantom: SAM 1; Type: QD 000 P40 CB; Serial: TP/1378
- ; Postprocessing SW: SEMCAD, V1.8 Build 186

**system check/Area Scan (51x101x1):** Measurement grid: dx=15mm, dy=15mm
Maximum value of SAR (interpolated) = 0.121 mW/g

**system check/Zoom Scan (5x5x7)/Cube 0:** Measurement grid: dx=8mm, dy=8mm, dz=5mm
Reference Value = 10.1 V/m; Power Drift = -0.011 dB
Peak SAR (extrapolated) = 0.152 W/kg
**SAR(1 g) = 0.096 mW/g; SAR(10 g) = 0.071 mW/g**
Maximum value of SAR (measured) = 0.124 mW/g

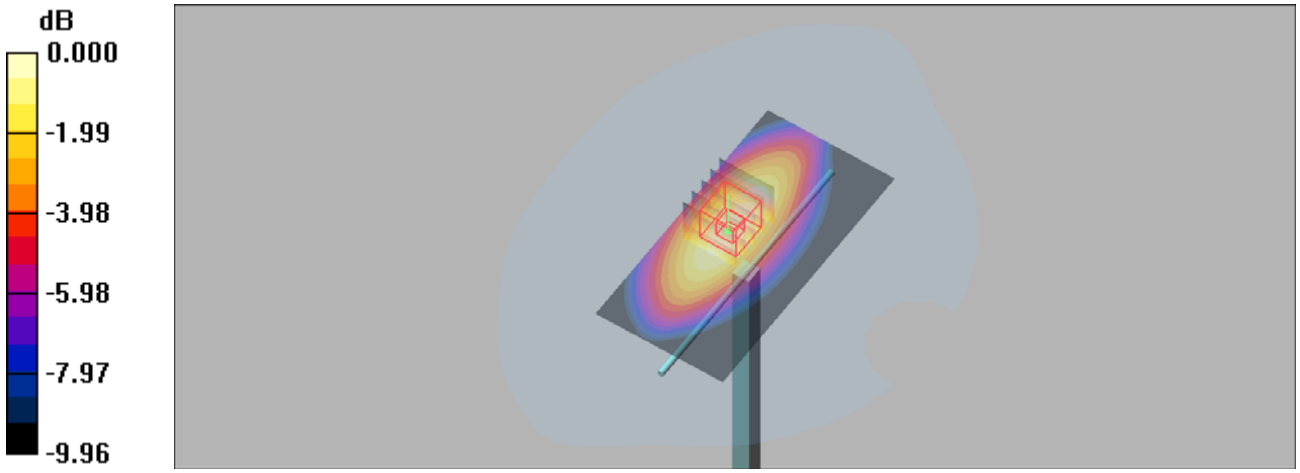


0 dB = 0.124mW/g

Test Laboratory: UnionTrust Date: 2020/5/27

## System Check_H835

### DUT: Dipole 835 MHz

Communication System: CW; Frequency: 835 MHz;Duty Cycle: 1:1
Medium: H835 Medium parameters used: f = 835 MHz; $\sigma$ = 0.919 mho/m; $\varepsilon_r$ = 43.2; $\rho$ = 1000 kg/m$^3$

DASY4 Configuration:
- Probe: ES3DV3 - SN3090; ConvF(6.13, 6.13, 6.13); Calibrated: 2020/5/9
- Sensor-Surface: 3mm (Mechanical Surface Detection)
- Electronics: DAE4 Sn662; Calibrated: 2020/5/6
- Phantom: SAM 1; Type: QD 000 P40 CB; Serial: TP/1378
- ; Postprocessing SW: SEMCAD, V1.8 Build 186

**system check/Area Scan (51x101x1):** Measurement grid: dx=15mm, dy=15mm
Maximum value of SAR (interpolated) = 0.117 mW/g

**system check/Zoom Scan (5x5x7)/Cube 0:** Measurement grid: dx=8mm, dy=8mm, dz=5mm
Reference Value = 8.02 V/m; Power Drift = 0.164 dB
Peak SAR (extrapolated) = 0.152 W/kg
**SAR(1 g) = 0.100 mW/g; SAR(10 g) = 0.065 mW/g**
Maximum value of SAR (measured) = 0.118 mW/g

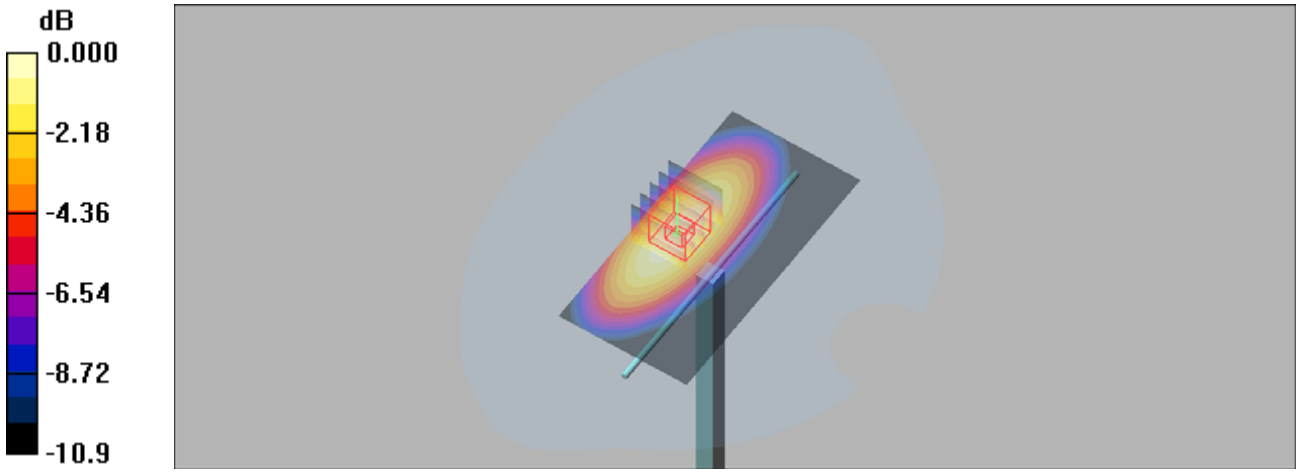


0 dB = 0.118mW/g

Test Laboratory: UnionTrust Date: 2020/5/29

## System Check_H835

### DUT: Dipole 835 MHz

Communication System: CW; Frequency: 835 MHz;Duty Cycle: 1:1
Medium: H835 Medium parameters used: f = 835 MHz; $\sigma$ = 0.916 mho/m; $\varepsilon_r$ = 42.7; $\rho$ = 1000 kg/m$^3$

DASY4 Configuration:
- Probe: ES3DV3 - SN3090; ConvF(6.13, 6.13, 6.13); Calibrated: 2020/5/9
- Sensor-Surface: 3mm (Mechanical Surface Detection)
- Electronics: DAE4 Sn662; Calibrated: 2020/5/6
- Phantom: SAM 1; Type: QD 000 P40 CB; Serial: TP/1378
- ; Postprocessing SW: SEMCAD, V1.8 Build 186

**system check/Area Scan (51x101x1):** Measurement grid: dx=15mm, dy=15mm
Maximum value of SAR (interpolated) = 0.121 mW/g

**system check/Zoom Scan (5x5x7)/Cube 0:** Measurement grid: dx=8mm, dy=8mm, dz=5mm
Reference Value = 10.1 V/m; Power Drift = -0.011 dB
Peak SAR (extrapolated) = 0.152 W/kg
**SAR(1 g) = 0.099 mW/g; SAR(10 g) = 0.067 mW/g**
Maximum value of SAR (measured) = 0.119 mW/g

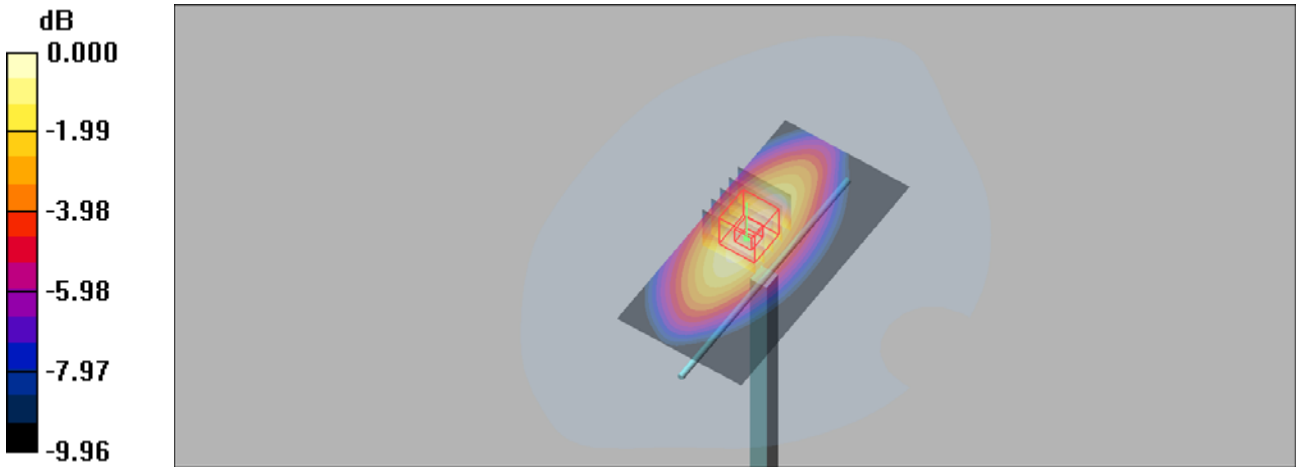


0 dB = 0.119mW/g

Test Laboratory: UnionTrust Date: 2020/6/5

## System Check_H835

### DUT: Dipole 835 MHz

Communication System: CW; Frequency: 835 MHz;Duty Cycle: 1:1
Medium: H835 Medium parameters used: f = 835 MHz; $\sigma$ = 0.919 mho/m; $\varepsilon_r$ = 43.2; $\rho$ = 1000 kg/m$^3$

DASY4 Configuration:
- Probe: ES3DV3 - SN3090; ConvF(6.13, 6.13, 6.13); Calibrated: 2020/5/9
- Sensor-Surface: 3mm (Mechanical Surface Detection)
- Electronics: DAE4 Sn662; Calibrated: 2020/5/6
- Phantom: SAM 1; Type: QD 000 P40 CB; Serial: TP/1378
- ; Postprocessing SW: SEMCAD, V1.8 Build 186

**system check/Area Scan (51x101x1):** Measurement grid: dx=15mm, dy=15mm
Maximum value of SAR (interpolated) = 0.121 mW/g

**system check/Zoom Scan (5x5x7)/Cube 0:** Measurement grid: dx=8mm, dy=8mm, dz=5mm
Reference Value = 10.1 V/m; Power Drift = -0.011 dB
Peak SAR (extrapolated) = 0.152 W/kg
**SAR(1 g) = 0.101 mW/g; SAR(10 g) = 0.07 mW/g**
Maximum value of SAR (measured) = 0.123 mW/g

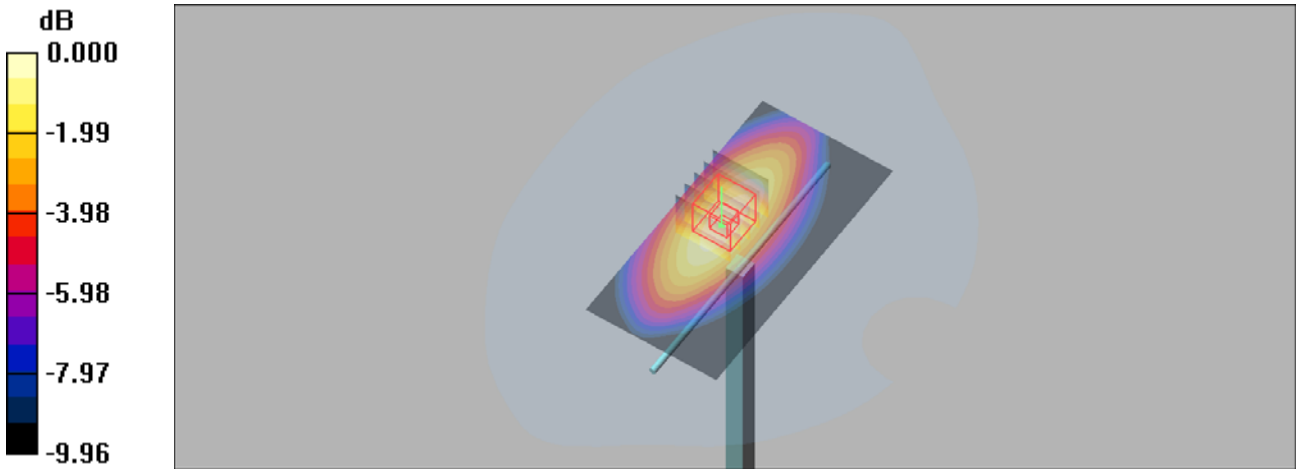


0 dB = 0.123mW/g

Test Laboratory: UnionTrust Date: 2020/5/26

## System Check_H1750

### DUT: Dipole 1750 MHz

Communication System: CW; Frequency: 1750 MHz;Duty Cycle: 1:1
Medium: H1750 Medium parameters used: f = 1750 MHz; σ = 1.38 mho/m; $\varepsilon_r$ = 39.3; ρ = 1000 kg/m$^3$

DASY4 Configuration:
- Probe: ES3DV3 - SN3090; ConvF(5.38, 5.38, 5.38); Calibrated: 2020/5/9
- Sensor-Surface: 3mm (Mechanical Surface Detection)
- Electronics: DAE4 Sn662; Calibrated: 2020/5/6
- Phantom: SAM 2; Type: QD 000 P40 CB; Serial: TP-1376
- ; Postprocessing SW: SEMCAD, V1.8 Build 186

**system check/Area Scan (51x71x1):** Measurement grid: dx=15mm, dy=15mm
Maximum value of SAR (interpolated) = 0.476 mW/g

**system check/Zoom Scan (5x5x7)/Cube 0:** Measurement grid: dx=8mm, dy=8mm, dz=5mm
Reference Value = 11.3 V/m; Power Drift = 0.302 dB
Peak SAR (extrapolated) = 0.752 W/kg
**SAR(1 g) = 0.380 mW/g; SAR(10 g) = 0.191 mW/g**
Maximum value of SAR (measured) = 0.493 mW/g

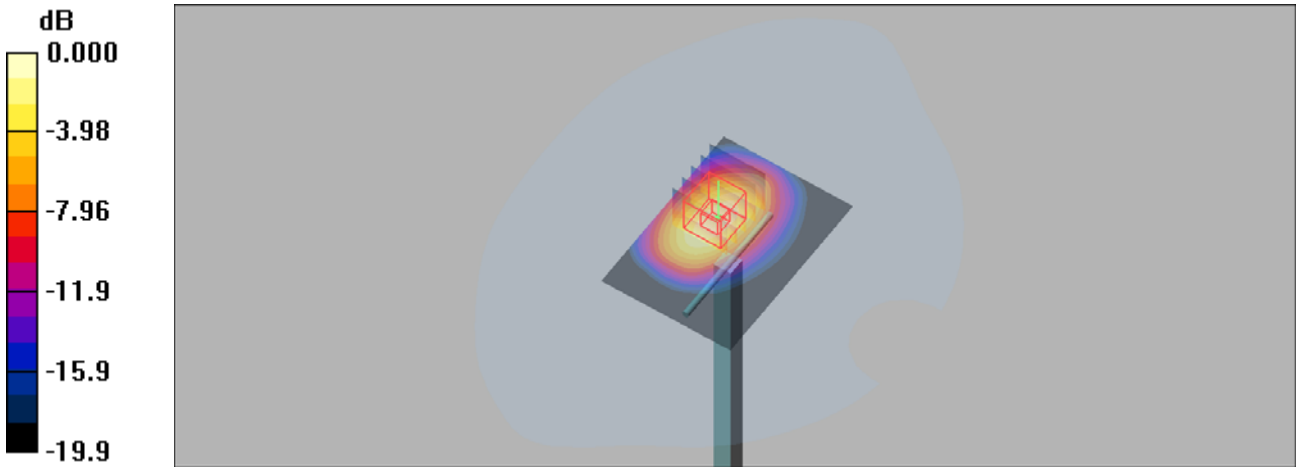


0 dB = 0.493mW/g

Test Laboratory: UnionTrust Date: 2020/5/29

## System Check_H1750

### DUT: Dipole 1750 MHz

Communication System: CW; Frequency: 1750 MHz;Duty Cycle: 1:1
Medium: H1750 Medium parameters used: f = 1750 MHz; σ = 1.34 mho/m; $\varepsilon_r$ = 41.8; ρ = 1000 kg/m$^3$

DASY4 Configuration:
- Probe: ES3DV3 - SN3090; ConvF(5.38, 5.38, 5.38); Calibrated: 2020/5/9
- Sensor-Surface: 3mm (Mechanical Surface Detection)
- Electronics: DAE4 Sn662; Calibrated: 2020/5/6
- Phantom: SAM 2; Type: QD 000 P40 CB; Serial: TP-1376
- ; Postprocessing SW: SEMCAD, V1.8 Build 186

**system check/Area Scan (51x71x1):** Measurement grid: dx=15mm, dy=15mm
Maximum value of SAR (interpolated) = 0.462 mW/g

**system check/Zoom Scan (5x5x7)/Cube 0:** Measurement grid: dx=8mm, dy=8mm, dz=5mm
Reference Value = 11.3 V/m; Power Drift = 0.302 dB
Peak SAR (extrapolated) = 0.730 W/kg
**SAR(1 g) = 0.369 mW/g; SAR(10 g) = 0.186 mW/g**
Maximum value of SAR (measured) = 0.479 mW/g

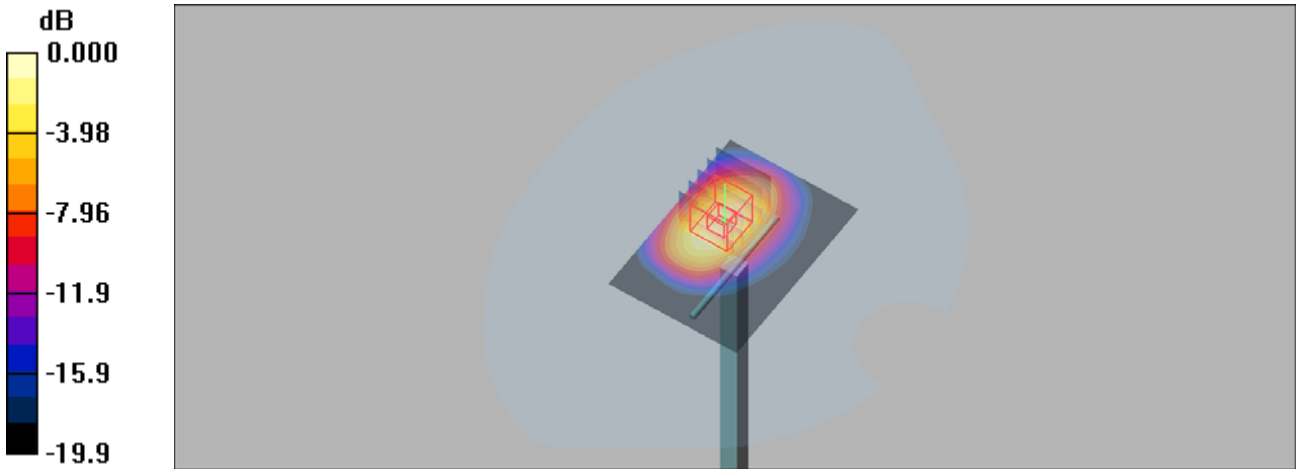


0 dB = 0.479mW/g

Test Laboratory: UnionTrust Date: 2020/6/2

## System Check_H1750

### DUT: Dipole 1750 MHz

Communication System: CW; Frequency: 1750 MHz;Duty Cycle: 1:1
Medium: H1750 Medium parameters used: f = 1750 MHz; σ = 1.35 mho/m; $\varepsilon_r$ = 39.5; ρ = 1000 kg/m$^3$

DASY4 Configuration:
- Probe: ES3DV3 - SN3090; ConvF(5.38, 5.38, 5.38); Calibrated: 2020/5/9
- Sensor-Surface: 3mm (Mechanical Surface Detection)
- Electronics: DAE4 Sn662; Calibrated: 2020/5/6
- Phantom: SAM 2; Type: QD 000 P40 CB; Serial: TP-1376
- ; Postprocessing SW: SEMCAD, V1.8 Build 186

**system check/Area Scan (51x71x1):** Measurement grid: dx=15mm, dy=15mm
Maximum value of SAR (interpolated) = 0.464 mW/g

**system check/Zoom Scan (5x5x7)/Cube 0:** Measurement grid: dx=8mm, dy=8mm, dz=5mm
Reference Value = 11.3 V/m; Power Drift = 0.302 dB
Peak SAR (extrapolated) = 0.733 W/kg
**SAR(1 g) = 0.371 mW/g; SAR(10 g) = 0.187 mW/g**
Maximum value of SAR (measured) = 0.481 mW/g

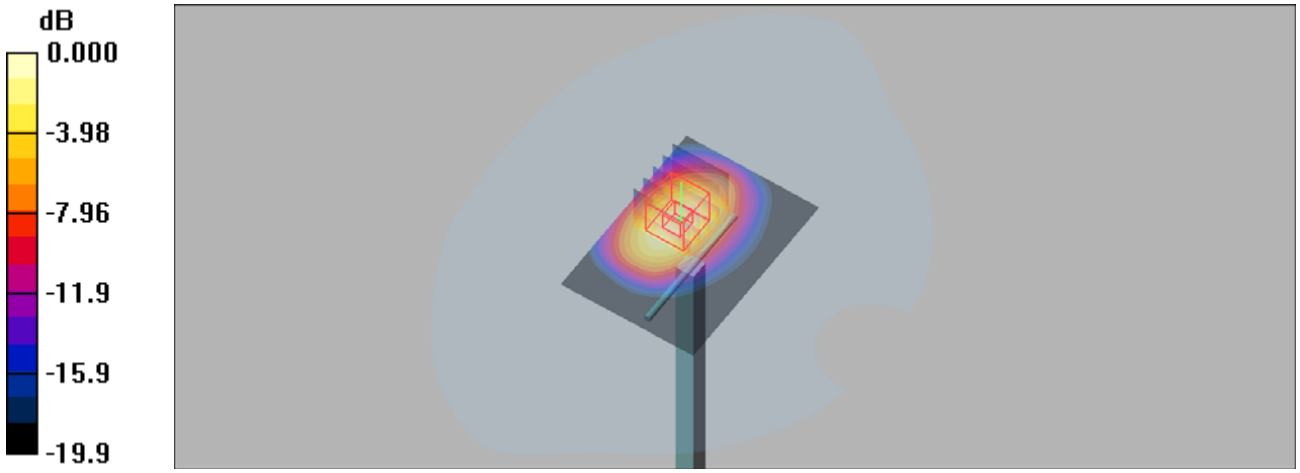


0 dB = 0.481mW/g

Test Laboratory: UnionTrust Date: 2020/5/26

## System Check_H1900

### DUT: Dipole 1900 MHz

Communication System: CW; Frequency: 1900 MHz;Duty Cycle: 1:1
Medium: H1900 Medium parameters used (interpolated): f = 1900 MHz; $\sigma$ = 1.4 mho/m; $\varepsilon_r$ = 38.6; $\rho$ = 1000 kg/m$^3$

DASY4 Configuration:
- Probe: ES3DV3 - SN3090; ConvF(5.1, 5.1, 5.1); Calibrated: 2020/5/9
- Sensor-Surface: 3mm (Mechanical Surface Detection)
- Electronics: DAE4 Sn662; Calibrated: 2020/5/6
- Phantom: SAM 2; Type: QD 000 P40 CB; Serial: TP-1376
- ; Postprocessing SW: SEMCAD, V1.8 Build 186

**system check/Area Scan (51x71x1):** Measurement grid: dx=15mm, dy=15mm
Maximum value of SAR (interpolated) = 0.536 mW/g

**system check/Zoom Scan (5x5x7)/Cube 0:** Measurement grid: dx=8mm, dy=8mm, dz=5mm
Reference Value = 12.7 V/m; Power Drift = 0.315 dB
Peak SAR (extrapolated) = 0.855 W/kg
**SAR(1 g) = 0.418 mW/g; SAR(10 g) = 0.205 mW/g**
Maximum value of SAR (measured) = 0.547 mW/g

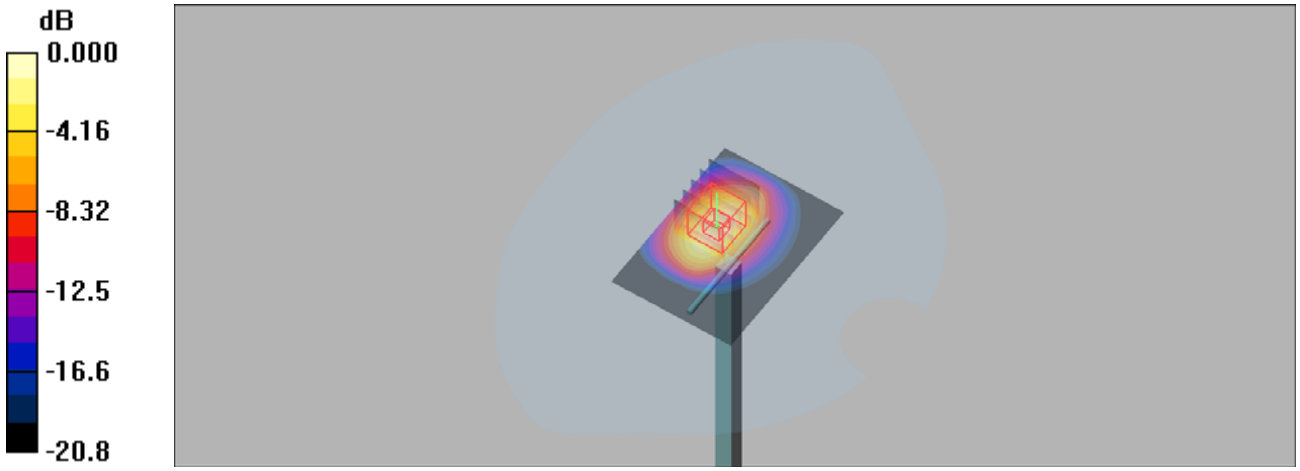


0 dB = 0.547mW/g

Test Laboratory: UnionTrust Date: 2020/5/27

## System Check_H1900

### DUT: Dipole 1900 MHz

Communication System: CW; Frequency: 1900 MHz;Duty Cycle: 1:1
Medium: H1900 Medium parameters used (interpolated): f = 1900 MHz; $\sigma$ = 1.4 mho/m; $\varepsilon_r$ = 38.6; $\rho$ = 1000 kg/m$^3$

DASY4 Configuration:
- Probe: ES3DV3 - SN3090; ConvF(5.1, 5.1, 5.1); Calibrated: 2020/5/9
- Sensor-Surface: 3mm (Mechanical Surface Detection)
- Electronics: DAE4 Sn662; Calibrated: 2020/5/6
- Phantom: SAM 2; Type: QD 000 P40 CB; Serial: TP-1376
- ; Postprocessing SW: SEMCAD, V1.8 Build 186

**system check/Area Scan (51x71x1):** Measurement grid: dx=15mm, dy=15mm
Maximum value of SAR (interpolated) = 0.536 mW/g

**system check/Zoom Scan (5x5x7)/Cube 0:** Measurement grid: dx=8mm, dy=8mm, dz=5mm
Reference Value = 12.7 V/m; Power Drift = 0.315 dB
Peak SAR (extrapolated) = 0.855 W/kg
**SAR(1 g) = 0.416 mW/g; SAR(10 g) = 0.207 mW/g**
Maximum value of SAR (measured) = 0.547 mW/g

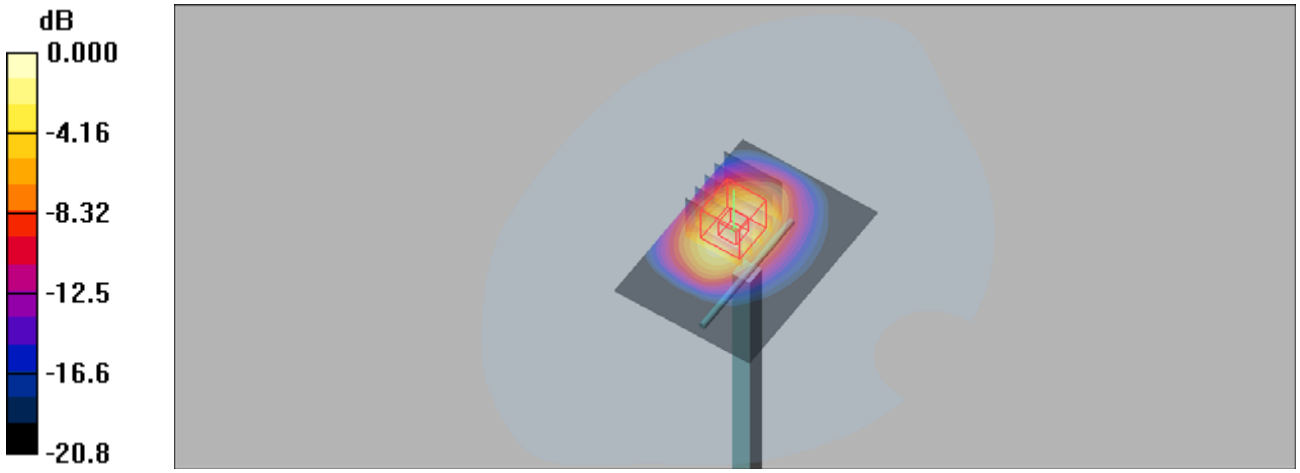


0 dB = 0.547mW/g

Test Laboratory: UnionTrust Date: 2020/5/28

## System Check_H1900

### DUT: Dipole 1900 MHz

Communication System: CW; Frequency: 1900 MHz;Duty Cycle: 1:1
Medium: H1900 Medium parameters used: f = 1900 MHz; $\sigma$ = 1.44 mho/m; $\varepsilon_r$ = 39.7; $\rho$ = 1000 kg/m$^3$

DASY4 Configuration:
- Probe: ES3DV3 - SN3090; ConvF(5.1, 5.1, 5.1); Calibrated: 2020/5/9
- Sensor-Surface: 3mm (Mechanical Surface Detection)
- Electronics: DAE4 Sn662; Calibrated: 2020/5/6
- Phantom: SAM 2; Type: QD 000 P40 CB; Serial: TP-1376
- ; Postprocessing SW: SEMCAD, V1.8 Build 186

**system check/Area Scan (51x71x1):** Measurement grid: dx=15mm, dy=15mm
Maximum value of SAR (interpolated) = 0.553 mW/g

**system check/Zoom Scan (5x5x7)/Cube 0:** Measurement grid: dx=8mm, dy=8mm, dz=5mm
Reference Value = 12.7 V/m; Power Drift = 0.315 dB
Peak SAR (extrapolated) = 0.883 W/kg
**SAR(1 g) = 0.432 mW/g; SAR(10 g) = 0.211 mW/g**
Maximum value of SAR (measured) = 0.565 mW/g

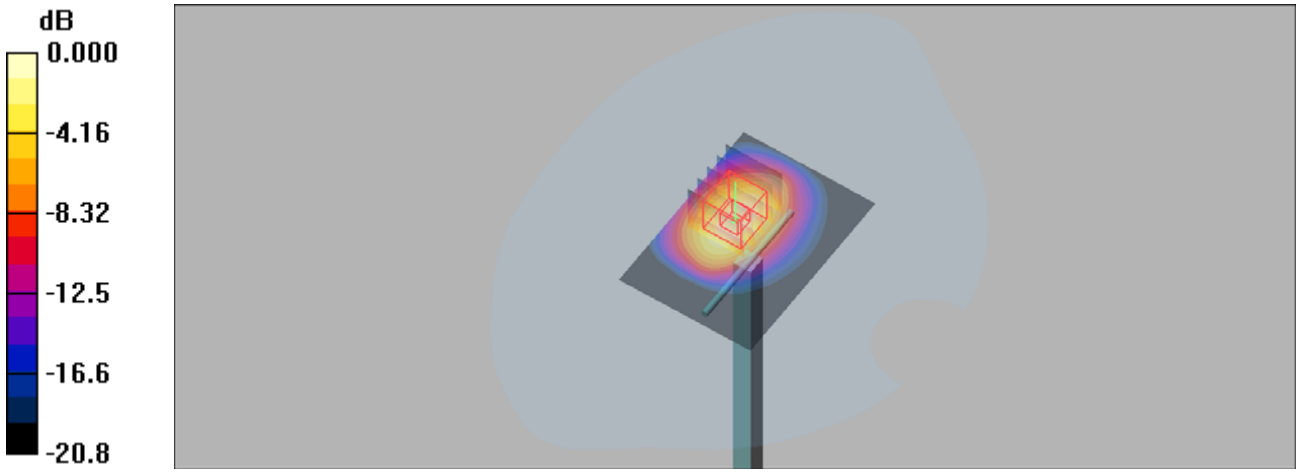


0 dB = 0.565mW/g

Test Laboratory: UnionTrust Date: 2020/5/25

## System Check_H2300

### DUT: Dipole 2300 MHz

Communication System: CW; Frequency: 2300 MHz;Duty Cycle: 1:1
Medium: H2300 Medium parameters used: f = 2300 MHz; $\sigma$ = 1.64 mho/m; $\varepsilon_r$ = 38.9; $\rho$ = 1000 kg/m$^3$

DASY4 Configuration:
- Probe: ES3DV3 - SN3090; ConvF(4.83, 4.83, 4.83); Calibrated: 2020/5/9
- Sensor-Surface: 3mm (Mechanical Surface Detection)
- Electronics: DAE4 Sn662; Calibrated: 2020/5/6
- Phantom: SAM 2; Type: QD 000 P40 CB; Serial: TP-1376
- ; Postprocessing SW: SEMCAD, V1.8 Build 186

**system check/Area Scan (51x71x1):** Measurement grid: dx=15mm, dy=15mm
Maximum value of SAR (interpolated) = 0.529 mW/g

**system check/Zoom Scan (5x5x7)/Cube 0:** Measurement grid: dx=8mm, dy=8mm, dz=5mm
Reference Value = 12.8 V/m; Power Drift = 0.048 dB
Peak SAR (extrapolated) = 0.788 W/kg
**SAR(1 g) = 0.473 mW/g; SAR(10 g) = 0.3120 mW/g**
Maximum value of SAR (measured) = 0.537 mW/g

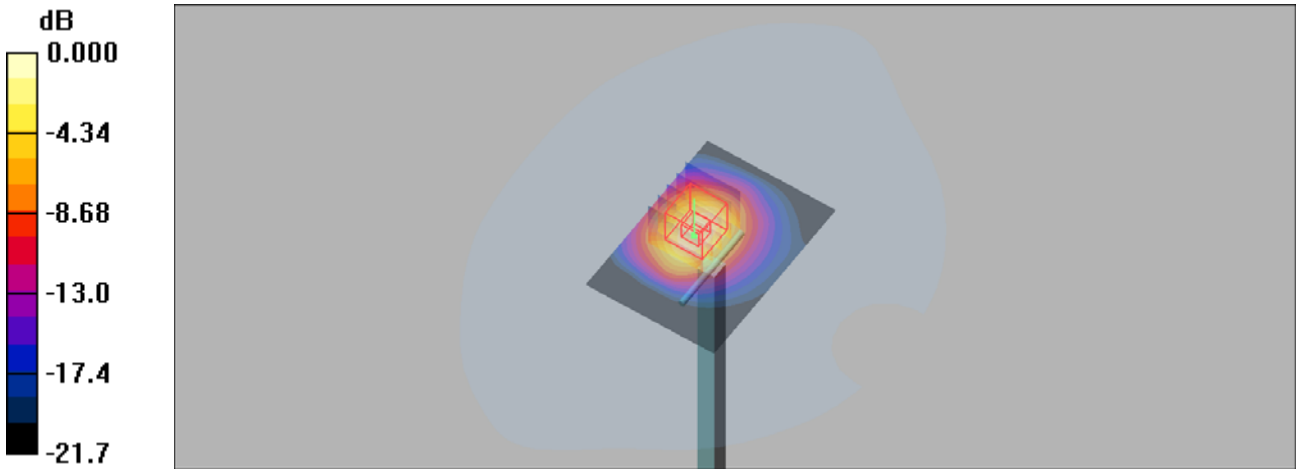


0 dB = 0.537mW/g

Test Laboratory: UnionTrust Date: 2020/6/3

## System Check_H2450

### DUT: Dipole 2450 MHz

Communication System: CW; Frequency: 2450 MHz;Duty Cycle: 1:1
Medium: H2450 Medium parameters used: f = 2450 MHz; $\sigma$ = 1.78 mho/m; $\varepsilon_r$ = 40.2; $\rho$ = 1000 kg/m$^3$

DASY4 Configuration:
- Probe: ES3DV3 - SN3090; ConvF(4.61, 4.61, 4.61); Calibrated: 2020/5/9
- Sensor-Surface: 3mm (Mechanical Surface Detection)
- Electronics: DAE4 Sn662; Calibrated: 2020/5/6
- Phantom: SAM 1; Type: QD 000 P40 CB; Serial: TP/1378
- ; Postprocessing SW: SEMCAD, V1.8 Build 186

**system check/Area Scan (51x71x1):** Measurement grid: dx=15mm, dy=15mm
Maximum value of SAR (interpolated) = 0.481 mW/g

**system check/Zoom Scan (5x5x7)/Cube 0:** Measurement grid: dx=8mm, dy=8mm, dz=5mm
Reference Value = 8.77 V/m; Power Drift = 0.480 dB
Peak SAR (extrapolated) = 0.692 W/kg
**SAR(1 g) = 0.561 mW/g; SAR(10 g) = 0.375 mW/g**
Maximum value of SAR (measured) = 0.669 mW/g

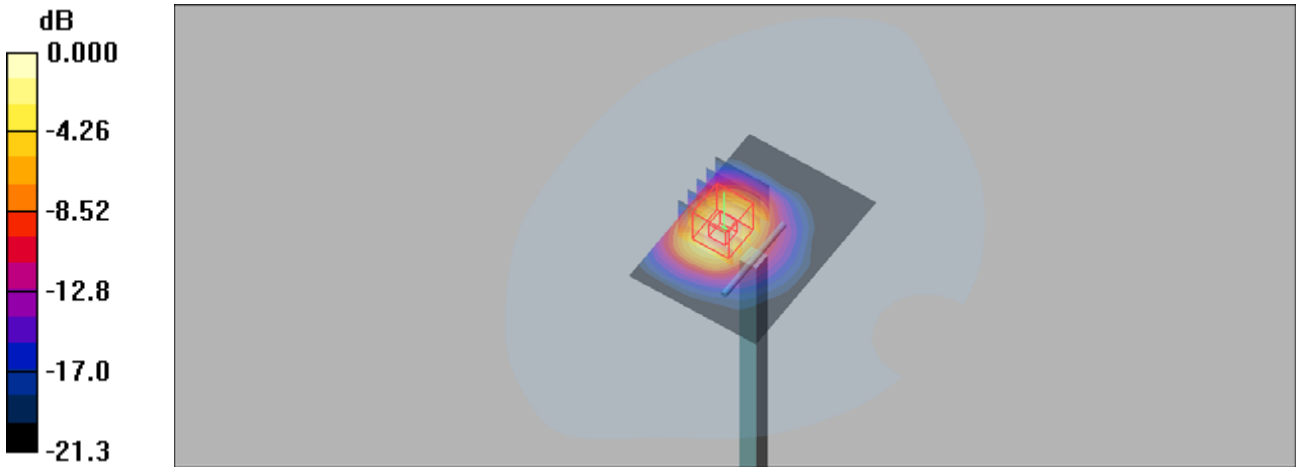


0 dB = 0.669mW/g

Test Laboratory: UnionTrust Date: 2020/5/25

## System Check_H2600

### DUT: Dipole 2600 MHz

Communication System: CW; Frequency: 2600 MHz;Duty Cycle: 1:1
Medium: H2600 Medium parameters used: f = 2600 MHz; $\sigma$ = 2.05 mho/m; $\varepsilon_r$ = 38.3; $\rho$ = 1000 kg/m$^3$

DASY4 Configuration:
- Probe: ES3DV3 - SN3090; ConvF(4.51, 4.51, 4.51); Calibrated: 2020/5/9
- Sensor-Surface: 3mm (Mechanical Surface Detection)
- Electronics: DAE4 Sn662; Calibrated: 2020/5/6
- Phantom: SAM 1; Type: QD 000 P40 CB; Serial: TP/1378
- ; Postprocessing SW: SEMCAD, V1.8 Build 186

**system check/Area Scan (51x71x1):** Measurement grid: dx=15mm, dy=15mm
Maximum value of SAR (interpolated) = 0.620 mW/g

**system check/Zoom Scan (5x5x7)/Cube 0:** Measurement grid: dx=8mm, dy=8mm, dz=5mm
Reference Value = 6.21 V/m; Power Drift = 0.884 dB
Peak SAR (extrapolated) = 0.989 W/kg
**SAR(1 g) = 0.553 mW/g; SAR(10 g) = 0.304 mW/g**
Maximum value of SAR (measured) = 0.689 mW/g

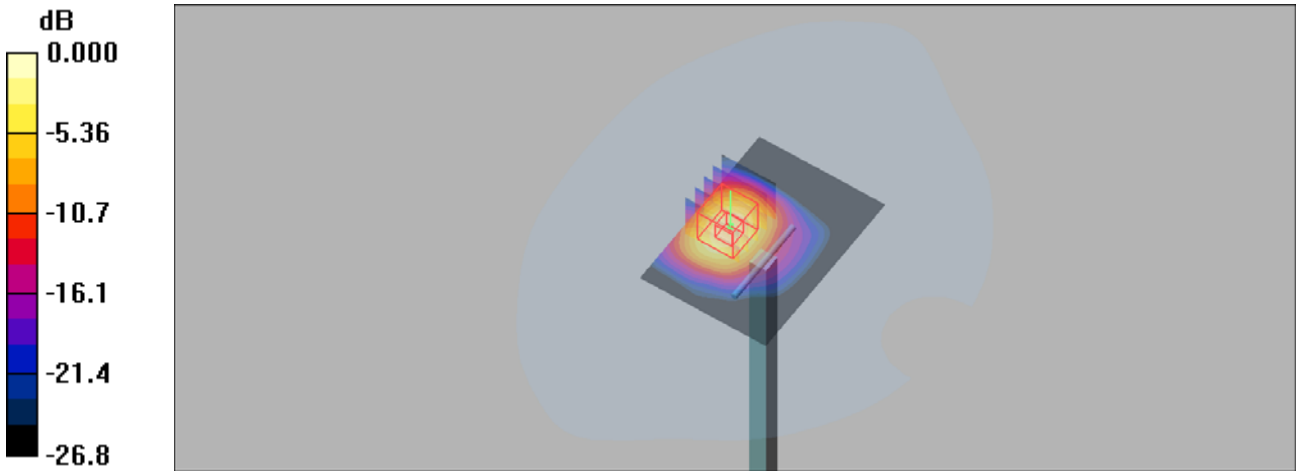


0 dB = 0.689mW/g

Test Laboratory: UnionTrust Date: 2020/5/29

## System Check_H2600

### DUT: Dipole 2600 MHz

Communication System: CW; Frequency: 2600 MHz;Duty Cycle: 1:1
Medium: H2600 Medium parameters used: f = 2600 MHz; $\sigma$ = 2.05 mho/m; $\varepsilon_r$ = 37.7; $\rho$ = 1000 kg/m$^3$

DASY4 Configuration:
- Probe: ES3DV3 - SN3090; ConvF(4.51, 4.51, 4.51); Calibrated: 2020/5/9
- Sensor-Surface: 3mm (Mechanical Surface Detection)
- Electronics: DAE4 Sn662; Calibrated: 2020/5/6
- Phantom: SAM 1; Type: QD 000 P40 CB; Serial: TP/1378
- ; Postprocessing SW: SEMCAD, V1.8 Build 186

**system check/Area Scan (51x71x1):** Measurement grid: dx=15mm, dy=15mm
Maximum value of SAR (interpolated) = 0.618 mW/g

**system check/Zoom Scan (5x5x7)/Cube 0:** Measurement grid: dx=8mm, dy=8mm, dz=5mm
Reference Value = 6.21 V/m; Power Drift = 0.09 dB
Peak SAR (extrapolated) = 0.986 W/kg
**SAR(1 g) = 0.552 mW/g; SAR(10 g) = 0.303 mW/g**
Maximum value of SAR (measured) = 0.687 mW/g

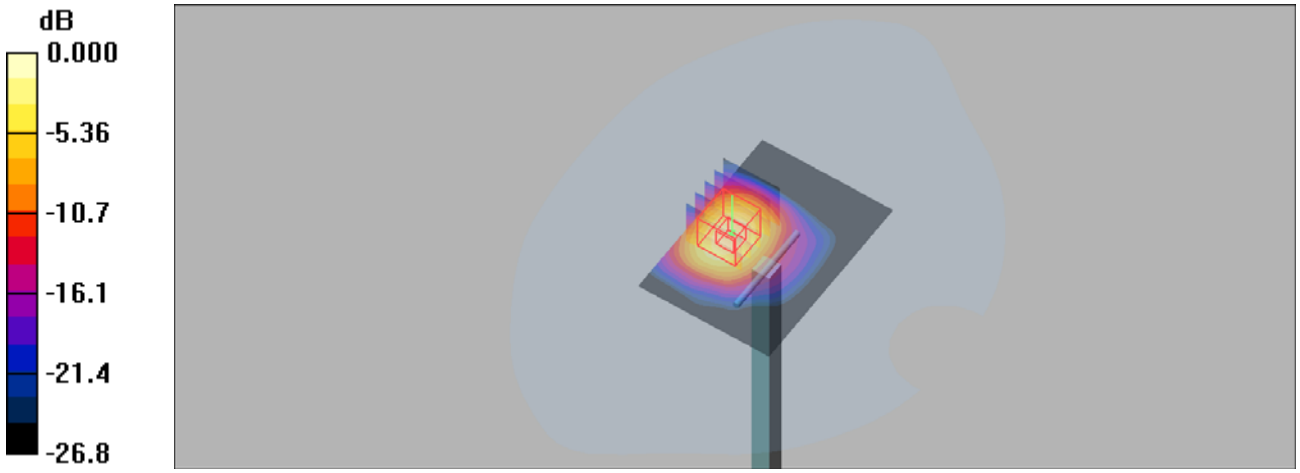


0 dB = 0.687mW/g

Test Laboratory: UnionTrust Date: 6/29/2020

## System Check-D5GHz_H5250

### DUT: Dipole D5GHzV2 SN:1280

Communication System: CW; Frequency: 5250 MHz;Duty Cycle: 1:1
Medium: H5G Medium parameters used: f = 5250 MHz; $\sigma$ = 4.742 S/m; $\varepsilon_r$ = 36.257; $\rho$ = 1000 kg/m$^3$

DASY4 Configuration:
- Probe: EX3DV4 - SN7506; ConvF(5.34, 5.34, 5.34) @ 5250 MHz; Calibrated: 5/29/2020
- Sensor-Surface: 1.4mm (Mechanical Surface Detection)
- Electronics: DAE4 Sn1557; Calibrated: 5/27/2020
- Phantom: SAM 1; Type: QD 000 P40 CB; Serial: TP/1378
- ; Postprocessing SW: SEMCAD, V1.8 Build 186

**Pin=100mW/Area Scan (91x91x1):** Interpolated grid: dx=1.000 mm, dy=1.000 mm
Maximum value of SAR (interpolated) = 18.9 W/kg

**Pin=100mW/Zoom Scan (8x8x7)/Cube 0:** Measurement grid: dx=4mm, dy=4mm, dz=1.4mm
Reference Value = 70.65 V/m; Power Drift = 0.01 dB
Peak SAR (extrapolated) = 32.5 W/kg
**SAR(1 g) = 8.09 W/kg; SAR(10 g) = 2.29 W/kg**
Maximum value of SAR (measured) = 18.6 W/kg

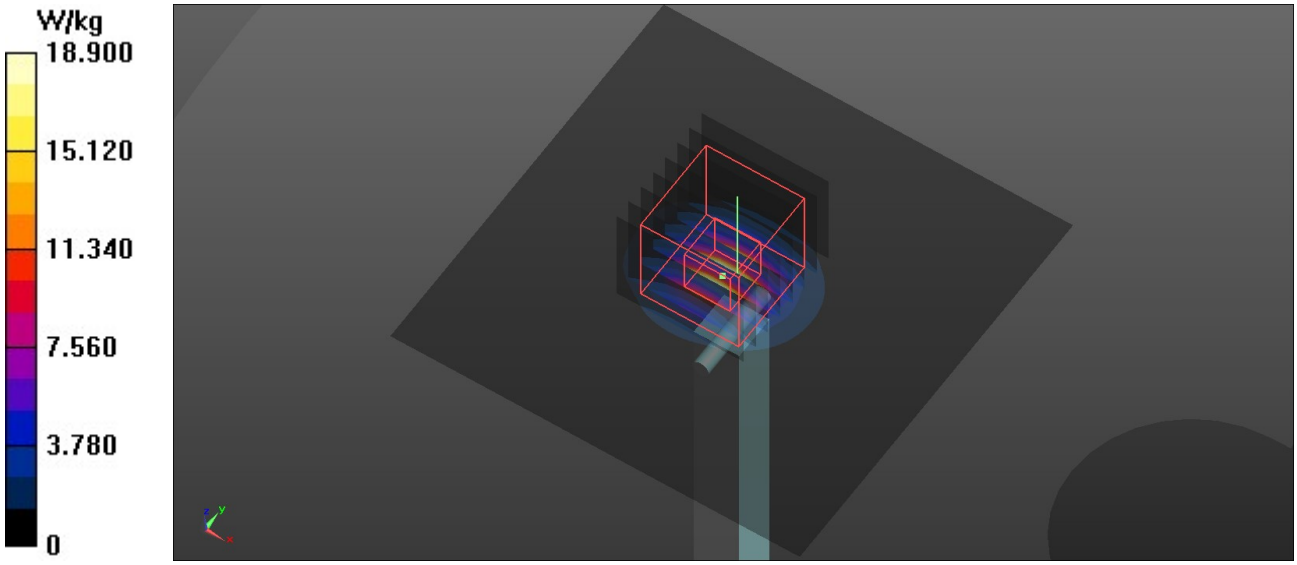

Test Laboratory: UnionTrust Date: 6/29/2020

## System Check-D5GHz_H5600

### DUT: Dipole D5GHzV2 SN:1280

Communication System: CW; Frequency: 5600 MHz;Duty Cycle: 1:1
Medium: H5G Medium parameters used: f = 5600 MHz; $\sigma$ = 5.1 S/m; $\varepsilon_r$ = 35.744; $\rho$ = 1000 kg/m$^3$

DASY4 Configuration:
- Probe: EX3DV4 - SN7506; ConvF(4.88, 4.88, 4.88) @ 5600 MHz; Calibrated: 5/29/2020
- Sensor-Surface: 1.4mm (Mechanical Surface Detection)
- Electronics: DAE4 Sn1557; Calibrated: 5/27/2020
- Phantom: SAM 1; Type: QD 000 P40 CB; Serial: TP/1378
- ; Postprocessing SW: SEMCAD, V1.8 Build 186

**Pin=100mW/Area Scan (91x91x1):** Interpolated grid: dx=1.000 mm, dy=1.000 mm
Maximum value of SAR (interpolated) = 19.5 W/kg

**Pin=100mW/Zoom Scan (8x8x7)/Cube 0:** Measurement grid: dx=4mm, dy=4mm, dz=1.4mm
Reference Value = 68.57 V/m; Power Drift = 0.02 dB
Peak SAR (extrapolated) = 35.5 W/kg
**SAR(1 g) = 8.03 W/kg; SAR(10 g) = 2.24 W/kg**
Maximum value of SAR (measured) = 19.3 W/kg

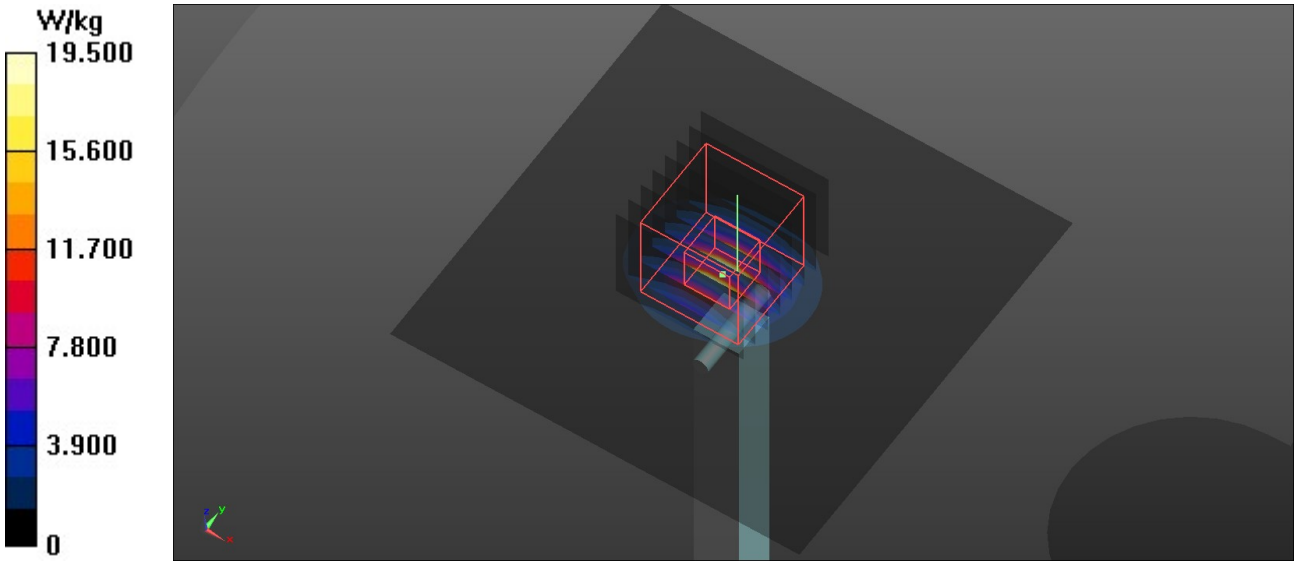

Test Laboratory: UnionTrust Date: 6/30/2020

## System Check-D5GHz_H5800

### DUT: Dipole D5GHzV2 SN:1280

Communication System: CW; Frequency: 5800 MHz;Duty Cycle: 1:1
Medium: H5G Medium parameters used: f = 5800 MHz; $\sigma$ = 5.314 S/m; $\varepsilon_r$ = 35.454; $\rho$ = 1000 kg/m$^3$

DASY4 Configuration:
- Probe: EX3DV4 - SN7506; ConvF(4.94, 4.94, 4.94) @ 5800 MHz; Calibrated: 5/29/2020
- Sensor-Surface: 1.4mm (Mechanical Surface Detection)
- Electronics: DAE4 Sn1557; Calibrated: 5/27/2020
- Phantom: SAM 1; Type: QD 000 P40 CB; Serial: TP/1378
- ; Postprocessing SW: SEMCAD, V1.8 Build 186

**Pin=100mW/Area Scan (91x91x1):** Interpolated grid: dx=1.000 mm, dy=1.000 mm
Maximum value of SAR (interpolated) = 20.4 W/kg
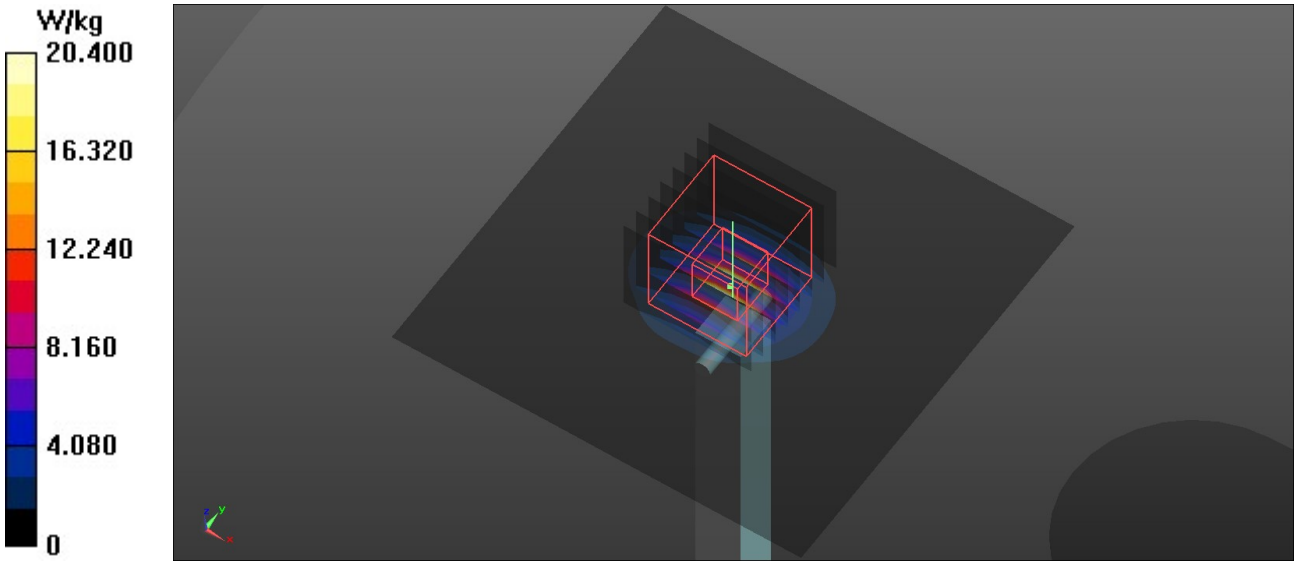
**Pin=100mW/Zoom Scan (8x8x7)/Cube 0:** Measurement grid: dx=4mm, dy=4mm, dz=1.4mm
Reference Value = 70.93 V/m; Power Drift = -0.08 dB
Peak SAR (extrapolated) = 39.3 W/kg
**SAR(1 g) = 8.35 W/kg; SAR(10 g) = 2.33 W/kg**
Maximum value of SAR (measured) = 20.6 W/kg