Test Laboratory: UnionTrust Date: 2020/6/15

System Check_H750

DUT: Dipole 750 MHz

Communication System: CW; Frequency: 750 MHz;Duty Cycle: 1:1
Medium: H750 Medium parameters used: f = 750 MHz; σ = 0.894 mho/m; ε_r = 40.2; ρ = 1000 kg/m^3

DASY4 Configuration:
- Probe: ES3DV3 - SN3090; ConvF(6.24, 6.24, 6.24); Calibrated: 2020/5/9
- Sensor-Surface: 3mm (Mechanical Surface Detection)
- Electronics: DAE4 Sn662; Calibrated: 2020/5/6
- Phantom: SAM 1; Type: QD 000 P40 CB; Serial: TP/1378
- ; Postprocessing SW: SEMCAD, V1.8 Build 186

system check/Area Scan (51x81x1): Measurement grid: dx=15mm, dy=15mm
Maximum value of SAR (interpolated) = 0.077 mW/g

system check/Zoom Scan (5x5x7)/Cube 0: Measurement grid: dx=8mm, dy=8mm, dz=5mm
Reference Value = 8.41 V/m; Power Drift = 0.099 dB
Peak SAR (extrapolated) = 0.100 W/kg
SAR(1 g) = 0.078 mW/g; SAR(10 g) = 0.056 mW/g
Maximum value of SAR (measured) = 0.088 mW/g

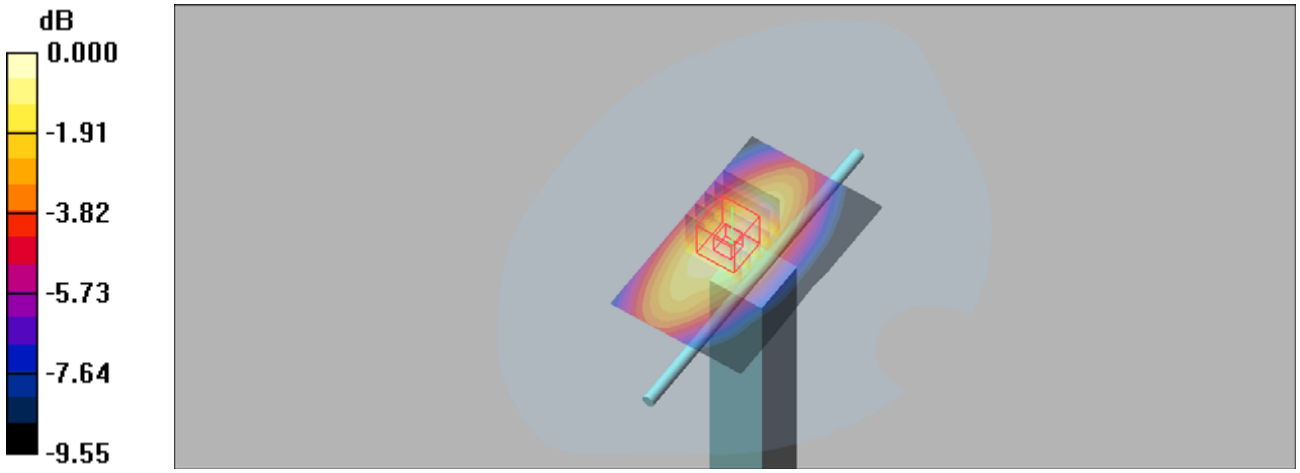

0 dB = 0.088mW/g

Test Laboratory: UnionTrust Date: 2020/6/17

System Check_H750

DUT: Dipole 750 MHz

Communication System: CW; Frequency: 750 MHz;Duty Cycle: 1:1
Medium: H750 Medium parameters used: f = 750 MHz; σ = 0.885 mho/m; ε_r = 40.1; ρ = 1000 kg/m^3

DASY4 Configuration:
- Probe: ES3DV3 - SN3090; ConvF(6.24, 6.24, 6.24); Calibrated: 2020/5/9
- Sensor-Surface: 3mm (Mechanical Surface Detection)
- Electronics: DAE4 Sn662; Calibrated: 2020/5/6
- Phantom: SAM 1; Type: QD 000 P40 CB; Serial: TP/1378
- ; Postprocessing SW: SEMCAD, V1.8 Build 186

system check/Area Scan (51x81x1): Measurement grid: dx=15mm, dy=15mm
Maximum value of SAR (interpolated) = 0.077 mW/g

system check/Zoom Scan (5x5x7)/Cube 0: Measurement grid: dx=8mm, dy=8mm, dz=5mm
Reference Value = 8.41 V/m; Power Drift = 0.099 dB
Peak SAR (extrapolated) = 0.099 W/kg
SAR(1 g) = 0.077 mW/g; SAR(10 g) = 0.056 mW/g
Maximum value of SAR (measured) = 0.086 mW/g

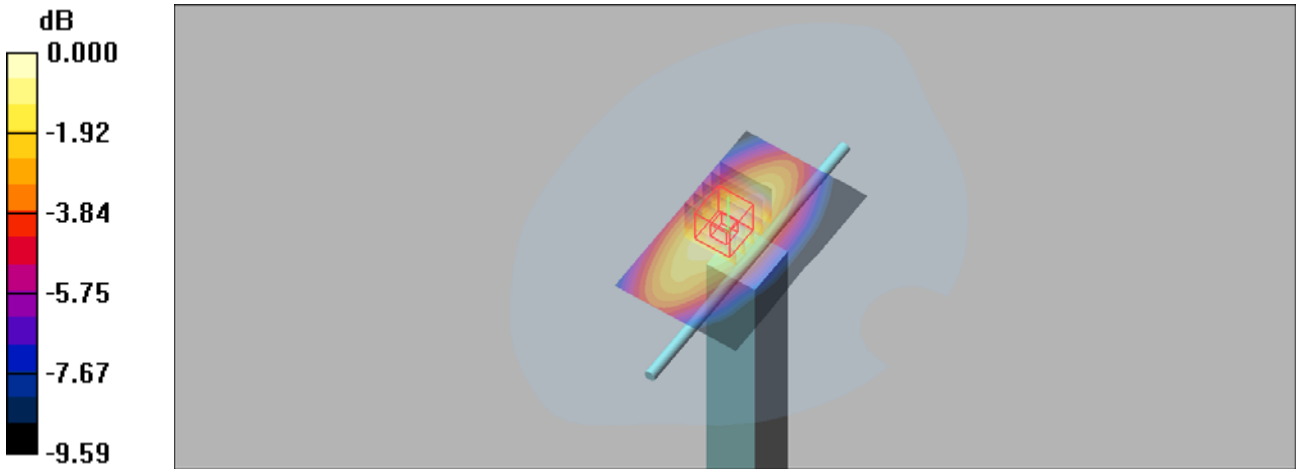

0 dB = 0.086mW/g

Test Laboratory: UnionTrust Date: 2020/6/8

System Check_H835

DUT: Dipole 835 MHz

Communication System: CW; Frequency: 835 MHz;Duty Cycle: 1:1
Medium: H835 Medium parameters used: f = 835 MHz; σ = 0.892 mho/m; ε_r = 42.5; ρ = 1000 kg/m^3

DASY4 Configuration:
- Probe: ES3DV3 - SN3090; ConvF(6.13, 6.13, 6.13); Calibrated: 2020/5/9
- Sensor-Surface: 3mm (Mechanical Surface Detection)
- Electronics: DAE4 Sn662; Calibrated: 2020/5/6
- Phantom: SAM 1; Type: QD 000 P40 CB; Serial: TP/1378
- ; Postprocessing SW: SEMCAD, V1.8 Build 186

system check/Area Scan (51x101x1): Measurement grid: dx=15mm, dy=15mm
Maximum value of SAR (interpolated) = 0.117 mW/g

system check/Zoom Scan (5x5x7)/Cube 0: Measurement grid: dx=8mm, dy=8mm, dz=5mm
Reference Value = 10.1 V/m; Power Drift = -0.011 dB
Peak SAR (extrapolated) = 0.148 W/kg
SAR(1 g) = 0.103 mW/g; SAR(10 g) = 0.069 mW/g
Maximum value of SAR (measured) = 0.120 mW/g

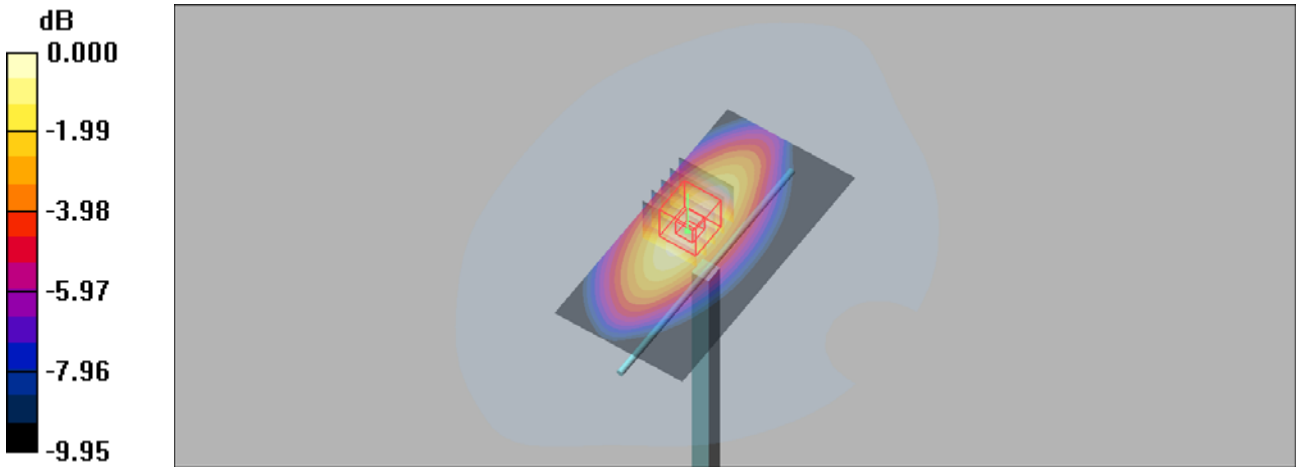

0 dB = 0.120mW/g

Test Laboratory: UnionTrust Date: 2020/6/16

System Check_H835

DUT: Dipole 835 MHz

Communication System: CW; Frequency: 835 MHz;Duty Cycle: 1:1
Medium: H835 Medium parameters used: f = 835 MHz; σ = 0.878 mho/m; ε_r = 41.5; ρ = 1000 kg/m^3

DASY4 Configuration:
- Probe: ES3DV3 - SN3090; ConvF(6.13, 6.13, 6.13); Calibrated: 2020/5/9
- Sensor-Surface: 3mm (Mechanical Surface Detection)
- Electronics: DAE4 Sn662; Calibrated: 2020/5/6
- Phantom: SAM 1; Type: QD 000 P40 CB; Serial: TP/1378
- ; Postprocessing SW: SEMCAD, V1.8 Build 186

system check/Area Scan (51x101x1): Measurement grid: dx=15mm, dy=15mm
Maximum value of SAR (interpolated) = 0.116 mW/g

system check/Zoom Scan (5x5x7)/Cube 0: Measurement grid: dx=8mm, dy=8mm, dz=5mm
Reference Value = 10.1 V/m; Power Drift = -0.011 dB
Peak SAR (extrapolated) = 0.146 W/kg
SAR(1 g) = 0.102 mW/g; SAR(10 g) = 0.068 mW/g
Maximum value of SAR (measured) = 0.118 mW/g

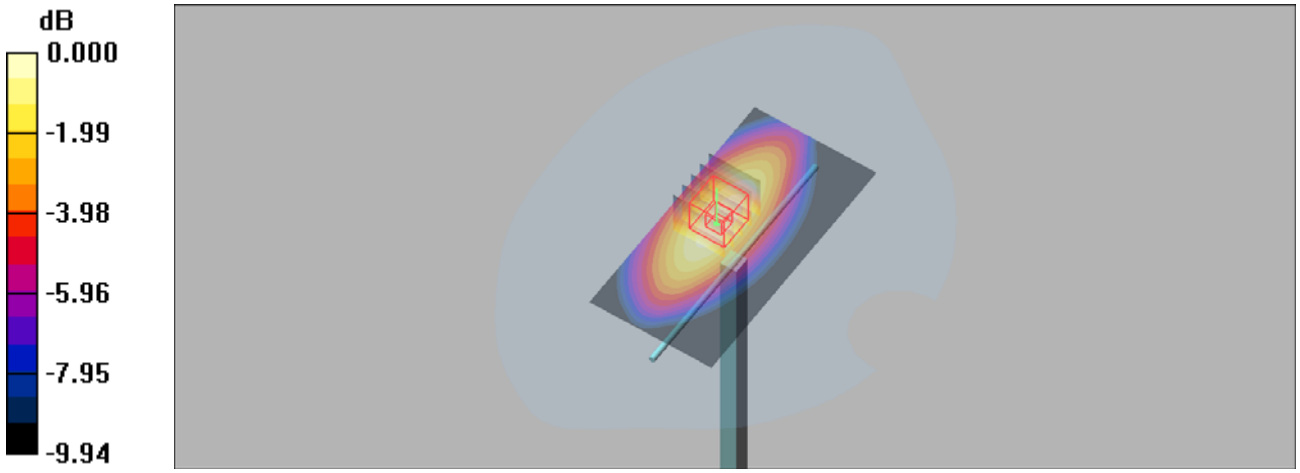

0 dB = 0.118mW/g

Test Laboratory: UnionTrust Date: 2020/6/28

System Check_H835

DUT: Dipole 835 MHz

Communication System: CW; Frequency: 835 MHz;Duty Cycle: 1:1
Medium: H835 Medium parameters used: f = 835 MHz; σ = 0.888 mho/m; ε_r = 41.3; ρ = 1000 kg/m^3

DASY4 Configuration:
- Probe: ES3DV3 - SN3090; ConvF(6.13, 6.13, 6.13); Calibrated: 2020/5/9
- Sensor-Surface: 3mm (Mechanical Surface Detection)
- Electronics: DAE4 Sn662; Calibrated: 2020/5/6
- Phantom: SAM 1; Type: QD 000 P40 CB; Serial: TP/1378
- ; Postprocessing SW: SEMCAD, V1.8 Build 186

system check/Area Scan (51x101x1): Measurement grid: dx=15mm, dy=15mm
Maximum value of SAR (interpolated) = 0.117 mW/g

system check/Zoom Scan (5x5x7)/Cube 0: Measurement grid: dx=8mm, dy=8mm, dz=5mm
Reference Value = 10.1 V/m; Power Drift = -0.011 dB
Peak SAR (extrapolated) = 0.147 W/kg
SAR(1 g) = 0.103 mW/g; SAR(10 g) = 0.068 mW/g
Maximum value of SAR (measured) = 0.120 mW/g

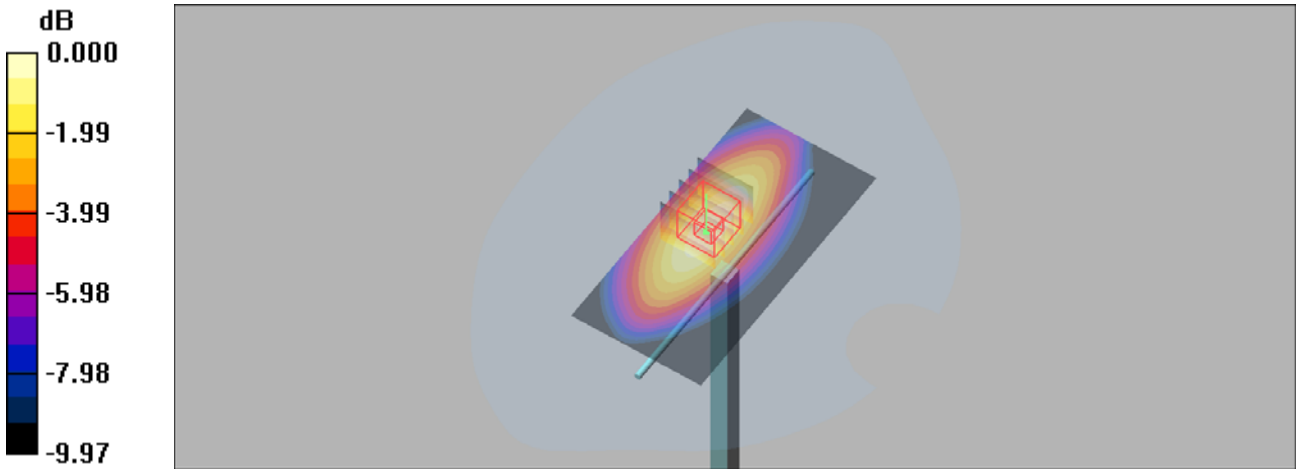

0 dB = 0.120mW/g

Test Laboratory: UnionTrust Date: 2020/6/6

System Check_H1750

DUT: Dipole 1750 MHz

Communication System: CW; Frequency: 1750 MHz;Duty Cycle: 1:1
Medium: H1750 Medium parameters used: f = 1750 MHz; σ = 1.41 mho/m; ε_r = 41; ρ = 1000 kg/m^3

DASY4 Configuration:
- Probe: ES3DV3 - SN3090; ConvF(5.38, 5.38, 5.38); Calibrated: 2020/5/9
- Sensor-Surface: 3mm (Mechanical Surface Detection)
- Electronics: DAE4 Sn662; Calibrated: 2020/5/6
- Phantom: SAM 2; Type: QD 000 P40 CB; Serial: TP-1376
- ; Postprocessing SW: SEMCAD, V1.8 Build 186

system check/Area Scan (51x71x1): Measurement grid: dx=15mm, dy=15mm
Maximum value of SAR (interpolated) = 0.487 mW/g

system check/Zoom Scan (5x5x7)/Cube 0: Measurement grid: dx=8mm, dy=8mm, dz=5mm
Reference Value = 11.3 V/m; Power Drift = 0.302 dB
Peak SAR (extrapolated) = 0.769 W/kg
SAR(1 g) = 0.389 mW/g; SAR(10 g) = 0.196 mW/g
Maximum value of SAR (measured) = 0.504 mW/g

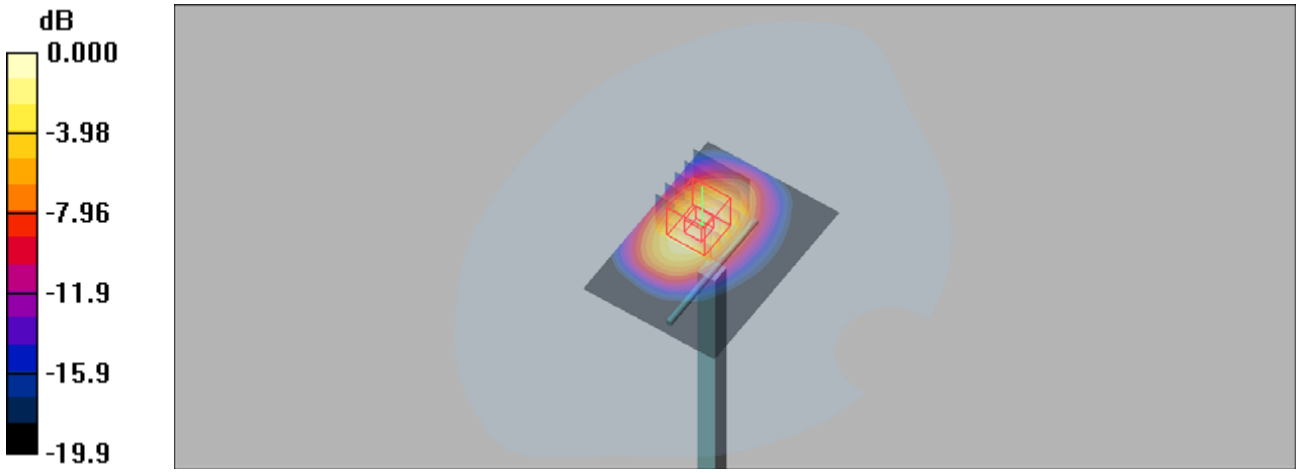

0 dB = 0.504mW/g

Test Laboratory: UnionTrust Date: 2020/6/15

System Check_H1750

DUT: Dipole 1750 MHz

Communication System: CW; Frequency: 1750 MHz;Duty Cycle: 1:1
Medium: H1750 Medium parameters used: f = 1750 MHz; σ = 1.36 mho/m; ε_r = 40.4; ρ = 1000 kg/m^3

DASY4 Configuration:
- Probe: ES3DV3 - SN3090; ConvF(5.38, 5.38, 5.38); Calibrated: 2020/5/9
- Sensor-Surface: 3mm (Mechanical Surface Detection)
- Electronics: DAE4 Sn662; Calibrated: 2020/5/6
- Phantom: SAM 2; Type: QD 000 P40 CB; Serial: TP-1376
- ; Postprocessing SW: SEMCAD, V1.8 Build 186

system check/Area Scan (51x71x1): Measurement grid: dx=15mm, dy=15mm
Maximum value of SAR (interpolated) = 0.470 mW/g

system check/Zoom Scan (5x5x7)/Cube 0: Measurement grid: dx=8mm, dy=8mm, dz=5mm
Reference Value = 11.3 V/m; Power Drift = 0.02 dB
Peak SAR (extrapolated) = 0.742 W/kg
SAR(1 g) = 0.375 mW/g; SAR(10 g) = 0.189 mW/g
Maximum value of SAR (measured) = 0.487 mW/g

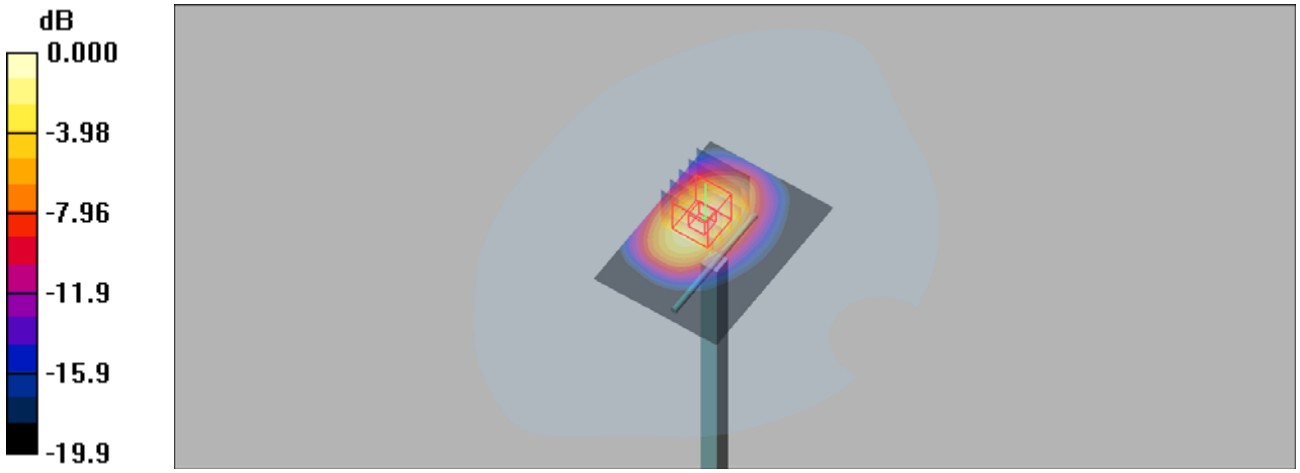

0 dB = 0.487mW/g

Test Laboratory: UnionTrust Date: 2020/6/19

System Check_H1750

DUT: Dipole 1750 MHz

Communication System: CW; Frequency: 1750 MHz;Duty Cycle: 1:1
Medium: H1750 Medium parameters used: f = 1750 MHz; σ = 1.38 mho/m; ε_r = 39.3; ρ = 1000 kg/m^3

DASY4 Configuration:
- Probe: ES3DV3 - SN3090; ConvF(5.38, 5.38, 5.38); Calibrated: 2020/5/9
- Sensor-Surface: 3mm (Mechanical Surface Detection)
- Electronics: DAE4 Sn662; Calibrated: 2020/5/6
- Phantom: SAM 1; Type: QD 000 P40 CB; Serial: TP/1378
- ; Postprocessing SW: SEMCAD, V1.8 Build 186

system check/Area Scan (51x71x1): Measurement grid: dx=15mm, dy=15mm
Maximum value of SAR (interpolated) = 0.476 mW/g

system check/Zoom Scan (5x5x7)/Cube 0: Measurement grid: dx=8mm, dy=8mm, dz=5mm
Reference Value = 11.3 V/m; Power Drift = 0.302 dB
Peak SAR (extrapolated) = 0.752 W/kg
SAR(1 g) = 0.380 mW/g; SAR(10 g) = 0.191 mW/g
Maximum value of SAR (measured) = 0.493 mW/g

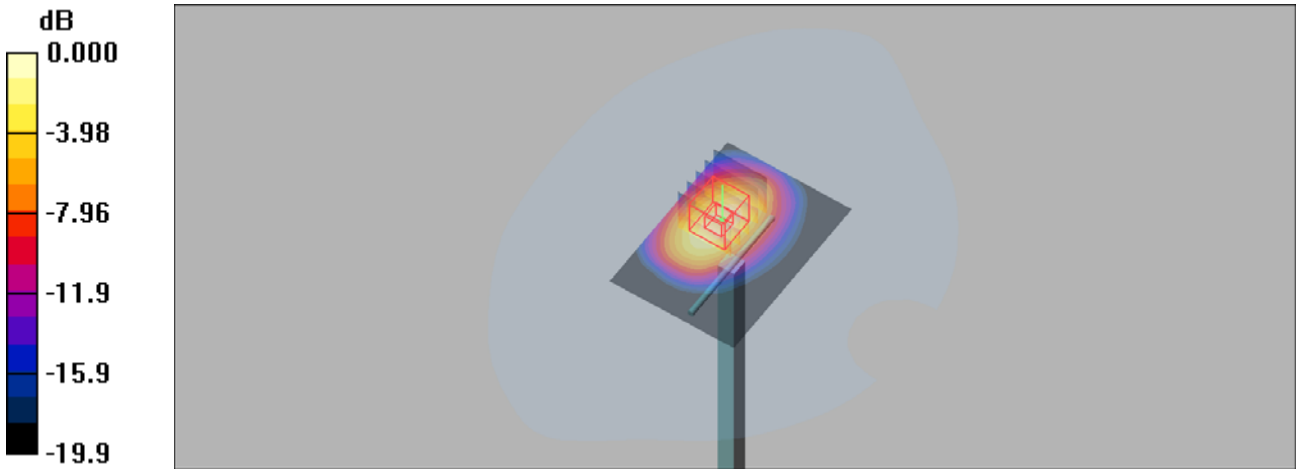

0 dB = 0.493mW/g

Test Laboratory: UnionTrust Date: 2020/6/6

System Check_H1900

DUT: Dipole 1900 MHz

Communication System: CW; Frequency: 1900 MHz;Duty Cycle: 1:1
Medium: H1900 Medium parameters used: f = 1900 MHz; σ = 1.45 mho/m; ε_r = 41.4; ρ = 1000 kg/m^3

DASY4 Configuration:
- Probe: ES3DV3 - SN3090; ConvF(5.1, 5.1, 5.1); Calibrated: 2020/5/9
- Sensor-Surface: 3mm (Mechanical Surface Detection)
- Electronics: DAE4 Sn662; Calibrated: 2020/5/6
- Phantom: SAM 2; Type: QD 000 P40 CB; Serial: TP-1376
- ; Postprocessing SW: SEMCAD, V1.8 Build 186

system check/Area Scan (51x71x1): Measurement grid: dx=15mm, dy=15mm
Maximum value of SAR (interpolated) = 0.558 mW/g

system check/Zoom Scan (5x5x7)/Cube 0: Measurement grid: dx=8mm, dy=8mm, dz=5mm
Reference Value = 12.7 V/m; Power Drift = 0.03 dB
Peak SAR (extrapolated) = 0.891 W/kg
SAR(1 g) = 0.426 mW/g; SAR(10 g) = 0.213 mW/g
Maximum value of SAR (measured) = 0.570 mW/g

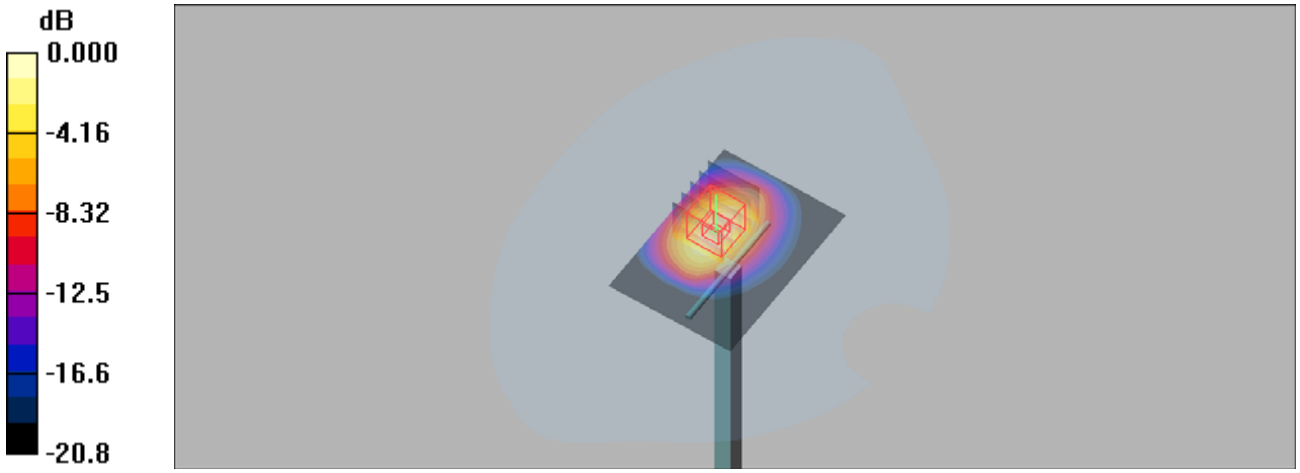

0 dB = 0.570mW/g

Test Laboratory: UnionTrust Date: 2020/6/9

System Check_H1900

DUT: Dipole 1900 MHz

Communication System: CW; Frequency: 1900 MHz;Duty Cycle: 1:1
Medium: H1900 Medium parameters used: f = 1900 MHz; σ = 1.41 mho/m; ε_r = 41.3; ρ = 1000 kg/m^3

DASY4 Configuration:
- Probe: ES3DV3 - SN3090; ConvF(5.1, 5.1, 5.1); Calibrated: 2020/5/9
- Sensor-Surface: 3mm (Mechanical Surface Detection)
- Electronics: DAE4 Sn662; Calibrated: 2020/5/6
- Phantom: SAM 2; Type: QD 000 P40 CB; Serial: TP-1376
- ; Postprocessing SW: SEMCAD, V1.8 Build 186

system check/Area Scan (51x71x1): Measurement grid: dx=15mm, dy=15mm
Maximum value of SAR (interpolated) = 0.542 mW/g

system check/Zoom Scan (5x5x7)/Cube 0: Measurement grid: dx=8mm, dy=8mm, dz=5mm
Reference Value = 12.7 V/m; Power Drift = 0.03 dB
Peak SAR (extrapolated) = 0.866 W/kg
SAR(1 g) = 0.424 mW/g; SAR(10 g) = 0.207 mW/g
Maximum value of SAR (measured) = 0.554 mW/g

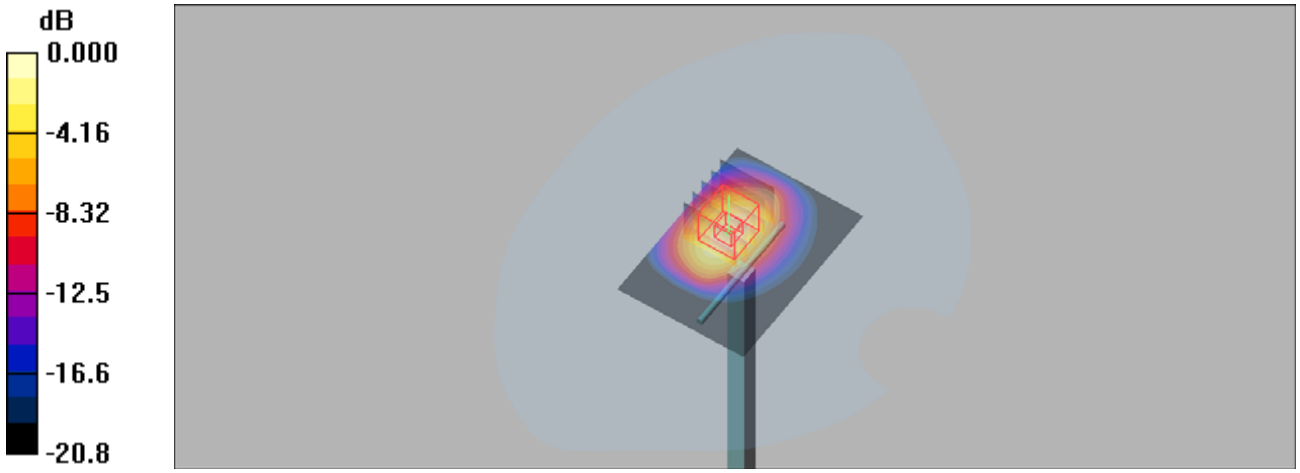

0 dB = 0.554mW/g

Test Laboratory: UnionTrust Date: 2020/6/15

System Check_H1900

DUT: Dipole 1900 MHz

Communication System: CW; Frequency: 1900 MHz;Duty Cycle: 1:1
Medium: H1900 Medium parameters used: f = 1900 MHz; σ = 1.47 mho/m; ε_r = 41.6; ρ = 1000 kg/m^3

DASY4 Configuration:
- Probe: ES3DV3 - SN3090; ConvF(5.1, 5.1, 5.1); Calibrated: 2020/5/9
- Sensor-Surface: 3mm (Mechanical Surface Detection)
- Electronics: DAE4 Sn662; Calibrated: 2020/5/6
- Phantom: SAM 2; Type: QD 000 P40 CB; Serial: TP-1376
- ; Postprocessing SW: SEMCAD, V1.8 Build 186

system check/Area Scan (51x71x1): Measurement grid: dx=15mm, dy=15mm
Maximum value of SAR (interpolated) = 0.542 mW/g

system check/Zoom Scan (5x5x7)/Cube 0: Measurement grid: dx=8mm, dy=8mm, dz=5mm
Reference Value = 12.7 V/m; Power Drift = 0.04 dB
Peak SAR (extrapolated) = 0.866 W/kg
SAR(1 g) = 0.426 mW/g; SAR(10 g) = 0.207 mW/g
Maximum value of SAR (measured) = 0.554 mW/g

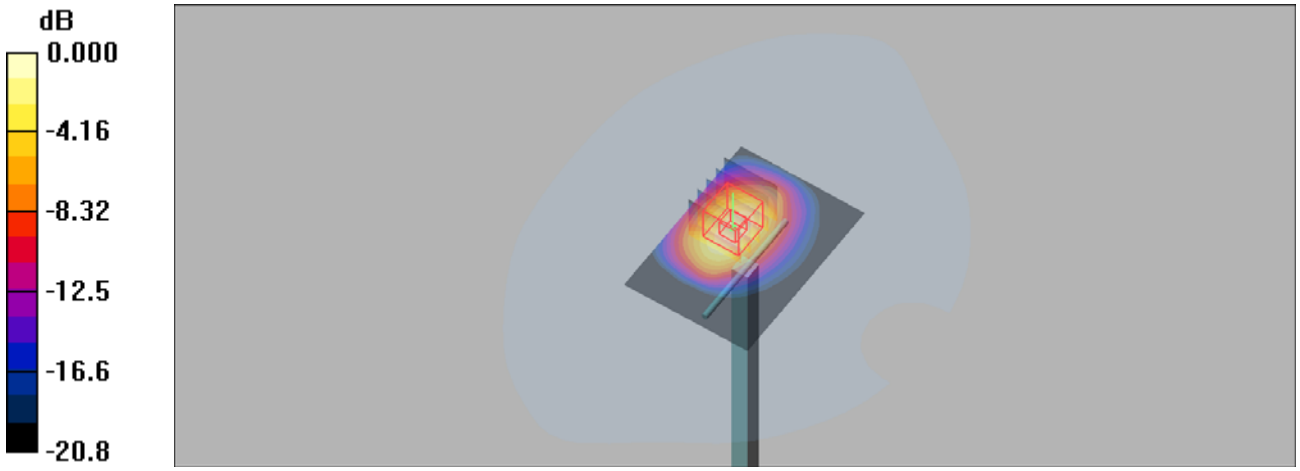

0 dB = 0.554mW/g

Test Laboratory: UnionTrust Date: 2020/6/5

System Check_H2300

DUT: Dipole 2300 MHz

Communication System: CW; Frequency: 2300 MHz;Duty Cycle: 1:1
Medium: H2300 Medium parameters used: f = 2300 MHz; σ = 1.66 mho/m; ε_r = 38.9; ρ = 1000 kg/m^3

DASY4 Configuration:
- Probe: ES3DV3 - SN3090; ConvF(4.83, 4.83, 4.83); Calibrated: 2020/5/9
- Sensor-Surface: 3mm (Mechanical Surface Detection)
- Electronics: DAE4 Sn662; Calibrated: 2020/5/6
- Phantom: SAM 2; Type: QD 000 P40 CB; Serial: TP-1376
- ; Postprocessing SW: SEMCAD, V1.8 Build 186

system check/Area Scan (51x71x1): Measurement grid: dx=15mm, dy=15mm
Maximum value of SAR (interpolated) = 0.535 mW/g

system check/Zoom Scan (5x5x7)/Cube 0: Measurement grid: dx=8mm, dy=8mm, dz=5mm
Reference Value = 12.8 V/m; Power Drift = 0.048 dB
Peak SAR (extrapolated) = 0.798 W/kg
SAR(1 g) = 0.468 mW/g; SAR(10 g) = 0.262 mW/g
Maximum value of SAR (measured) = 0.573 mW/g

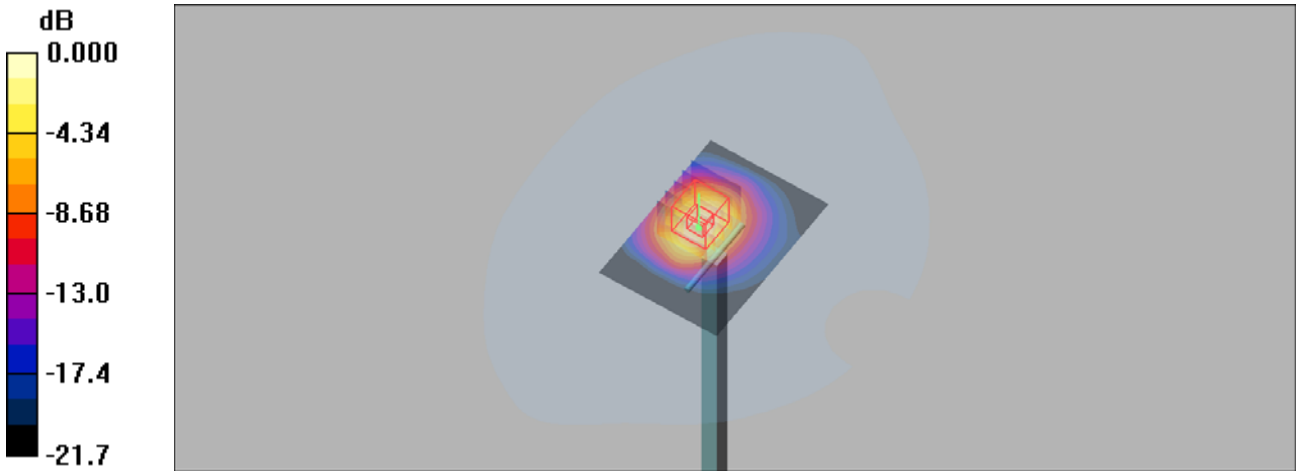

0 dB = 0.573mW/g

Test Laboratory: UnionTrust Date: 2020/6/5

System Check_H2450

DUT: Dipole 2450 MHz

Communication System: CW; Frequency: 2450 MHz;Duty Cycle: 1:1
Medium: H2450 Medium parameters used: f = 2450 MHz; σ = 1.77 mho/m; ε_r = 40.3; ρ = 1000 kg/m^3

DASY4 Configuration:
- Probe: ES3DV3 - SN3090; ConvF(4.61, 4.61, 4.61); Calibrated: 2020/5/9
- Sensor-Surface: 3mm (Mechanical Surface Detection)
- Electronics: DAE4 Sn662; Calibrated: 2020/5/6
- Phantom: SAM 2; Type: QD 000 P40 CB; Serial: TP-1376
- ; Postprocessing SW: SEMCAD, V1.8 Build 186

system check/Area Scan (51x71x1): Measurement grid: dx=15mm, dy=15mm
Maximum value of SAR (interpolated) = 0.479 mW/g

system check/Zoom Scan (5x5x7)/Cube 0: Measurement grid: dx=8mm, dy=8mm, dz=5mm
Reference Value = 8.77 V/m; Power Drift = 0.05 dB
Peak SAR (extrapolated) = 0.688 W/kg
SAR(1 g) = 0.559 mW/g; SAR(10 g) = 0.374 mW/g
Maximum value of SAR (measured) = 0.666 mW/g

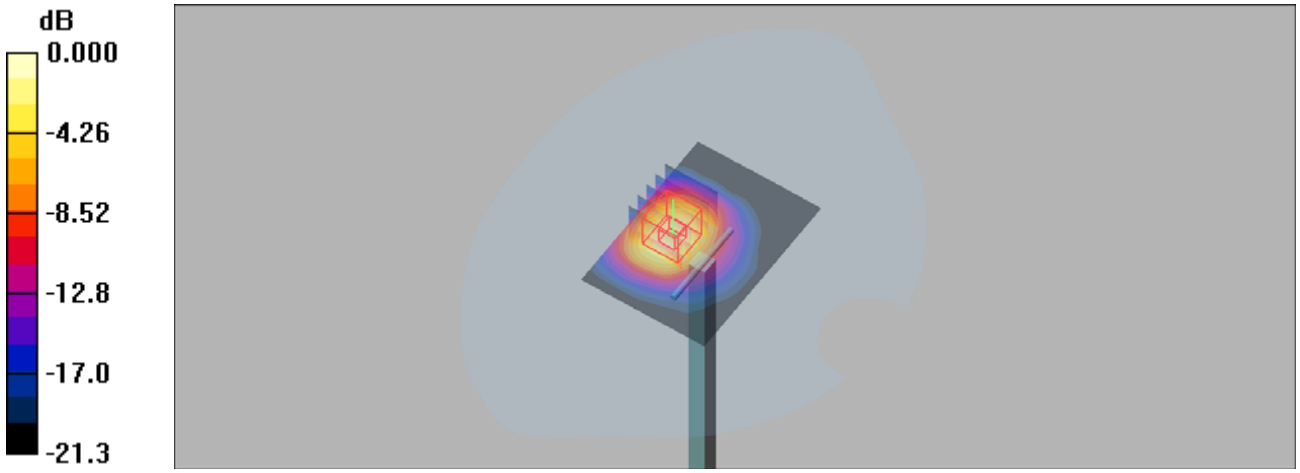

0 dB = 0.666mW/g

Test Laboratory: UnionTrust Date: 2020/6/5

System Check_H2600

DUT: Dipole 2600 MHz

Communication System: CW; Frequency: 2600 MHz;Duty Cycle: 1:1
Medium: H2600 Medium parameters used: f = 2600 MHz; σ = 2.03 mho/m; ε_r = 37.6; ρ = 1000 kg/m^3

DASY4 Configuration:
- Probe: ES3DV3 - SN3090; ConvF(4.51, 4.51, 4.51); Calibrated: 2020/5/9
- Sensor-Surface: 3mm (Mechanical Surface Detection)
- Electronics: DAE4 Sn662; Calibrated: 2020/5/6
- Phantom: SAM 2; Type: QD 000 P40 CB; Serial: TP-1376
- ; Postprocessing SW: SEMCAD, V1.8 Build 186

system check/Area Scan (51x71x1): Measurement grid: dx=15mm, dy=15mm
Maximum value of SAR (interpolated) = 0.621 mW/g

system check/Zoom Scan (5x5x7)/Cube 0: Measurement grid: dx=8mm, dy=8mm, dz=5mm
Reference Value = 6.21 V/m; Power Drift = 0.884 dB
Peak SAR (extrapolated) = 0.989 W/kg
SAR(1 g) = 0.554 mW/g; SAR(10 g) = 0.304 mW/g
Maximum value of SAR (measured) = 0.689 mW/g

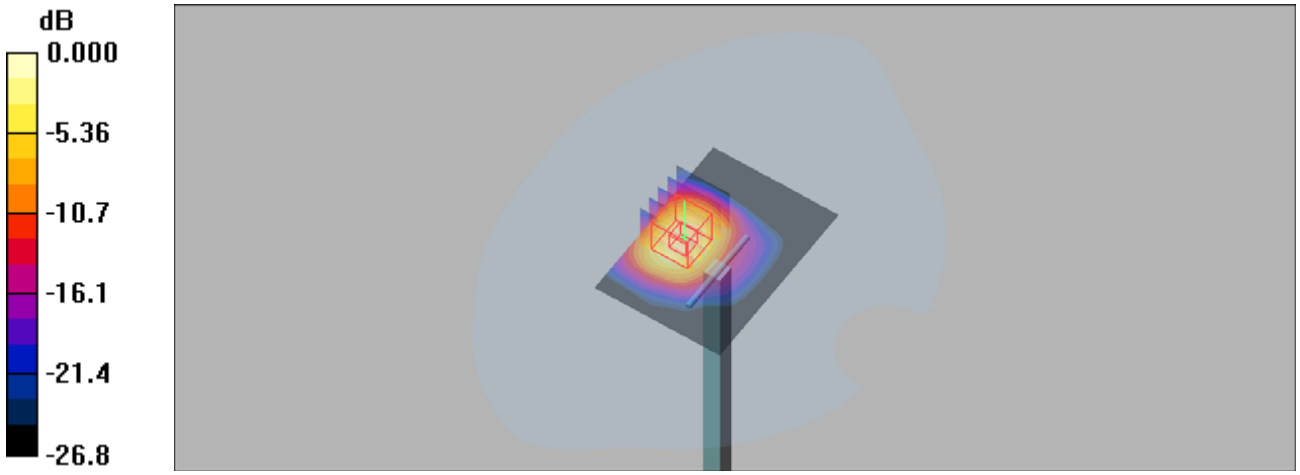

0 dB = 0.689mW/g

Test Laboratory: UnionTrust Date: 2020/6/19

System Check_H2600

DUT: Dipole 2600 MHz

Communication System: CW; Frequency: 2600 MHz;Duty Cycle: 1:1
Medium: H2600 Medium parameters used: f = 2600 MHz; σ = 2.01 mho/m; ε_r = 37.2; ρ = 1000 kg/m^3

DASY4 Configuration:
- Probe: ES3DV3 - SN3090; ConvF(4.51, 4.51, 4.51); Calibrated: 2020/5/9
- Sensor-Surface: 3mm (Mechanical Surface Detection)
- Electronics: DAE4 Sn662; Calibrated: 2020/5/6
- Phantom: SAM 2; Type: QD 000 P40 CB; Serial: TP-1376
- ; Postprocessing SW: SEMCAD, V1.8 Build 186

system check/Area Scan (51x71x1): Measurement grid: dx=15mm, dy=15mm
Maximum value of SAR (interpolated) = 0.621 mW/g

system check/Zoom Scan (5x5x7)/Cube 0: Measurement grid: dx=8mm, dy=8mm, dz=5mm
Reference Value = 6.21 V/m; Power Drift = 0.884 dB
Peak SAR (extrapolated) = 0.989 W/kg
SAR(1 g) = 0.556 mW/g; SAR(10 g) = 0.218 mW/g
Maximum value of SAR (measured) = 0.692 mW/g

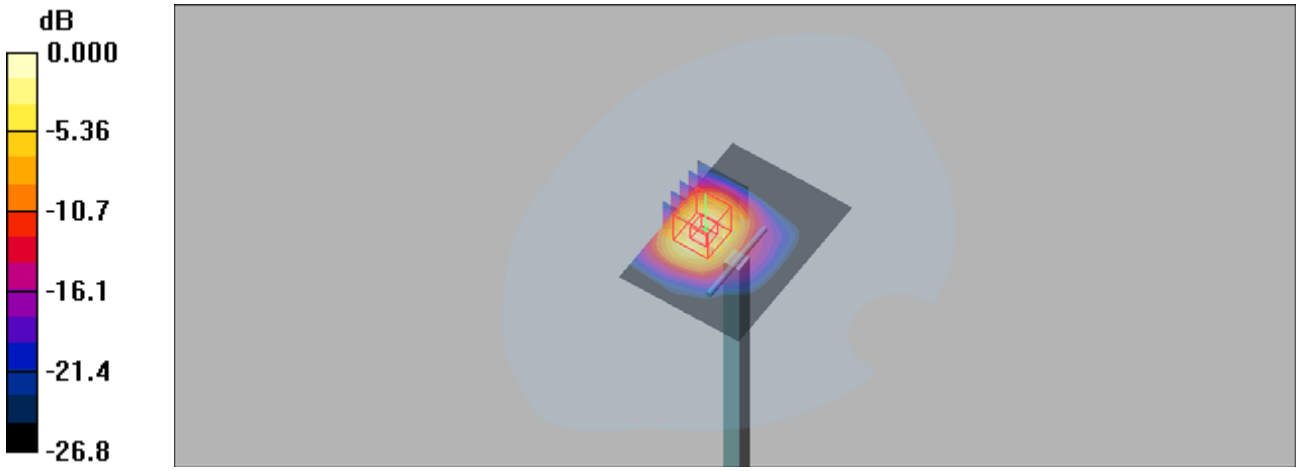

0 dB = 0.692mW/g

Test Laboratory: UnionTrust Date: 2020/7/7

System Check-D5GHz_H5250

DUT: Dipole D5GHzV2 SN:1280

Communication System: CW; Frequency: 5250 MHz;Duty Cycle: 1:1
Medium: H5G Medium parameters used: f = 5250 MHz; σ = 4.694 S/m; ε_r = 35.421; ρ = 1000 kg/m^3

DASY4 Configuration:
- Probe: EX3DV4 - SN7506; ConvF(5.34, 5.34, 5.34) @ 5250 MHz; Calibrated: 5/29/2020
- Sensor-Surface: 1.4mm (Mechanical Surface Detection)
- Electronics: DAE4 Sn1557; Calibrated: 5/27/2020
- Phantom: SAM 1; Type: QD 000 P40 CB; Serial: TP/1378
- ; Postprocessing SW: SEMCAD, V1.8 Build 186

Pin=100mW/Area Scan (91x91x1): Interpolated grid: dx=1.000 mm, dy=1.000 mm
Maximum value of SAR (interpolated) = 18.7 W/kg

Pin=100mW/Zoom Scan (8x8x7)/Cube 0: Measurement grid: dx=4mm, dy=4mm, dz=1.4mm
Reference Value = 70.65 V/m; Power Drift = 0.05 dB
Peak SAR (extrapolated) = 32.2 W/kg
SAR(1 g) = 8.01 W/kg; SAR(10 g) = 2.26 W/kg
Maximum value of SAR (measured) = 18.4 W/kg

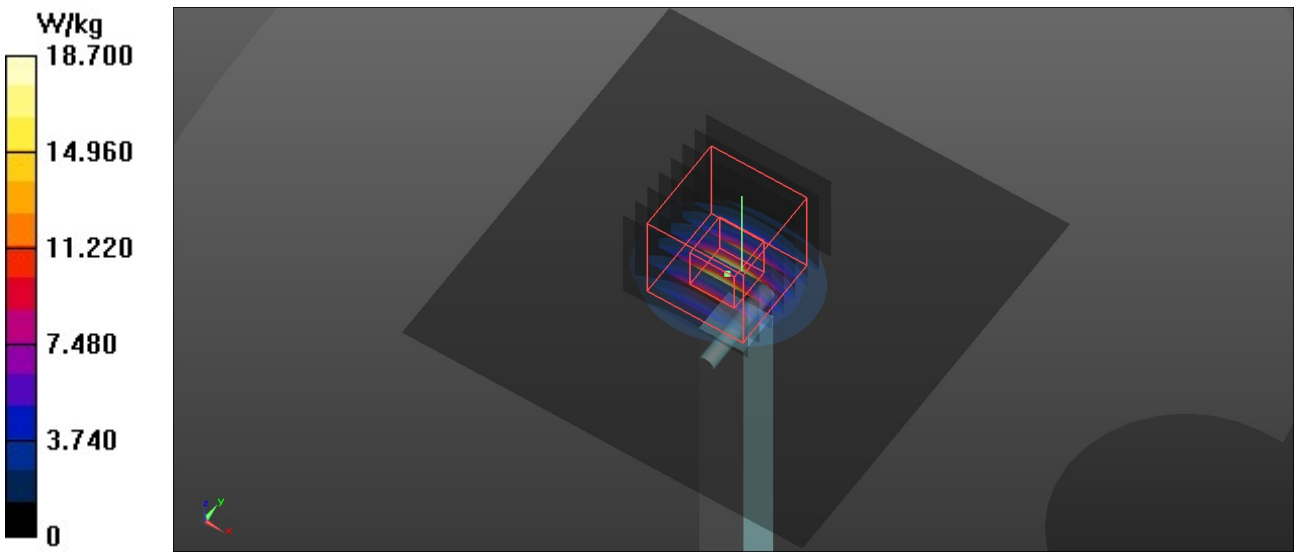

Test Laboratory: UnionTrust Date: 2020/7/6

System Check-D5GHz_H5600

DUT: Dipole D5GHzV2 SN:1280

Communication System: CW; Frequency: 5600 MHz;Duty Cycle: 1:1
Medium: H5G Medium parameters used: f = 5600 MHz; σ = 5.045 S/m; ε_r = 34.912; ρ = 1000 kg/m^3

DASY4 Configuration:
- Probe: EX3DV4 - SN7506; ConvF(4.88, 4.88, 4.88) @ 5600 MHz; Calibrated: 5/29/2020
- Sensor-Surface: 1.4mm (Mechanical Surface Detection)
- Electronics: DAE4 Sn1557; Calibrated: 5/27/2020
- Phantom: SAM 1; Type: QD 000 P40 CB; Serial: TP/1378
- ; Postprocessing SW: SEMCAD, V1.8 Build 186

Pin=100mW/Area Scan (91x91x1): Interpolated grid: dx=1.000 mm, dy=1.000 mm
Maximum value of SAR (interpolated) = 22.3 W/kg

Pin=100mW/Zoom Scan (8x8x7)/Cube 0: Measurement grid: dx=4mm, dy=4mm, dz=1.4mm
Reference Value = 73.67 V/m; Power Drift = -0.08 dB
Peak SAR (extrapolated) = 40.9 W/kg
SAR(1 g) = 9.11 W/kg; SAR(10 g) = 2.6 W/kg
Maximum value of SAR (measured) = 22.7 W/kg

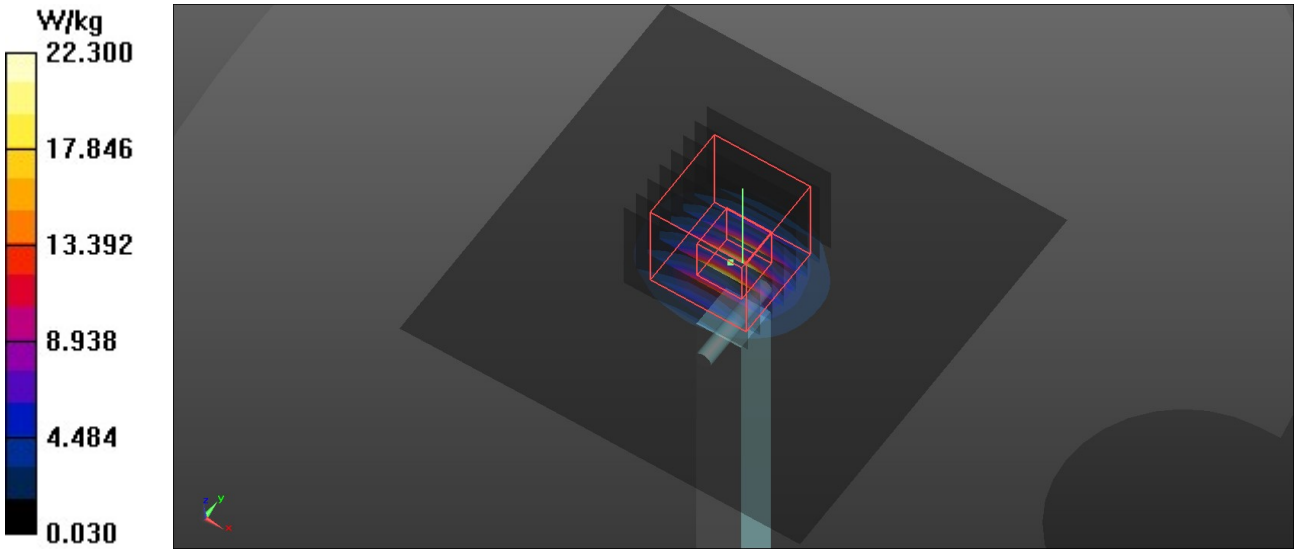

Test Laboratory: UnionTrust Date: 2020/7/6

System Check-D5GHz_H5800

DUT: Dipole D5GHzV2 SN:1280

Communication System: CW; Frequency: 5800 MHz;Duty Cycle: 1:1
Medium: H5G Medium parameters used: f = 5800 MHz; σ = 5.255 S/m; ε_r = 34.62; ρ = 1000 kg/m^3

DASY4 Configuration:
- Probe: EX3DV4 - SN7506; ConvF(4.94, 4.94, 4.94) @ 5800 MHz; Calibrated: 5/29/2020
- Sensor-Surface: 1.4mm (Mechanical Surface Detection)
- Electronics: DAE4 Sn1557; Calibrated: 5/27/2020
- Phantom: SAM 1; Type: QD 000 P40 CB; Serial: TP/1378
- ; Postprocessing SW: SEMCAD, V1.8 Build 186

Pin=100mW/Area Scan (91x91x1): Interpolated grid: dx=1.000 mm, dy=1.000 mm
Maximum value of SAR (interpolated) = 21.2 W/kg
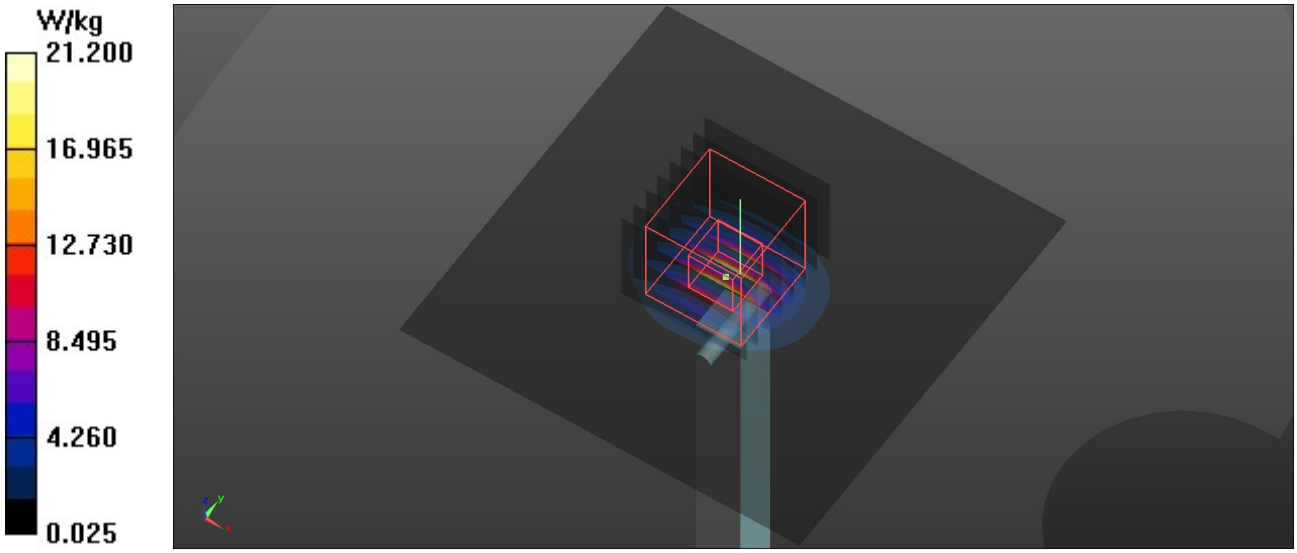
Pin=100mW/Zoom Scan (8x8x7)/Cube 0: Measurement grid: dx=4mm, dy=4mm, dz=1.4mm
Reference Value = 71.53 V/m; Power Drift = 0.05 dB
Peak SAR (extrapolated) = 39.7 W/kg
SAR(1 g) = 8.41 W/kg; SAR(10 g) = 2.38 W/kg
Maximum value of SAR (measured) = 20.7 W/kg