instruction manual

a user guide for the chiliPAD Sleep System

chili™

welcome to the family

it's nice to meet you

The chiliPAD is our most popular sleep system. We can't wait for you to enjoy better sleep.

HOW IT WORKS

The chiliPAD cooling and warming system allows adjustments to be made to your bedding surface. It cools or warms water to your set temperature and circulates it through the Hydronic Pad, achieving temperatures from 55°F (13°C) to 115°F (46°C). The silicone circulation tubes run water throughout the mattress surface to maintain your ideal sleep temperature.

OUR VISION

At Chili, we are at the forefront of sleep-driven health and we are dedicated to advances in sleep engineering. Our goal is to give you a perfect night's sleep by enabling you to personalize your sleep environment.

Sincerely,
The Chili Tribe

CONTENTS

- Control Unit
- Hydronic Pad
- Connector Tube
- Power Cord
- Drain Key
- Remote Control
- Manual

* distilled water not included

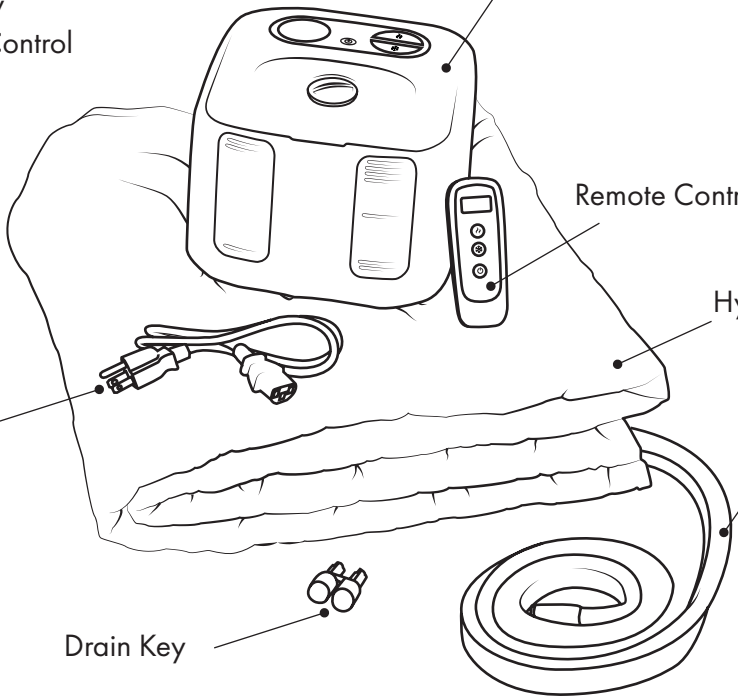

important safety instructions
don't forget to read below

Use of electrical appliances require the following precautions to reduce the risk of electric shock and injury.

Read all instructions before using this system.

DANGER—To reduce the risk of electric shock:
- Always unplug this bed system from electrical outlet before cleaning.

WARNING—To reduce the risk of burns, electric shock, or injury to persons:
- Unplug from outlet before putting on or taking off parts.
- Use close supervision when this cooling and warming bed system is being used by and around children or disabled persons.
- Verify that persons with limited mobility do not use the system remotely unless they are able to operate the control unit within reach.
- Do not use this cooling and warming bed system with infants, disabled persons, persons with diminished capacity or anyone insensitive to heat such as a person with poor blood circulation unless under supervision.
- Use this product only for its intended use as described in these instructions within this manual. Do not use attachments not recommended by the manufacturer.
- Do not operate the system with a damaged cord or plug or after the system malfunctions, has been dropped or damaged in any manner. Return system to authorized service facility for examination and repair.
- Keep the power cord away from heated surfaces.
- Do not use this bed system with any other heated blanket, foot warmer or similar cooling or heating devices.
- Never operate the system with the air openings blocked. Keep the air opening free from any debris like lint, hair and the like.

WARNING: Risk of injury to persons—do not use the cooling and warming bed system to support video equipment such as televisions or computer monitors.

- To prevent a possible fire, do not block air intakes or exhaust in any manner. Do not use on soft surfaces where openings may become blocked.
- Do not insert or allow foreign objects to enter any ventilation or exhaust opening as this may cause an electric shock or fire, or damage the device.
- Do not use outdoors.
- Do not operate where aerosol (spray) products are being used or where oxygen is being administered.
- This system has hot parts inside. Do not use it in areas where gasoline, paint, or flammable liquids are used or stored.
- To disconnect, turn all controls to the off position, then remove plug from outlet. Always plug this product directly into the wall outlet/receptacle. Never use with an extension cord or a power/outlet strip that can be relocated.
- Prevent water back flow out of the reservoir by keeping the cap on the unit at all times after turning the control unit off.
- Let cord hang free. Do not place power cord between mattress and foundation. Do not allow the cords to be pinched. Do not run under carpeting. Do not cover cord with throw rugs, runners, or similar coverings. Do not route power cord under furniture or appliances.
- Arrange power cord away from traffic areas and where it could be tripped over.
- Do not open or break the housing on this cooling and warming device as this will invalidate your warranty.
- Turn off or unplug when not in use.

WARNING: Risk of Electric Shock—Connect the system to properly grounded outlet. See Grounding Instructions.

For loading always put heavier items at the bottom and not near the top in order to help prevent the possibility of the system tipping off.

Notice: The sleep system will perform at its best under a net weight of 250 pounds (90kg). While the hydronic pad does not have a maximum weight limit; as weight increases the performance of the sleep system may diminish.

This device complies with Part 15 of the FCC Rules. Operation is subject to the following two conditions: (1) this device may not cause harmful interference, and (2) this device must accept any interference received, including interference that may cause undesired operation.
Warning: Changes or modifications to this unit not expressly approved by the party responsible for compliance could void the user's authority to operate the equipment.

SAVE THESE INSTRUCTIONS.

RISKS: GROUNDING INSTRUCTIONS

This product must be grounded. This product is equipped with a cord having an equipment-grounding conductor and a grounding plug. Only use a grounded cord. The plug must be plugged into an appropriate outlet that is properly installed and grounded in accordance with all local codes and ordinances.

DANGER! Improper connection of the equipment-grounding conductor can result in a risk of electric shock. Check with a qualified electrician or serviceman if you are in doubt as to whether the product is properly grounded. Do not modify the plug provided with the product – if it will not fit the outlet, have a proper outlet installed by a qualified electrician. This product has a grounding plug that looks like the plug illustrated below.

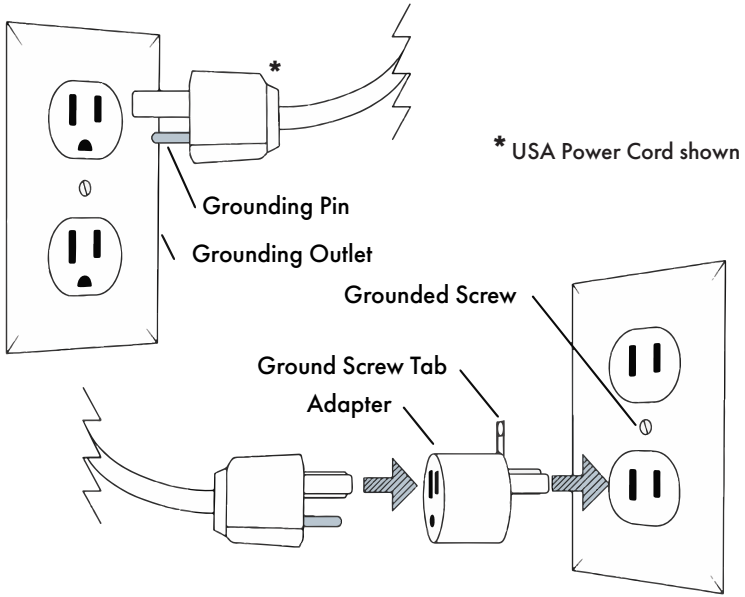

meet your Control Unit
the basics

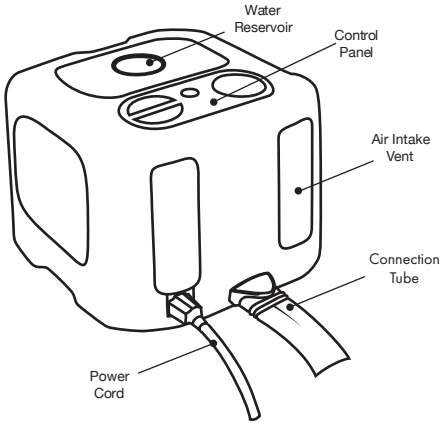

Familiarize yourself with the layout of the Control Unit.

The Control Panel's touch display is easy to use.

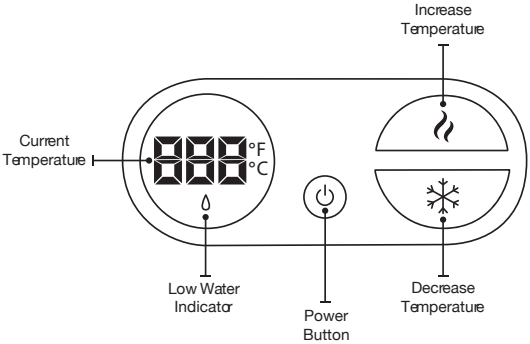

setup your chiliPAD

six easy steps

1. place the hydronic pad

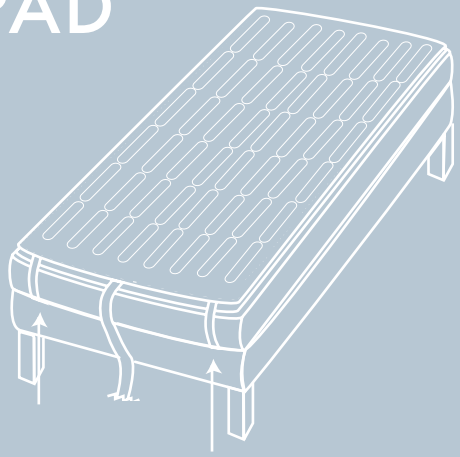

Unfold your chiliPAD and place directly beneath your fitted sheet on top of your mattress. The connection tube(s) can be at the head or foot of the mattress—side up.

ⓘ We recommend placing the chiliPAD on top of a mattress protector to preserve the warranty of your mattress.

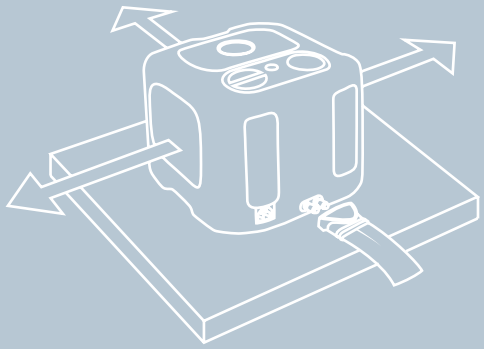

2. connect the tube

Set your Control Unit on a flat surface with at least 18″ (45cm) of breathing area around the four sides of the Control Unit.

Connect the tube from the Hydronic Pad to the Control Unit with the blue release button facing up. Once you hear a click, it's in position.

ⓘ Optionally, use bed risers and place the Control Unit under your bed.

3. power your control unit

Plug the included power cord into the Control Unit, and then into a wall outlet.

ⓘ Use the appropriate wall outlet adapter for your region. (not included)

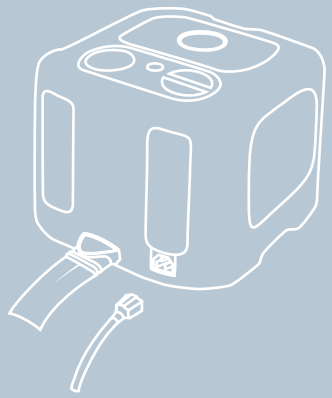

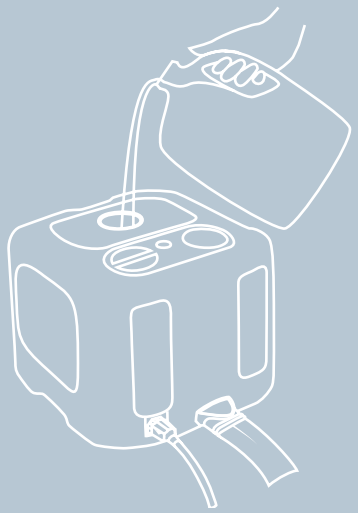

4. fill your control unit

Before turning your Control Unit on, unscrew the top cap and fill with distilled water until full.

Touch the power button to turn it on. The water pump will begin to fill the Hydronic Pad.

Slowly add water until the Control Unit is full and the add water indicator light turns off. Replace cap.

5. control your bed

Press the cooler button (snowflake) to lower the set temperature, and you will see the numbers lowering.

Press the warmer button (flame) to raise set temperature.

ⓘ The numbers will blink 3 times to show temperature adjustment success.

6. pairing your remote

To pair your remote to your Control Unit:

1. Turn off the Control Unit.

2. Hold down the Power Button on the Control Unit until the display flashes "888".

3. Press the Power Button on the Remote.

ⓘ To switch between °F and °C, turn off the Remote, then turn the Control Unit on with the display panel. Press and hold the Remote's On/Off button for 2 seconds.

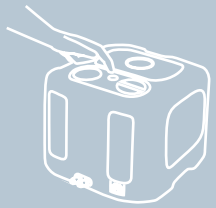

Press and hold the power button on the Control Unit.

Press the power button on the remote.

At what temperature should I sleep?

Everyone has a unique and ideal sleep temperature, which is one of the main reasons people struggle to get deep, rejuvenating sleep on a consistent basis. Ultimately, if you are unsure where to begin, start at 65°F (18°C) and adjust up or down from there.

Here are some tips on how to use your new ChiliPad Sleep System:

COZY BED COOL DOWN

20 minutes before getting into bed, set your chiliPAD to "HI" and as soon as you get into bed, reduce the temperature down to ~65°F (18°C). The decrease in temperature change will trigger your brain to fall asleep faster.

PRE-COOL

If you like getting into a cool bed, simply set your desired cool temperature about 20 minutes before getting into bed.

tips & tricks

your chiliPAD cheat sheet

- A dense blanket or comforter should be placed over your body when the chiliPAD sleep system is in use, to provide the needed insulation to achieve your desired temperature.
- The "LO" setting is 55°F, and set to "HI" the maximum temperature is 115°F. In many cases these temperatures are not fully achieved due to ambient air temperature, humidity in the room, and objects or walls near the Control Unit.
- Please make sure there is at least 18" (45cm) of space on every side of the Control Unit. Fresh flowing air is required for optimal performance and cooling of the internal electronics.
- Inspect the connection tube and Hydronic Pad regularly for kinks and sharp angles that would limit water flow, decreasing the systems's ability to heat or cool.
- Condensation is a natural result of warm and cold temperatures meeting, this applies to the tube and mattress as well. Adjust your room temperature or Control Unit to narrow the difference of temperature, and reduce condensation.

TECHNICAL PARAMETERS

rated voltage	AC 90~230V
rated frequency	50Hz - 60Hz
temperature control	55°-115°F (13°-46°C)
rated power	170W
power	170W
rated amperage	2.2 - 2.3 A

chiliPAD care

maintaining your sleep system

WATER MAINTENANCE

Once per month add one packet of chiliPAD System Cleaner following the instructions below. This cleaner can be purchased at chilitechnology.com

1. Using the drain key, empty the water in the Control Unit's reservoir.

2. Refill with water and add in the chiliPAD System Cleaner. IT IS IMPORTANT THAT YOU LEAVE THE RESERVOIR CAP OFF.

3. Ensure the Control Unit is connected to the Hydronic Pad and run the Control Unit on "HI" for 1 hour.

4. Drain the water mixture from the Control Unit and refill with distilled water.

CLEAN THE EXTERIOR OF THE CONTROL UNIT

With the Control Unit turned off and unplugged, use a clean damp cloth to clean the outside of the Control Unit and remote control. Be careful not to get water inside of the Control Unit.
Use can of compressed air to blow through the intake/exhaust vents on all sides removing dust and debris. Never submerge or get water inside the Control Unit.

WASH THE HYDRONIC PAD AS NEEDED

Wash the Hydronic Pad using a front-loading washing machine with cold water on a gentle/delicate cycle. Secure the connection tubes with the attached Wash Strap to minimize risk of it flailing in the spin cycle and damaging the connector.

DO NOT BLEACH, DO NOT IRON, DO NOT DRY-CLEAN
TUMBLE DRY ON LOW

No Heat/Air

Delicate/ Gentle

Do Not Iron

Do Not Bleach

Do Not Dryclean

Delicate/ Gentle

storing the chiliPAD Sleep System

storing the control unit

To turn the Control Unit off, touch the power button. The display should turn off, but the fans may remain running for a short bit after powering off the Control Unit. Unplug the Control Unit if you will not be using it for 24 hours.

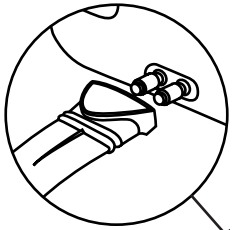

1. Press the Blue Button on connector to release the tube. (a few water drops are expected.)

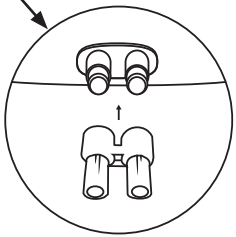

2. Press Drain Key onto the Control Unit's connector to drain.

storing the hydronic pad

Make sure to drain the Hydronic Pad by inserting the included drain key into the end of the Hydronic Pad's connection tube. Ensure the connection is lower than the Hydronic Pad itself to let gravity aid in drainage.

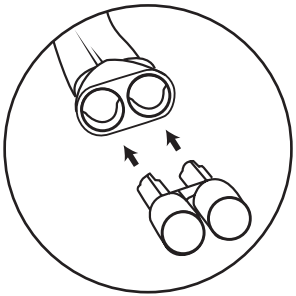

Press Drain Key into Connection Tube.

troubleshooting
try these first!

I PUSHED THE POWER BUTTON AND NOTHING HAPPENS!	• Ensure the wall outlet has power. • Make sure the power cord is securely inserted into the Control Unit. • Add water if the water drop icon appears, see instructions for proper use. • Try replacing the remote batteries if trying to power on the Control Unit with remote.
MY CHILIPAD USED TO COOL AND HEAT MUCH BETTER, NOW IT BARELY REACHES THE TEMPERATURE I SET IT TO!	• Make sure your Control Unit is full of water. • Make sure your Control Unit is on a flat surface, and check for kinks and sharp angles in the water tubing. This should be done regularly. • Using a blanket or something to create an insulated sleeping environment greatly increases the cooling and heating effect of the system.
MY CHILIPAD FEELS WET OR CONDENSATION IS APPEARING ON THE TUBE!	• Adjust the temperature on the Control Unit or Remote up or down in 2 degree increments towards your ambient room temperature, until condensation is no longer a problem.
THE DISPLAY PANEL SHOWS AN "F" ERROR.	• Turn the Control Unit off, unplug, and wait for 15 minutes before turning Control Unit back on. Set ideal temperature. If the code persists, take note of the error code (eg: F1, F2, F3, F4), unplug the Control Unit and contact customer service.

Still need help? We understand! Contact us at help.chilitechnology.com

information
compliance

NOTE: This equipment has been tested and found to comply with the limits for a Class B digital device, pursuant to Part 15 of the FCC Rules. These limits are designed to provide reasonable protection against harmful interference in a residential installation. This equipment generates, uses and can radiate radio frequency energy and, if not installed and used in accordance with the instructions, may cause harmful interference to radio communications. However, there is no guarantee that interference will not occur in a particular installation. If this equipment does cause harmful interference to radio or television reception, which can be determined by turning the equipment off and on, the user is encouraged to try to correct the interference by one or more of the following measures:

-- Reorient or relocate the receiving antenna.

-- Increase the separation between the equipment and receiver.

-- Connect the equipment into an outlet on a circuit different from that to which the receiver is connected.

-- Consult the dealer for help.

deep sleep, delivered

need some help?
we understand.

For a copy of our 90-day Satisfaction Guarantee and 2-Year Limited Product Warranty or for product help, please visit help.chilitechnology.com or contact a customer representative at 877-235-6271 (US) or 1-704-235-6831 (Int'l).

chili™

Kryo, Inc.
144 Talbert Pointe Dr. Ste 103
Mooresville, NC 28117, USA