ORBO

Electric scooter
Instruction Manual

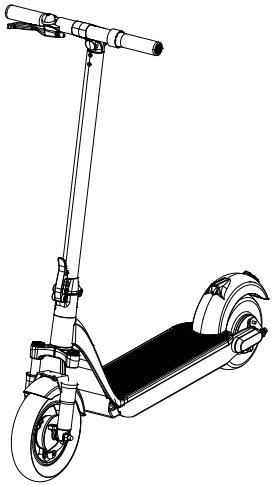

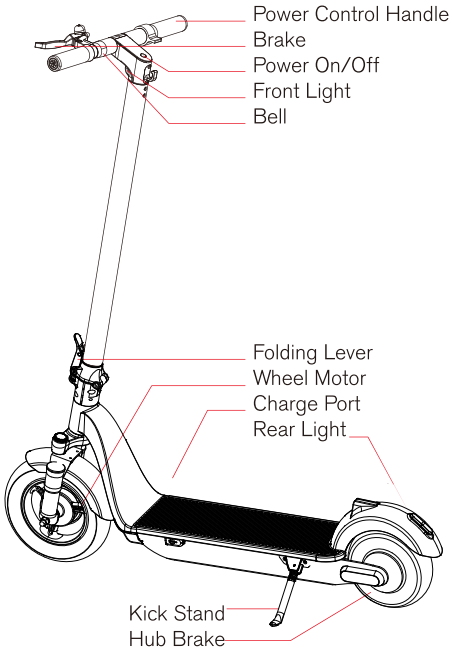

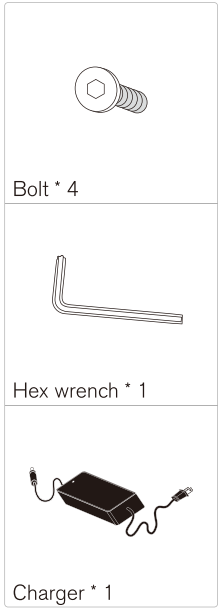

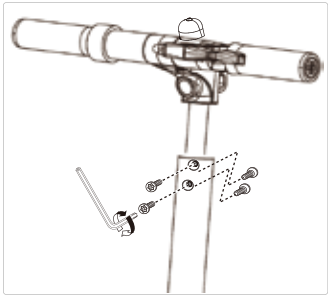

Put the handle bar set into the folding head tube, and keep the brake in the front.

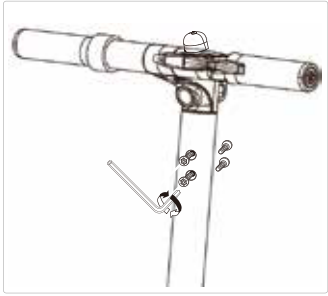

Keep the handle bar set in right position, then tighten the four M4*14mm bolts with 4mm Allen wrench into the corresponding holes.

* Please keep the torque under 50kgf·cm.

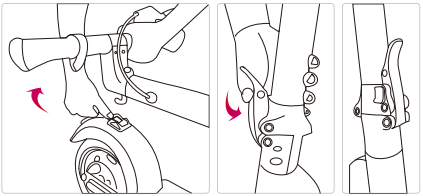

Unfolding your scooter:
Push the hook and lift up the handlebar from the rear fender, then press the folding lever until you hear the click sound.

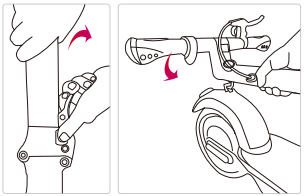

Folding your scooter:
Push the safety button and pull out the folding lever, then put the handlebar into the hook on the rear fender.

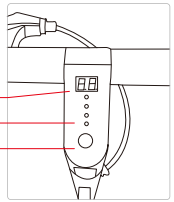

Power:
Turn on/off with pressing the power button for 3 seconds. The speed level will be “00”, and the LED light is on.

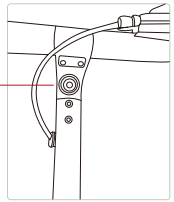

Light:
Lightly turn on/off the front and rear lights with pressing the power button, the rear light will flash when brake.

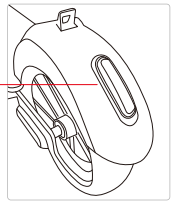

Speed:
System will start with max speed 25 KM/H, you can press the power button twice to switch to second mode max speed 18 KM/H.

Please read all instructions carefully before your ride:

1. Do not ride in the rain.
2. Do not ride on wet floors, potholes, stairs, or any other unsafe surface.
3. Please turn off the power when walking with E-scooter.
4. Intended for single rider only.
5. Maximum rider weight of 110KG.
5. Maximum rider height of 200 CM.
6. Recommended for use with riders of 16 years of age.
7. Please stop use immediately upon damage and contact an authorized dealer.

How to begin each ride:

1. Please read the owner's manual and make sure you are wearing the proper safety equipment including a helmet, knee and elbow protection..
2. Turn on the power and push the scooter by kicking to get initial speed.
3. Control the speed by using the power control handle to accelerate or brake.

Before You Ride

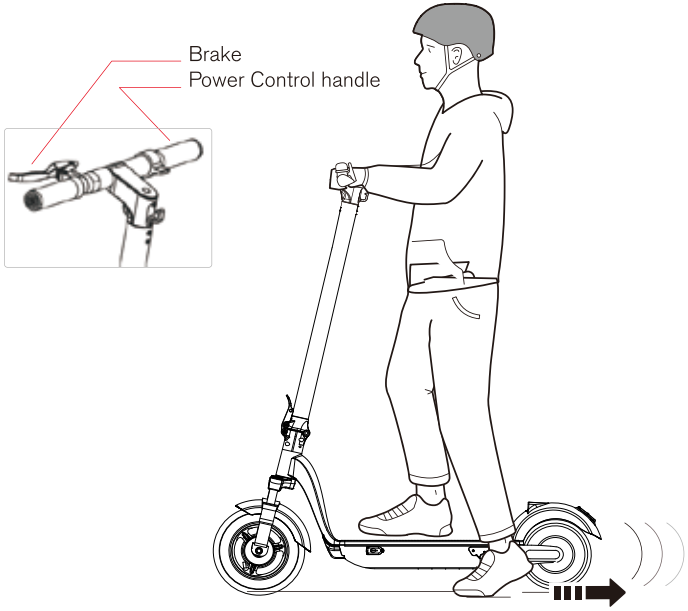

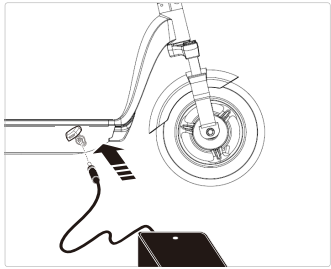

Plug in the charger to the charge port in your E-scooter.

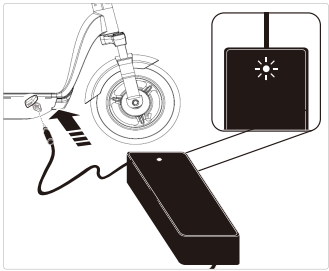

When it starts charging, the red light will display until fully charged, then the light will become green.

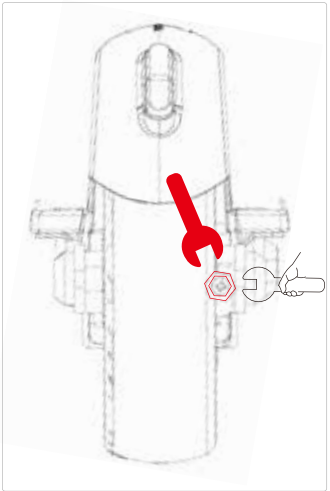

Clamp the 14mm nut from the brake, then loose 9mm nut aside.
Adjust the brake you need, then tighten the 9mm nut back in.

E-Scooter

Rated Power	350W
Battery	36V 10Ah
Charging time	3.5-4 hours
Range	25km
IP Rating	IPX4 water-resistant
Lights	Front and Rear LED lights
Brake system	Electronic brake + Mechanical Hub Brake
Tire	8.5 " Semi solid pneumatic
Maximum speed	25km /h
Climbing ability	8 degree
Weight limit	110KG
Charging temperature	32-104 ° f (0-40 ° C)
Operating temperature	14-104 ° f (- 10-40 ° C)

Specification

Charger

Input voltage	100-240AC 50/60Hz
Output voltage	42VDC
Output current	2.0 amps
Charger model	CP4220 (Coming Data Co., Ltd.)

* The actual achieved by each ride will depend on actual rider weight, road surface, incline, temperature and intensity of acceleration.

Maintenance:

1. Before cleaning the product, be sure to turn off the switch and disconnect the power supply.
2. Please clean the product after each use.
3. The electric scooter can be wiped with a damp cloth. Do not put the E-scooter into water or other liquids, or wash it under water or other liquids.
4. This product should be stored in a clean, dry place out of direct sunlight.
5. Before storing the product, make sure it is clean and dry.

* If you experience problems related to riding, maintenance and safety, or if your electric vehicle appears problems, please contact us.

Safety and Maintenace

Contact information:

Manufacturer：HL Corp Shenzhen
Address：The 3rd Industrial Park , Bitou Village Songgang Town , Baoan District , Shenzhen , China.
Telephone：+86 0755-2713-0185
Website：http://us.hlcorp.com/contact/

The steps to take out the battery pack:

--Turn the product upside down, use the electric screwdriver (hex M2.5) to loosen eight screws in order.

--Turn the product to upright. Remove cover plate and loosen the tail light wire.

--Use electric screw driver (hex M3), loosen the 4 screws on the bracket of the battery pack. The battery pack can be taken out

Battery disposal instructions:

The materials in this product cannot be disposed as normal waste. Please comply with local laws and regulation for disposing or recycling of products with lithium batteries.

-- The battery must be removed from the appliance before it is scrapped.

-- The appliance must be disconnected from the supply mains when removing the battery.

-- The battery is to be disposed of safely.

-- The battery can not be replaced by users.

Use the only power supply be provided" Charge model:
CP4220(Manufacturing: Coming Data Co., Ltd.)

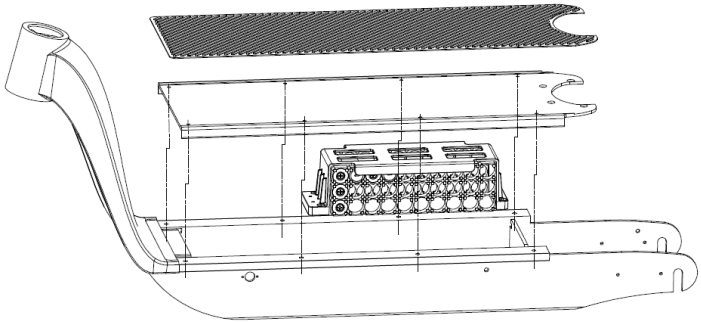

Safety and Maintenace

Display 00. : Undervoltage, indicating that the vehicle battery needs to be charged. After charging, the fault can be removed; when the battery voltage is 30V, the undervoltage fault will be displayed;

Display 01. : Overvoltage, indicating that the controller has detected that the current voltage is too high. If charging, please unplug the charger and long press the power button to shut down; when the battery voltage reaches 46V, it will display an overvoltage fault;

Display 02. : The controller is faulty, indicating that the control is faulty. After long pressing the power button to shut down, turn on again. If the fault still cannot be eliminated, it is recommended to return to the factory for repair;

Display 03. : The controller temperature is too high, please suspend the use of the vehicle, if the fault is not repaired after 10 minutes, press and hold the power button to shut down, and then restart, if the fault still cannot be eliminated, it is recommended to return to the factory for repair;

Display 04. : Communication failure, you need to check whether the communication line interface between the instrument and the control terminal is loose or falling off; if the connection is confirmed to be intact, after the shutdown and restart, the failure cannot be eliminated, it is recommended to return to the factory for repair;

Display 05. : Hall failure, indicating that the Hall wire connecting the controller and the motor is loose or the Hall of the motor itself is damaged; it can be verified by reinserting the connection wire between the controller and the motor. After pulling out, the fault cannot be eliminated, it is recommended to return to the factory for repair;

Display 06. : The throttle handle is faulty, you need to check whether the throttle line is connected successfully and stably with the connecting line on the instrument side. If it is determined that the line is connected properly, then replace the throttle handle to see if the fault can be eliminated. If the fault still cannot be eliminated, It is recommended to return to the factory for repair;

Display 07. : Brake failure, you need to check whether the brake cable is successfully and stably connected to the cable at the instrument end. If the cable is connected properly, the failure cannot be eliminated. It is recommended to return to the factory for repair;

Display 08. : Overcurrent protection, when the current of ESX1 models reaches 17A, or when the current of ESX2/3 models reaches 18A, the system will enter overcurrent protection, which needs to be shut down and restarted to recover. If the fault still cannot be eliminated, it is recommended to return to the factory service;

Caution:

-- Risk of explosion if battery is replaced by an incorrect type in the E-scooter. Dispose of used batteries according to manufacturer instructions and local regulations.
-- Do not dispose of the battery into fire or a hot oven or mechanically crushing or dismantling the battery. This can result in fire or explosion.
-- Do not leave the battery in high temperature environments that can result in an explosion or the leakage of flammable liquid or gas.
-- Do not subject the battery to excessively low air pressure that may result in an explosion or the leakage of flammable liquid or gas.
-- This appliance can be used by children aged from 16 years and above and persons with reduced physical, sensory or mental capabilities or lack of experience and knowledge if they have been given supervision or instruction concerning use of the appliance in a safe way and understand the hazards involved。
-- Children shall not play with the appliance. Cleaning and user maintenance shall not be made by children without supervision
-- the appliance is only to be used with the unit provided
-- Devices are not intended for use at elevations greater than 2000 m above sea level
-- Prolonged Exposure to UV Rays, Rain and the Elements May Damage the Enclosure Materials, Store Indoors When Not in Use
-- WARNING – Risk of Fire – No User Serviceable Parts
-- AVERTISSEMENT- Risque d'incendie et de choc électrique - Aucune des pièces ne peut être réparée par l'utilisateur

FCC Note:

This equipment has been tested and found to comply with the limits for a Class B digital device, pursuant to part 15 of the FCC Rules. These limits are designed to provide reasonable protection against harmful interference in a residential installation. This equipment generates uses and can radiate radio frequency energy and, if not installed and used in accordance with the instructions, may cause harmful interference to radio communications. However, there is no guarantee that interference will not occur in a particular installation. If this equipment does cause harmful interference to radio or television reception, which can be determined by turning the equipment off and on, the user is encouraged to try to correct the interference by one or more of the following measures:

-- Reorient or relocate the receiving antenna.
-- Increase the separation between the equipment and receiver.
-- Connect the equipment into an outlet on a circuit different from that to which the receiver is connected.
-- Consult the dealer or an experienced radio/TV technician for help

Changes or modifications not expressly approved by the party responsible for compliancecould void the user's authority to operate the equipment.
This device complies with Part 15 of the FCC Rules. Operation is subject to the following two conditions:
(1) this device may not cause harmful interference, and
(2) this device must accept any interference received, including interference that may cause undesired operation.

European Union Compliance Statement
Battery recycling information for the European Union

Batteries or packaging for batteries are labeled in accordance with European Directive 2006/66/EC concerning batteries and accumulators and waste batteries and accumulators. The Directive determines the framework for the return and recycling of used batteries and accumulators as applicable throughout the European Union. This label is applied to various batteries to indicate that the battery is not to be thrown away, but rather reclaimed upon end of life per this Directive.

In accordance with the European Directive 2006/66/EC, batteries and accumulators are labeled to indicate that they are to be collected separately and recycled at end of life. The label on the battery may also include a chemical symbol for the metal concerned in the battery (Pb for lead, Hg for mercury, and Cd for cadmium). Users of batteries and accumulators must not dispose of batteries and accumulators as unsorted municipal waste, but use the collection framework available to customers for the return, recycling, and treatment of batteries and accumulators. Customer participation is important to minimize any potential effects of batteries and accumulators on the environment and human health due to the potential presence of hazardous substances.

Restriction of Hazardous Substances Directive (RoHS)

Radio and Telecommunications Terminal Equipment Directive