Luxshare Precision Industry (Kunshan) Co., Ltd

Wireless Charger For Mobile Phone In The Car
15W WACM Tx Controller Specification
（JMC-Ford Motor）

Luxshare

Statement:

All rights reserved by Luxshare Precision Industry (Kunshan) Co.,Ltd (hereinafter referred to as LUXHSAREICT)!

Without the LUXHSAREICT duly authorized in writing, whether to any third party organizations, groups or individuals whether unintentional or intentional, it’s illegal!

Security classification of the document belongs to: business secret.

Content

1 Overview 3
1.1 Overview 3
1.2 Purpose/Scope 3
1.3 Revision Chart 3
1.4 Nouns Definitions Abbreviation 3
1.5 System Definition Abbreviation 4
1.6 References 4
2 Introduction 6
2.1 System Introduction 6
2.2 Mechanical Outline 6
2.2.1 Product 3D View 6
2.2.2 Product 2D 7
2.2.3 Product 2D 8
2.3 Technique Parameters 8
2.3.1 Product Technique Parameters 8
2.4 System Block Diagram 10
2.5 Ports Definition 10
2.5.1 Input/Output Electical Characteristics Logogram Table 10
2.5.2 Main Body Connector Definition 11
2.5.3 Wire Harness Connector Definition 12
2.6 Coil Definition 14
2.6.1 Coil Dimension MP-A9 14
2.6.2 Bottom Coil Dimensions Specification 14
2.6.3 Top Coil Dimensions Specification 15
2.6.4 Coil Specification 15

Luxshare

Copyright © 2016~2019 Luxshare Precision Industry (Kunshan) Co.,Ltd All Rights Reserved.

1 Overview

1.1 Overview

This document belongs to LUXHSAREICT;

This document was initially applied to the Tx controller of JMC Ford Car Mobile Wireless Charging Module;

The product is currently used in the JMC Ford CX743 and subsequent derivative vehicles

If there is any misunderstanding between English and Chinese in this document, please refer to the meaning in Chinese.

1.2 Purpose/Scope

The readers of this document include project managers, design developers, testers, quality assurance personnel, and documentation writers.

1.3 Revision Chart

Char1-1

Version:	Date:	Writer:	Description:
Verision 0.0.0	2018-03-20	LinweiWang	First edition
Verision 0.0.1	2018-08-11	Hua Jiang	Update the specification ,according to Qi 1.2.4 standard

1.4 Nouns Definitions Abbreviation

The following abbreviations or acronyms used throughout the specification:

Char1-2

Item	Description
Luxshare-ICT	Luxshare Precision Industry (Kunshan) Co.,Ltd
WPC	Wireless Power consortium
Qi	Qi Standard
Q	Quality factor
Tx	Power Transmitter
Start-Stop	Start-Stop System
DC/DC	Direct Current to Direct Current Converter
PEPS	Passive Entry Passive Start
IPC	Instrument Panel cluster
IGN	Ignition
ISG	Ignite Start engine Cranking Signal

Luxshare

Copyright © 2016~2019 Luxshare Precision Industry (Kunshan) Co.,Ltd All Rights Reserved.

AMS	Automobile Multimedia System
FOD	Foreign Object Detection
CAN BUS	Controller Area Network-BUS
DTC	Diagnostic Trouble Code
EMC	Electro Magnetic Compatibility
KL.15	Ignition Supply
KL.30	Battery Positive
KL.31	Battery Negative
FSC	Functional Status Classification
DUT	Device Under Testing
TBD	To Be Defined
NC	NO Change

1.5 System Definition Abbreviation

Chart 1-3

Item	Description
Coil	Tx MP-A9 Three Coils
Full Load	Max. Power
Half Load	Half of the Max. power
Transfer Efficiency	Output power compares to Input power

1.6 References

1. 《Qi The Qi Wireless Power Transfer System Power Class 0 Specification》V1.2.4。 The wireless charging protocol standard refers to《Qi The Qi Wireless Power Transfer System Power Class 0 Specification》V1.2.4
2. Coil specification refers to 《Qi Spec--MP-A9 Coil》
3. Test standards：
   《ISO 16750-1-2006》
   《ISO 16750-2-2010》
   《ISO 16750-3-2012》
   《ISO 16750-4-2010》
4. Communiction standards specification：
   《CAN BUS 2.0 Communiction Protocol》
5. Components and parts electromagnetic compatibility test refers to:
   《CISPR 25:2008》
   《ISO 7637-2:2011》
   《ISO 7637-3:2007》
   《ISO 11452-2:2004》
   《ISO 11452-4:2011》

Luxshare

Copyright © 2016~2019 Luxshare Precision Industry (Kunshan) Co.,Ltd All Rights Reserved.

《ISO 10605:2008》

Luxshare

Copyright © 2016~2019 Luxshare Precision Industry (Kunshan) Co.,Ltd All Rights Reserved.

2 Introduction

2.1 System Introduction

This specification describes an automotive Wireless Charging Module(Hereinafter referred to as WACM);

WCAM usesan an Electromagnetic induction technique;

It is applied to vehicles and provides wireless power transmission to the mobile phone that meets the conditions, which can ensure that the power received by the receivers is 15W Max.;

The WACM terminal load decvices are wireless power receivers that meet the Qi standard, such as a mobile phone , a watch, or other electronic devices.

2.2 Mechanical Outline

2.2.1 Product 3D View

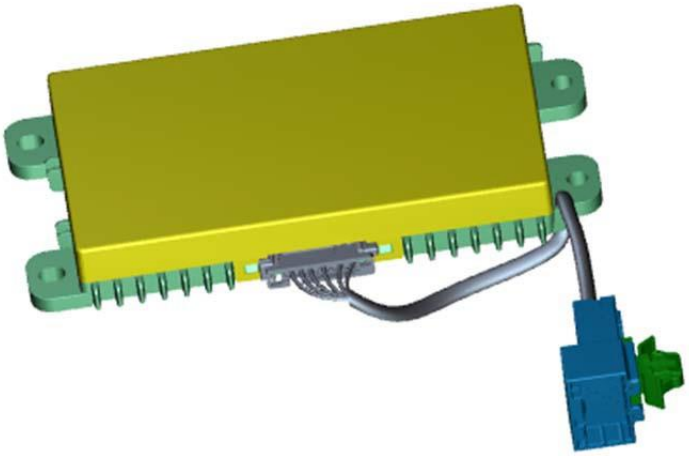

Lare

Copyright © 2016~2019 Luxshare Precision Industry (Kunshan) Co.,Ltd All Rights Reserved.

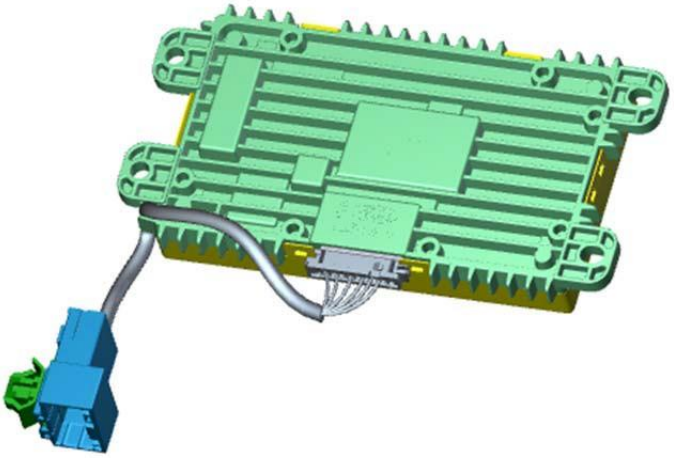

Chart2-1

2.2.2 Product 2D

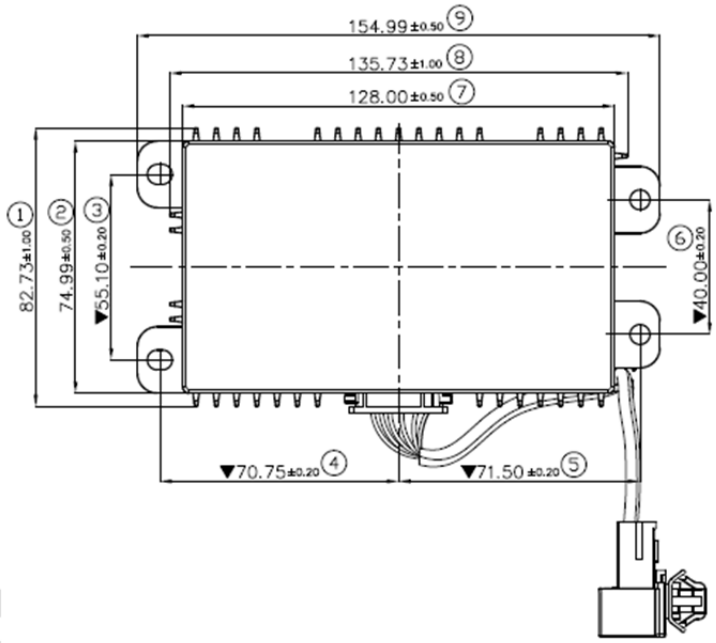

Copyright © 2016~2019 Luxshare Precision Industry (Kunshan) Co.,Ltd All Rights Reserved.

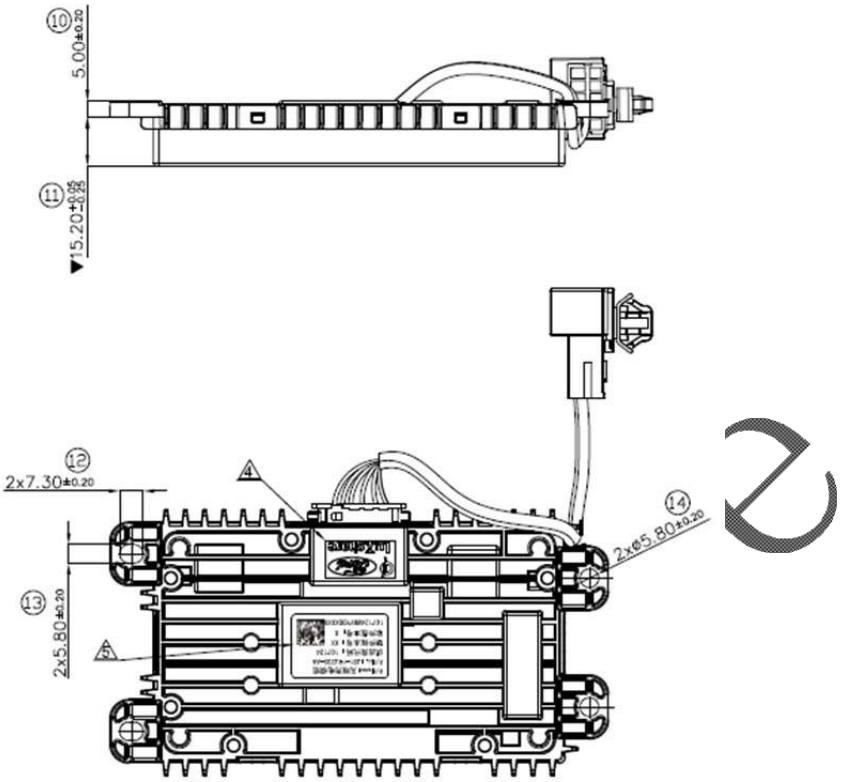

Chart2-2

2.2.3 Product 2D

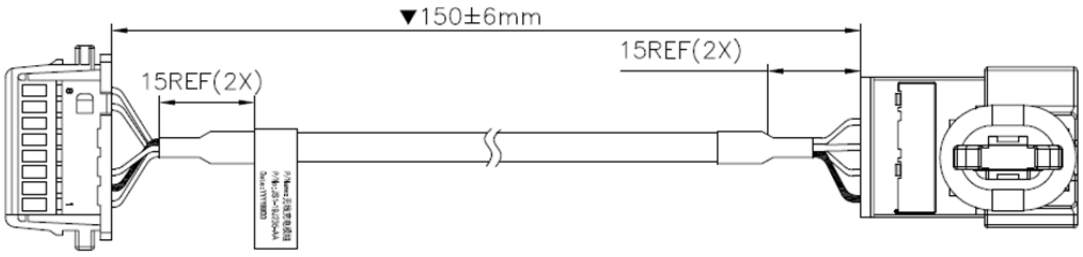

Chart2-3

2.3 Technique Parameters

2.3.1 Product Technique Parameters

Electrical Specification	Parameters	Range
Output Spec.	Max. Output Power	15W Max
Temperature Range	WACM Operating Temperature Range	-40℃~65℃ (>65℃, Over-temperature Protection)
	Storeage Temperature Range	-40℃~85℃

Copyright © 2016~2019 Luxshare Precision Industry (Kunshan) Co.,Ltd All Rights Reserved.

Operating Voltage Range	Wireless Charger Function		Nominal：9~16V（Hysteresis interval exists，8~9V，16~18V also works）
	Communication Function Module		6~18V
	Rated Operating Voltage		12.4V
	Curre nt	Max. Output Current	3A
	Efficie ncy	Efficiency at Max. efficient point when input voltage is 12.4v.	＞70%
Current Consumption	Operatiing Current in －load mode		≤100mA
暗电流 Dark Current	ACC or IGN OFF		≤0.1mA
Operating Frequency	Wireless Charger switching frequency		125KHz±5KHz Nomal operating frequency is 127.7KHz
Charging Distance	Tx Coil to Rx Coil		10mm Max
FOD	Support		Meet Qi standard
Moblie phone Forgotten Reminder Function	Support		/
IP Grade	Dustproof/Waterproof		IP5K0
Cooling Method	/		Natural cooling
Communication Method	CAN BUS		2.0
Blank Below			

Chart2-4

Luxshare

Copyright © 2016~2019 Luxshare Precision Industry (Kunshan) Co.,Ltd All Rights Reserved.

2.4 System Block Diagram

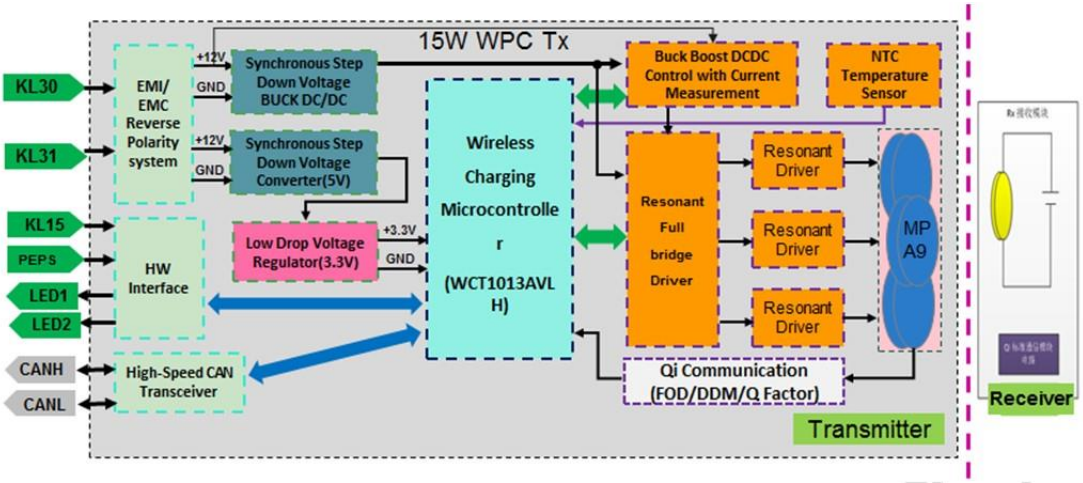

2-6 Chart System Schematic

2.5 Ports Definition

2.5.1 Input/Output Electical Characteristics Logogram Table

logogram	explanation	备注 Remark
AD-I	Analog signal input	
DL-I	Connector port low input is effective	
DH-I	Connector port high input is effective	
-WeekUp	External wake-up input	
H-O（P）	High drive output（P represent high power）	
H-SMOS（DTC）	High drive output（Chip includes MOS drive ， and has self-diagnosis protection）	
H-MCD	High drive output. Low-power output with diagnostic.	
L-SMOS	Low drive output	
COMM	Communication Port	
Power	Power Port	

Chart2-7 Port Features

Luxshare

Copyright © 2016~2019 Luxshare Precision Industry (Kunshan) Co.,Ltd All Rights Reserved.

2.5.2 Main Body Connector Definition

Connector Shape Figure	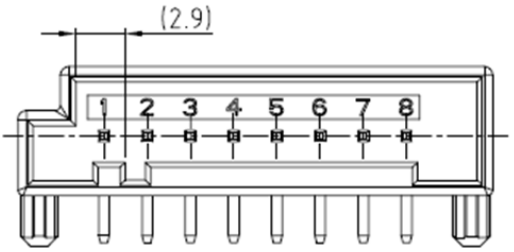 **Male prot type : luxshare** **Female prot type: TE ：1743282-1，TE:5-963715-1**				
NO.	**Pin NO.**	**PIN Definition**	**IO Characteristics**	**Port Current**	**Remark**
1	A1	KL.30 B+ Power Input	Power	5A Max	
2	A2	Green LED Driver output	L-SMOS	20mA Max	Reserved
3	A3	PEPS Disable	DL-I	10mA Max	
4	A4	KL.31 GND Power Ground	Power	5A Max	
5	A5	CAN_H	COMM	500mA	
6	A6	CAN_L	COMM	500mA	
7	A7	Red LED Driver output	L-SMOS	20mA	Reserved
8	A8	IGN （KL.15）Power mode input	DH-I，-WeekUp	20mA	
		Blank Below			

Chart 2-8 Port De ignition

Luxshare

Copyright © 2016~2019 Luxshare Precision Industry (Kunshan) Co.,Ltd All Rights Reserved.

2.5.3 Wire Harness Connector Definition

Connector Shape Figure	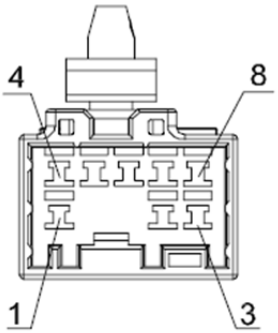			
NO.	**Pin NO.**	**PIN Definition**	**IO Characteristics**	**Port Current**
1	B1	KL.30 B+ Power Input	Power	5A Max
2	B2	IGN （KL.15） Power mode input	DH-L，~WeekUp	20mA
3	B3	/	/	/
4	B4	KL.31 GND Power Ground	Power	5A Max
5	B5	CAN_H	COMM	500mA
6	B6	CAN_L	COMM	500mA
7	B7	NC		
8	B8	NC		
		Blank Below		

Chart 2-9 Port Definition

Luxshare

Copyright © 2016~2019 Luxshare Precision Industry (Kunshan) Co.,Ltd All Rights Reserved.

Connector Shape Figure	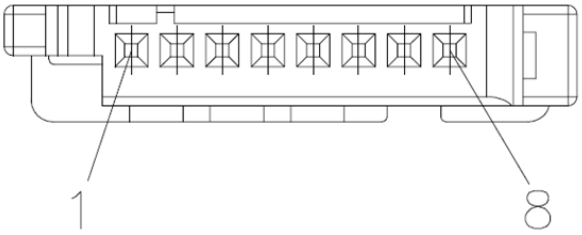 **Female prot type: TE ：1743282-1， TE:5-963715-1 Match Port: Wireless Charger main body connector**

NO.	Pin NO.	PIN Definition	IO Characteristics	Port Current	Remark
1	A1	KL.30 B+ Power Input	Power	5A Max	
2	A2	Green LED Driver output	L-SMOS	20mA Max	Reserved
3	A3	PEPS Disable	DL-I	10mA Max	
4	A4	KL.31 GND Power Ground	Power	5A Max	
5	A5	CAN_H	COMM	500mA	
6	A6	CAN_L	COMM	500mA	
7	A7	Red LED Driver output	L-SMOS	20mA	Reserved
8	A8	IGN （KL.15）Power mode input	DH-I，-WeekUp	20mA	
		Blank Below			

Chart 2-10 Port Definition

Luxshare

Copyright © 2016~2019 Luxshare Precision Industry (Kunshan) Co.,Ltd All Rights Reserved.

2.6 Coil Definition

2.6.1 Coil Dimension MP-A9

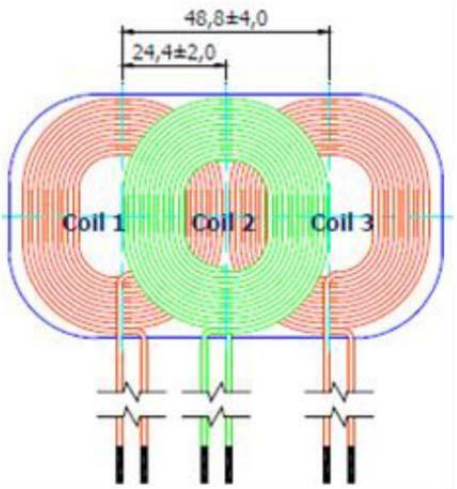

Chart 2-11 Primary Coils of Power Transmitter design MP-A9

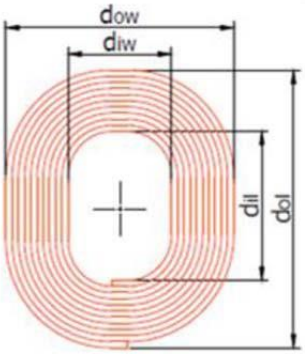

Chart 2-12 Primary Coil of Power Transmitter design MP-A9 **2.6.2**

Bottom Coil Dimensions Specification

NO.	Parameter	Symbol	Value	Remark
1	Outer length	dol	53.0 ± 1.5 mm	
2	Inner length	dil	27.5 ± 0.5 mm	
3	Outer width	dow	46.7 ± 1.5 mm	
4	Inner width	diw	20.5 ± 0.5 mm	
5	Thickness	dc	1.6 ± 0.5 mm	
6	Number of turns per layer	N	11	
7	Number of layers	–	1	
	Blank Below			

Chart 2-13 Bottom Primary Coil parameters of Power Transmitter design MP-A9

Copyright © 2016~2019 Luxshare Precision Industry (Kunshan) Co.,Ltd All Rights Reserved.

2.6.3 Top Coil Dimensions Specification

NO.	Parameter	Symbol	Value	Remark
1	Outer length	dol	53.0±1.5 mm	
2	Inner length	dil	25.2±0.5 mm	
3	Outer width	dow	48.1±1.5 mm	
4	Inner width	diw	19.5±0.5 mm	
5	Thickness	dc	1.6±0.5 mm	
6	Number of turns per layer	N	12	
7	Number of layers	–	1	
	Blank Below			

Chart 2-14 Top Primary Coil parameters of Power Transmitter design MP-A9

2.6.4 Coil Specification

NO.	Item	Specifications	Typ.	Remark
1	Self-inductance of coil1coil3	9.8uH±10%	9.75uH	@100kHz1.0V
2	Self-inductance of coil2	10.2uH±10%	10.2uH	@100kHz1.0V
3	Operating Temperature	-40℃~+85℃		
4	Storage Temperature	-40℃~+85℃		
5	Magnetic Core Material	Ferrite PC95	Equivalent Material	TBD
6	Operating Frequency	120~130KHz	125KHz	
	Blank Below			

Chart 2-15 Coil parameters of Power Transmitter design MP-A9

Luxshare

Copyright ∧ 2016~2019 Luxshare Precision Industry (Kunshan) Co.,Ltd All Rights Reserved.

FCC Statement

This device complies with part 15 of the FCC Rules. Operation is subject to the following two conditions: (1) This device may not cause harmful interference, and (2) this device must accept any interference received, including interference that may cause undesired operation.

Any Changes or modifications not expressly approved by the party responsible for compliance could void the user's authority to operate the equipment.

Note: This equipment has been tested and found to comply with the limits for a Class B digital device, pursuant to part 15 of the FCC Rules. These limits are designed to provide reasonable protection against harmful interference in a residential installation. This equipment generates uses and can radiate radio frequency energy and, if not installed and used in accordance with the instructions, may cause harmful interference to radio communications. However, there is no guarantee that interference will not occur in a particular installation. If this equipment does

cause harmful interference to radio or television reception, which can be determined by turning the equipment off and on, the user is encouraged to try to correct the interference by one or more of the following measures:

-Reorient or relocate the receiving antenna.

-Increase the separation between the equipment and receiver.

-Connect the equipment into an outlet on a circuit different from that to which the receiver is connected.

-Consult the dealer or an experienced radio/TV technician for help.

RF warning for Mobile device:

This equipment complies with FCC radiation exposure limits set forth for an uncontrolled environment. This equipment should be installed and operated with minimum distance 20cm between the radiator & your body.

Luxshare

Copyright ∧ 2016~2019 Luxshare Precision Industry (Kunshan) Co.,Ltd All Rights Reserved.