FCC TEST REPORT
FCC ID:2AURI-ZX-DB10

Report Number.....:	**ZKT-2212129263**
Date of Test.....	Dec. 19, 2022 to Mar. 21, 2023
Date of issue.....:	Mar. 21, 2023
Total number of pages.....	30
Test Result .....:	PASS
Testing Laboratory.....:	**Shenzhen ZKT Technology Co., Ltd.**
Address .....:	1/F, No. 101, Building B, No. 6, Tangwei Community Industrial Avenue, Fuhai Street, Bao'an District, Shenzhen, China
Applicant's name .....:	**Shenzhen Smartrol Technology Limited**
Address .....:	6F, Leishi Industrial Park, NO.1119, Guanlan Guanguang Road, Longhua District, Shenzhen, China
Manufacturer's name .....:	**Shenzhen Smartrol Technology Limited**
Address .....:	6F, Leishi Industrial Park, NO.1119, Guanlan Guanguang Road, Longhua District, Shenzhen, China
Test specification:	
Standard.....:	FCC CFR Title 47 Part 15 Subpart C Section 15.231 ANSI C63.10:2013
Test procedure.....:	/
Non-standard test method .....:	N/A
Test Report Form No.....:	TRF-EL-108_V0
Test Report Form(s) Originator.....:	ZKT Testing
Master TRF .....:	Dated: 2020-01-06

This device described above has been tested by ZKT, and the test results show that the equipment under test (EUT) is in compliance with the FCC requirements. And it is applicable only to the tested sample identified in the report.
This report shall not be reproduced except in full, without the written approval of ZKT, this document may be altered or revised by ZKT, personal only, and shall be noted in the revision of the document.

Product name.....:	**Wireless doorbell**
Trademark .....:	N/A
Model/Type reference.....:	ZX-DB10 ZX-DB11,ZX-DB10B,ZX-DB10T,ZX-DB10R,ZX-DB11B,ZX-DB13, ZX-D30T,ZX-DB20,ZX-DB20T
Ratings.....:	Input:DC 3VBattery

Testing procedure and testing location:

Testing Laboratory.....:	**Shenzhen ZKT Technology Co., Ltd.**
Address.....:	1/F, No. 101, Building B, No. 6, Tangwei Community Industrial Avenue, Fuhai Street, Bao'an District, Shenzhen, China
Tested by (name + signature).....:	Jim Liu
Reviewer (name + signature).....:	Tom Zou
Approved (name + signature).....:	Lake Xie

Table of Contents **Page**

1. VERSION **5**

2. SUMMARY OF TEST RESULTS **6**

2.1 TEST FACILITY **7**

2.2 MEASUREMENT UNCERTAINTY **7**

3.GENERAL INFORMATION **8**

3.1 GENERAL DESCRIPTION OF EUT **8**

3.2 DESCRIPTION OF TEST MODES **9**

3.3 BLOCK DIGRAM SHOWING THE CONFIGURATION OF SYSTEM TESTED **9**

3.4 DESCRIPTION OF SUPPORT UNITS(CONDUCTED MODE) **9**

3.5 EQUIPMENTS LIST FOR ALL TEST ITEMS **10**

4. EMC EMISSION TEST **12**

4.1 CONDUCTED EMISSION MEASUREMENT **12**

4.1.1 POWER LINE CONDUCTED EMISSION LIMITS **12**

4.1.2 TEST PROCEDURE **13**

4.1.3 DEVIATION FROM TEST STANDARD **13**

4.1.4 TEST SETUP **13**

4.1.5 EUT OPERATING CONDITIONS **13**

4.1.6 TEST RESULTS **13**

4.2 RADIATED EMISSION MEASUREMENT **14**

4.2.1 RADIATED EMISSION LIMITS **14**

4.2.2 TEST PROCEDURE **15**

4.2.3 TEST SETUP **16**

4.2.4 EUT OPERATING CONDITIONS **17**

4.2.5 TEST RESULTS **17**

5.1 APPLIED PROCEDURES / LIMIT **22**

5.2 TEST PROCEDURE **22**

5.3 DEVIATION FROM STANDARD **22**

5.4 TEST SETUP **22**

5.5 EUT OPERATION CONDITIONS **22**

5.6 TEST RESULTS **23**

6. CALCULATION OF AVERAGE FACTOR **24**

7. DWELL TIME **27**

7.1 APPLICABLE STANDARD **27**

7.2 TEST PROCEDURE **27**

7.5 EUT OPERATION CONDITIONS **27**

7.6 TEST RESULTS **28**

Table of Contents **Page**

8. ANTENNA REQUIREMENT **29**

9. TEST SETUP PHOTO **30**

10. EUT CONSTRUCTIONAL DETAILS **30**

1. VERSION

Report No.	Version	Description	Approved
ZKT-2212129263	Rev.01	Initial issue of report	Mar. 21, 2023

2. SUMMARY OF TEST RESULTS

Test procedures according to the technical standards:

FCC Part15 (15.231) , Subpart C			
Standard Section	Test Item	Judgment	Remark
15.207	Conducted Emission	N/A	
15.209,15.231b	Fundamental &Radiated Spurious Emission Measurement	PASS	
15.231c	Occupy Bandwidth	PASS	
15.231a	Dwell time	PASS	
15.203	Antenna Requirement	PASS	

NOTE:

(1)" N/A" denotes test is not applicable in this Test Report

2.1 TEST FACILITY

Shenzhen ZKT Technology Co., Ltd.
Add. : 1/F, No. 101, Building B, No. 6, Tangwei Community Industrial Avenue, Fuhai Street, Bao'an District, Shenzhen, China

FCC Test Firm Registration Number: 692225
Designation Number: CN1299
IC Registered No.: 27033
CAB identifier: CN0110

2.2 MEASUREMENT UNCERTAINTY

The reported uncertainty of measurement y ± U · where expended uncertainty U is based on a standard uncertainty multiplied by a coverage factor of k=2 · providing a level of confidence of approximately 95 %。

No.	Item	Uncertainty
1	3m camber Radiated spurious emission(9KHz-30MHz)	U=4.5dB
2	3m camber Radiated spurious emission(30MHz-1GHz)	U=4.8dB
3	3m chamber Radiated spurious emission(1GHz-6GHz)	U=4.9dB
4	3m chamber Radiated spurious emission(6GHz-40GHz)	U=5.0dB
5	Conducted disturbance	U=3.2dB
6	RF Band Edge	U=1.68dB
7	RF power conducted	U=1.86dB
8	RF conducted Spurious Emission	U=2.2dB
9	RF Occupied Bandwidth	U=1.8dB
10	RF Power Spectral Density	U=1.75dB
11	humidity uncertainty	U=5.3%
12	Temperature uncertainty	U=0.59℃

3. GENERAL INFORMATION

3.1 GENERAL DESCRIPTION OF EUT

Equipment	Wireless doorbell
Trade Name	N/A
Model Name	ZX-DB10
Serial Model	ZX-DB11,ZX-DB10B,ZX-DB10T,ZX-DB10R,ZX-DB11B, ZX-DB13,ZX-D30T,ZX-DB20,ZX-DB20T
Model Difference	Only for different model name.
Hardware version	H1.0
Software version	S1.0
Operation Frequency:	433.92MHz
Modulation Type:	ASK
Antenna Type:	PCB Antenna
Antenna Gain:	-2.12dBi
Ratings	DC 3VBattery

3.2 DESCRIPTION OF TEST MODES

For All Emission	
Final Test Mode	Description
Transmitting mode	Keep the EUT in continuously transmitting mode

Note:

(1) Fully-charged battery is used during the test

3.3 BLOCK DIGRAM SHOWING THE CONFIGURATION OF SYSTEM TESTED

RE Spurious emissions

E-1
EUT

3.4 DESCRIPTION OF SUPPORT UNITS(CONDUCTED MODE)

The EUT has been tested as an independent unit together with other necessary accessories or support units. The following support units or accessories were used to form a representative test configuration during the tests.

Item	Equipment	Mfr/Brand	Model/Type No.	Series No.	Note
E-1	Wireless doorbell	N/A	ZX-DB10	N/A	EUT

Item	Shielded Type	Ferrite Core	Length	Note

Note:

(1) The support equipment was authorized by Declaration of Confirmation.
(2) For detachable type I/O cable should be specified the length in cm in『Length』column.
(3) “YES” is means “shielded” “with core”; “NO” is means “unshielded” “without core”.

3.5 EQUIPMENTS LIST FOR ALL TEST ITEMS

Radiation Test equipment

Item	Equipment	Manufacturer	Type No.	Serial No.	Last calibration	Calibrated until
1	Spectrum Analyzer (9kHz-26.5GHz)	KEYSIGHT	9020A	MY55370835	Oct. 28, 2022	Oct. 27, 2023
2	Spectrum Analyzer (10kHz-39.9GHz)	R&S	FSQ	100363	Oct. 28, 2022	Oct. 27, 2023
3	EMI Test Receiver (9kHz-7GHz)	R&S	ESCI7	101169	Oct. 28, 2022	Oct. 27, 2023
4	Bilog Antenna (30MHz-1500MHz)	Schwarzbeck	VULB9168	N/A	Nov. 02, 2022	Nov. 01, 2023
5	Horn Antenna (1GHz-18GHz)	Agilent	AH-118	071145	Nov. 01, 2022	Oct. 31, 2023
6	Horn Antenna (15GHz-40GHz)	A.H.System	SAS-574	588	Oct. 28, 2022	Oct. 27, 2023
7	Loop Antenna	TESEQ	HLA6121	58357	Nov. 01, 2022	Oct. 31, 2023
8	Amplifier (30-1000MHz)	EM Electronics	EM330 Amplifier	060747	Nov. 15, 2022	Nov. 14, 2023
9	Amplifier (1GHz-26.5GHz)	Agilent	8449B	3008A00315	Oct. 28, 2022	Oct. 27, 2023
10	Amplifier (500MHz-40GHz)	全聚达	DLE-161	097	Oct. 28, 2022	Oct. 27, 2023
11	Test Cable	N/A	R-01	N/A	Oct. 28, 2022	Oct. 27, 2023
12	Test Cable	N/A	R-02	N/A	Oct. 28, 2022	Oct. 27, 2023
13	Test Cable	N/A	R-03	N/A	Oct. 28, 2022	Oct. 27, 2023
14	Test Cable	N/A	RF-01	N/A	Oct. 28, 2022	Oct. 27, 2023
15	Test Cable	N/A	RF-02	N/A	Oct. 28, 2022	Oct. 27, 2023
16	Test Cable	N/A	RF-03	N/A	Oct. 28, 2022	Oct. 27, 2023
17	ESG Signal Generator	Agilent	E4421B	N/A	Oct. 21, 2022	Oct. 20, 2023
18	Signal Generator	Agilent	N5182A	N/A	Oct. 21, 2022	Oct. 20, 2023
19	Magnetic Field Probe Tester	Narda	ELT-400	0-0344	Nov. 15, 2022	Nov. 14, 2023
20	Wideband Radio Communication Test	R&S	CMW500	106504	Oct. 28, 2022	Oct. 27, 2023
21	MWRF Power Meter Test system	MW	MW100-RPCB	N/A	Oct. 21, 2022	Oct. 20, 2023
22	D.C. Power Supply	LongWei	TPR-6405D	N/A	\	\
23	EMC Software	Frad	EZ-EMC	Ver.EMC-CON 3A1.1	\	\
24	RF Software	MW	MTS8310	V2.0.0.0	\	\
25	Turntable	MF	MF-7802BS	N/A	\	\
26	Antenna tower	MF	MF-7802BS	N/A	\	\

Conduction Test equipment

Item	Kind of Equipment	Manufacturer	Type No.	Serial No.	Last calibration	Calibrated until
1	LISN	R&S	ENV216	101471	Oct. 21, 2022	Oct. 20, 2023
2	LISN	CYBERTEK	EM5040A	E1850400149	Oct. 21, 2022	Oct. 20, 2023
3	Test Cable	N/A	C-01	N/A	Oct. 21, 2022	Oct. 20, 2023
4	Test Cable	N/A	C-02	N/A	Oct. 21, 2022	Oct. 20, 2023
5	Test Cable	N/A	C-03	N/A	Oct. 21, 2022	Oct. 20, 2023
6	EMI Test Receiver	R&S	ESCI3	101393	Oct. 28, 2022	Oct. 27, 2023
7	EMC Software	Frad	EZ-EMC	Ver.EMC-CON 3A1.1	\	\

4. EMC EMISSION TEST

4.1 CONDUCTED EMISSION MEASUREMENT

Test Requirement:	FCC Part15 C Section 15.207
Test Method:	ANSI C63.10:2013
Test Frequency Range:	150KHz to 30MHz
Receiver setup:	RBW=9KHz, VBW=30KHz, Sweep time=auto

4.1.1 POWER LINE CONDUCTED EMISSION LIMITS

(Frequency Range 150KHz-30MHz)

FREQUNCY (MHz)	Limit (dBuV)		Standard
	Quasi-peak	Average	
0.15 -0.5	66 - 56 *	56 - 46 *	FCC
0.50 -5.0	56.00	46.00	FCC
5.0 -30.0	60.00	50.00	FCC

Note:

(1) The tighter limit applies at the band edges.

(2) The limit of " * " marked band means the limitation decreases linearly with the logarithm of the frequency in the range.

The following table is the setting of the receiver

Receiver Parameters	Setting
Attenuation	10 dB
Start Frequency	0.15 MHz
Stop Frequency	30 MHz
IF Bandwidth	9 kHz

4.1.2 TEST PROCEDURE

a. The EUT was placed 0.8 meters from the horizontal ground plane with EUT being connected to the power mains through a line impedance stabilization network (LISN). All other support equipments powered from additional LISN(s). The LISN provide 50 Ohm/ 50uH of coupling impedance for the measuring instrument.
b. Interconnecting cables that hang closer than 40 cm to the ground plane shall be folded back and forth in the center forming a bundle 30 to 40 cm long.
c. I/O cables that are not connected to a peripheral shall be bundled in the center. The end of the cable may be terminated, if required, using the correct terminating impedance. The overall length shall not exceed 1 m.
d. LISN at least 80 cm from nearest part of EUT chassis.
e. For the actual test configuration, please refer to the related Item –EUT Test Photos.

4.1.3 DEVIATION FROM TEST STANDARD

No deviation

4.1.4 TEST SETUP

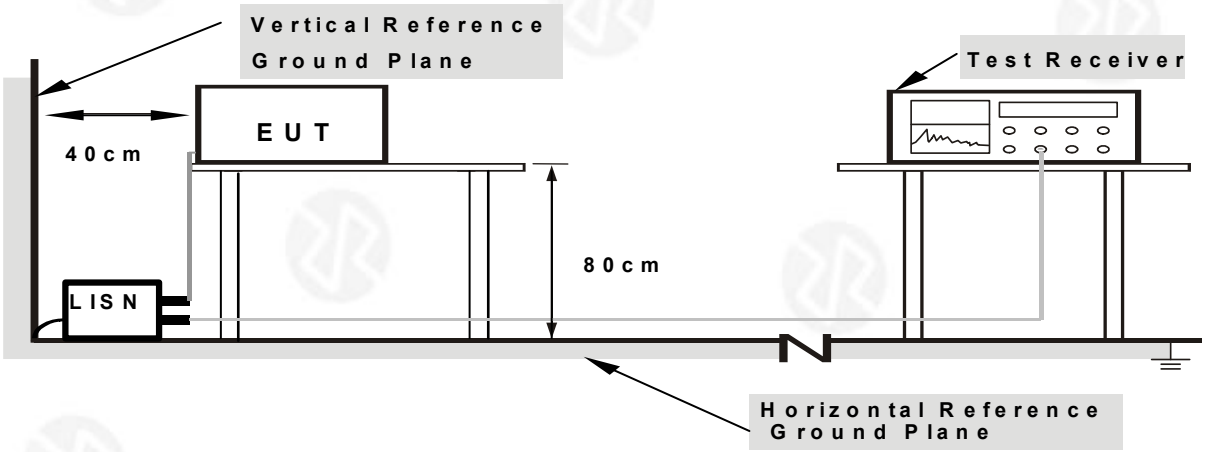

Note: 1.Support units were connected to second LISN.
2.Both of LISNs (AMN) are 80 cm from EUT and at least 80 from other units and other metal planes

4.1.5 EUT OPERATING CONDITIONS

The EUT was configured for testing in a typical fashion (as a customer would normally use it). The EUT has been programmed to continuously transmit during test. This operating condition was tested and used to collect the included data.

4.1.6 TEST RESULTS

The EUT is powered by the DC only, the test item is not applicable.

4.2 RADIATED EMISSION MEASUREMENT

Test Requirement:	FCC Part15 C Section 15.209
Test Method:	ANSI C63.10:2013
Test Frequency Range:	9kHz to 25GHz
Test site:	Measurement Distance: 3m
Receiver setup:	

Frequency	Detector	RBW	VBW	Value
9KHz-150KHz	Quasi-peak	200Hz	600Hz	Quasi-peak
150KHz-30MHz	Quasi-peak	9KHz	30KHz	Quasi-peak
30MHz-1GHz	Quasi-peak	100KHz	300KHz	Quasi-peak
Above 1GHz	Peak	1MHz	3MHz	Peak
	Peak	1MHz	10Hz	Average

4.2.1 RADIATED EMISSION LIMITS

20dBc in any 100 kHz bandwidth outside the operating frequency band. In case the emission fall within the restricted band specified on 15.205(a), then the 15.231(b) limit in the table below has to be followed.

Frequencies(MHz)	Field Strength(micorvolts/meter)	Measurement Distance(meters)
0.009~0.490	2400/F(KHz)	300
0.490~1.705	24000/F(KHz)	30
1.705~30.0	30	30
30~88	100	3
88~216	150	3
216~960	200	3
Above 960	500	3

LIMITS OF RADIATED EMISSION MEASUREMENT

FREQUENCY (MHz)	Limit (dBuV/m) (at 3M)	
	PEAK	AVERAGE
Above 1000	74	54

Notes:

(1) The limit for radiated test was performed according to FCC PART 15C.

(2) The tighter limit applies at the band edges.

(3) Emission level (dBuV/m)=20log Emission level (uV/m).

FUNDAMENTAL AND HARMONICS EMISSION LIMITS

Fundamental Frequency (MHz)	Field Strength of Fundamental (microvolts/meter)	Field Strength of Spurious Emissions (microvolts/meter)
40.66 - 40.70	2,250	225
70 - 130	1,250	125
130 - 174	1,250 to 3,750 **	125 to 375 **
174 - 260	3,750	375
260 - 470	3,750 to 12,500 **	375 to 1,250 **
Above 470	12,500	1,250

** linear interpolations

[Where F is the frequency in MHz, the formulas for calculating the maximum permitted fundamental field strengths are as follows: for the band 130-174 MHz, μV/m at 3 meters = 56.81818(F) - 6136.3636; for the band 260-470 MHz, μV/m at 3 meters = 41.6667(F) - 7083.3333. The maximum permitted unwanted emission level is 20 dB below the maximum permitted fundamental level.]

FREQUENCY RANGE OF RADIATED MEASUREMENT (For unintentional radiators)

Highest frequency generated or Upper frequency of measurement used in the device or on which the device operates or tunes (MHz)	Range (MHz)
Below 1.705	30
1.705 – 108	1000
108 – 500	2000
500 – 1000	5000
Above 1000	5th harmonic of the highest frequency or 40 GHz, whichever is lower

Spectrum Parameter	Setting
Attenuation	Auto
Start Frequency	1000 MHz
Stop Frequency	10th carrier harmonic
RBW / VBW setting	1 MHz / 1 MHz for Peak, 1 MHz / 10Hz for Average

Receiver Parameter	Setting
Attenuation	Auto
Start ~ Stop Frequency	9kHz~150kHz / RB 200Hz for QP
Start ~ Stop Frequency	150kHz~30MHz / RB 9kHz for QP
Start ~ Stop Frequency	30MHz~1000MHz / RB 120kHz for QP

4.2.2 TEST PROCEDURE

a. The measuring distance of at 3 m shall be used for measurements at frequency up to 1GHz. For frequencies above 1GHz, any suitable measuring distance may be used.
b. The EUT was placed on the top of a rotating table 0.8 meters above the ground at a 3 meter open area test site. The table was rotated 360 degrees to determine the position of the highest radiation.
c. The height of the equipment or of the substitution antenna shall be 0.8 m; above 1GHz, the height was 1.5m, the height of the test antenna shall vary between 1 m to 4 m. Both horizontal and vertical polarizations of the antenna are set to make the measurement.

d. The initial step in collecting conducted emission data is a spectrum analyzer peak detector mode pre-scanning the measurement frequency range. Significant peaks are then marked and then Quasi Peak detector mode re-measured.
e. If the Peak Mode measured value compliance with and lower than Quasi Peak Mode Limit, the EUT shall be deemed to meet QP Limits and then no additional QP Mode measurement performed.
f. For the actual test configuration, please refer to the related Item –EUT Test Photos.

Note:

Both horizontal and vertical antenna polarities were tested
and performed pretest to three orthogonal axis. The worst case was X axis and the emissions were reported

4.2.3 TEST SETUP

（A）Radiated Emission Test-Up Frequency Below 30MHz

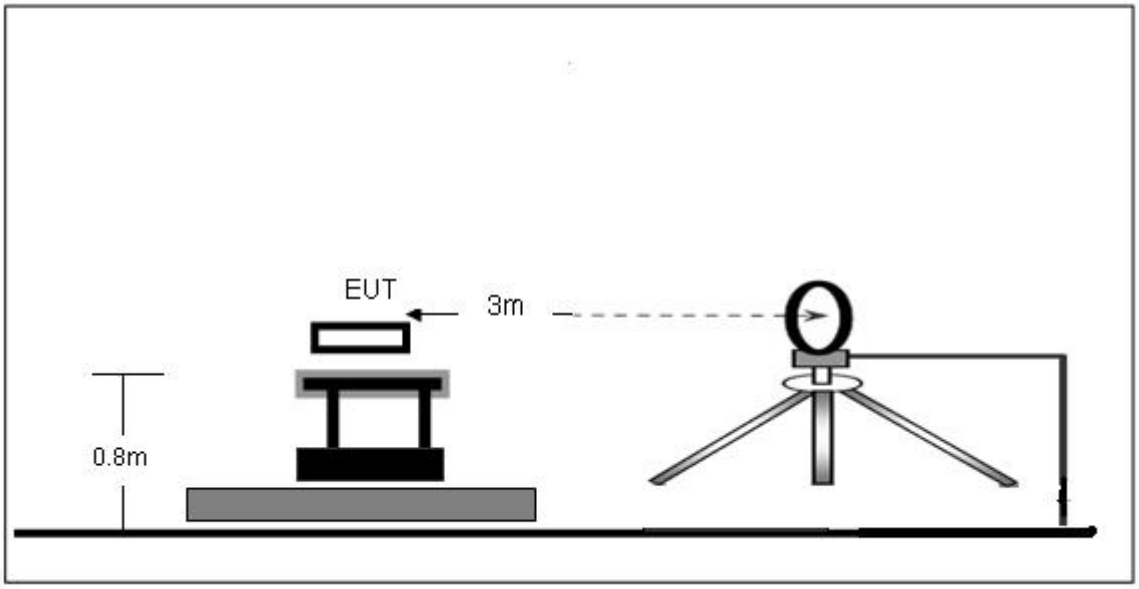

（B）Radiated Emission Test-Up Frequency 30MHz~1GHz

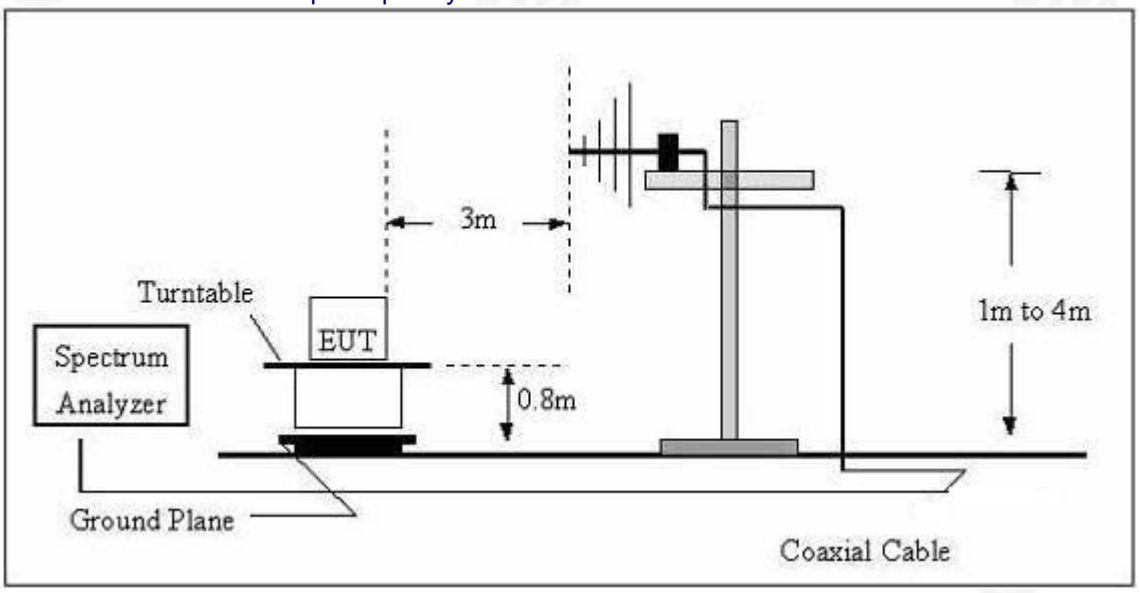

（C）Radiated Emission Test-Up Frequency Above 1GHz

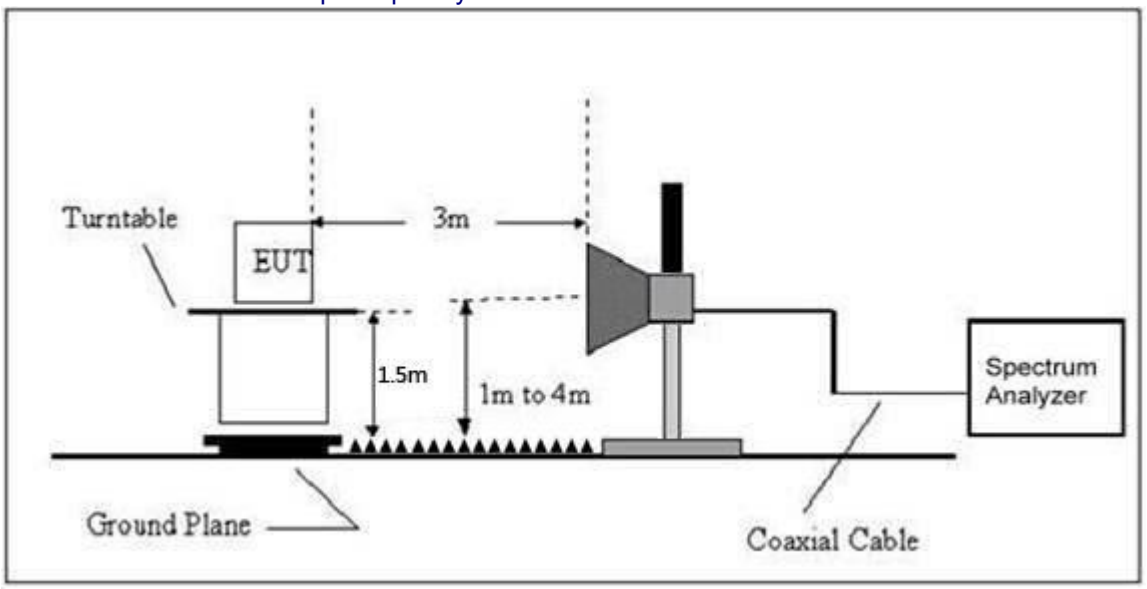

4.2.4 EUT OPERATING CONDITIONS

The EUT tested system was configured as the statements of 2.4 Unless otherwise a special operating condition is specified in the follows during the testing.

4.2.5 TEST RESULTS

Radiated Spurious Emission (Below 9KHz – 30MHz)

Temperature :	26 ℃	Relative Humidity :	54%
Pressure :	101 kPa	Polarization :	---
Test Voltage :	DC 3V		
Test Mode :	TX Mode		

Freq.	Reading	Limit	Margin	State
(MHz)	(dBuV/m)	(dBuV/m)	(dB)	P/F
--	--	--	--	PASS
--	--	--	--	PASS

NOTE:
The amplitude of spurious emissions which are attenuated by more than 20dB below the permissible value has no need to be reported.
Distance extrapolation factor =40 log (specific distance/test distance)(dB);
Limit line = specific limits(dBuv) + distance extrapolation factor.

Radiated Spurious Emission (Between 30MHz – 1GHz)

Temperature :	26 ℃	Relative Humidity :	54%
Pressure :	101 kPa	Polarization :	Horizontal
Test Voltage :	DC 3V		
Test Mode :	TX Mode		

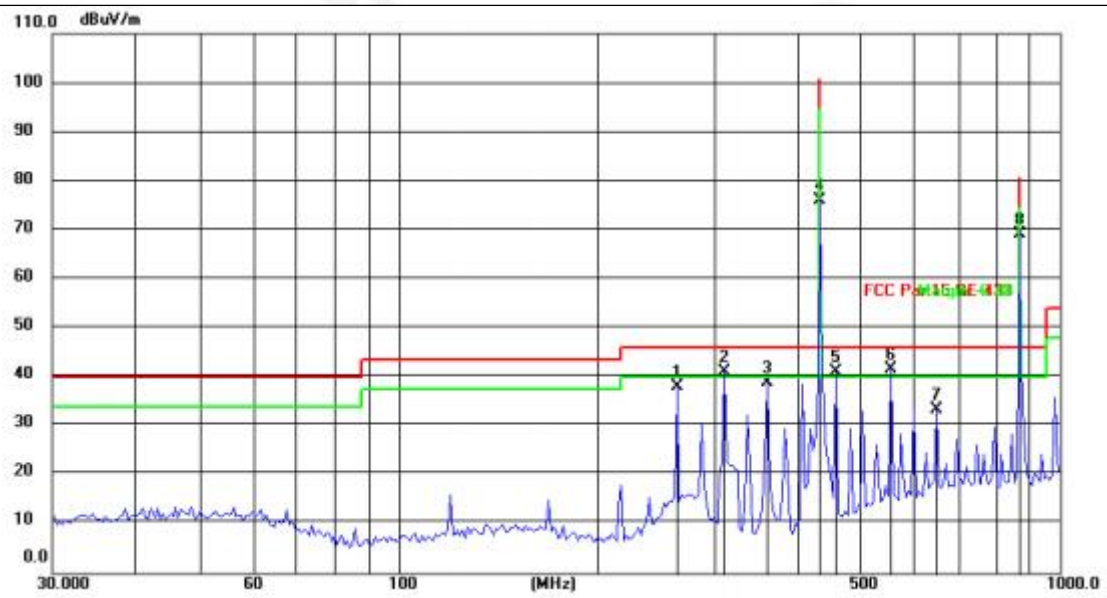

No.	Frequency (MHz)	Reading (dBuV)	Factor (dB/m)	Level (dBuV/m)	Limit (dBuV/m)	Margin (dB)	Detector
1	263.8190	55.14	-16.97	38.17	46.00	-7.83	QP
2	311.6324	60.04	-18.94	41.10	46.00	-4.90	QP
3	361.7137	57.68	-18.73	38.95	46.00	-7.05	QP
4	433.9200	92.91	-16.90	76.01	100.80	-24.79	peak
5	458.3100	56.74	-15.70	41.04	46.00	-4.96	QP
6	555.7990	53.70	-12.07	41.63	46.00	-4.37	QP
7	650.7997	43.22	-9.75	33.47	46.00	-12.53	QP
8	867.8400	78.23	-8.98	69.25	80.80	-11.55	peak

Remarks:
1.Final Level =Receiver Read level + Antenna Factor + Cable Loss – Preamplifier Factor
2.The emission levels of other frequencies are very lower than the limit and not show in test report.

Temperature :	26 ℃	Relative Humidity :	54%
Pressure :	101 kPa	Polarization :	Vertical
Test Voltage :	DC 3V		
Test Mode :	TX Mode		

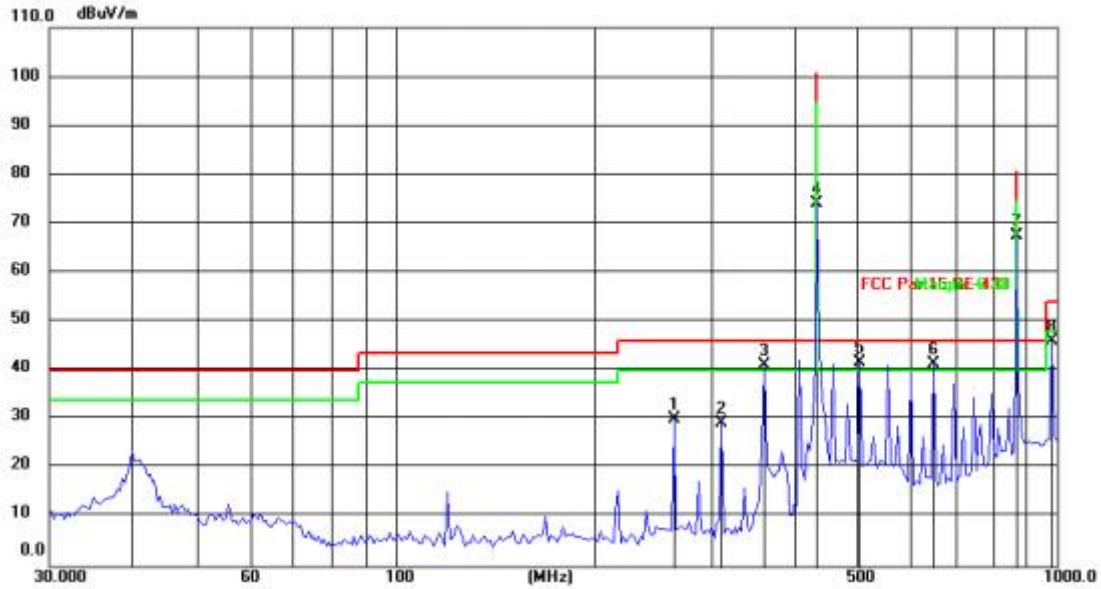

No.	Frequency (MHz)	Reading (dBuV)	Factor (dB/m)	Level (dBuV/m)	Limit (dBuV/m)	Margin (dB)	Detector
1	263.8190	51.38	-21.16	30.22	46.00	-15.78	QP
2	311.6325	49.21	-19.95	29.26	46.00	-16.74	QP
3	361.7137	59.51	-18.30	41.21	46.00	-4.79	QP
4	433.9200	90.02	-15.86	74.16	100.80	-26.64	peak
5	504.7062	55.06	-13.40	41.66	46.00	-4.34	QP
6	650.7997	51.10	-9.71	41.39	46.00	-4.61	QP
7	867.8400	71.17	-3.66	67.51	80.80	-13.29	peak
8	982.6200	48.34	-2.31	46.03	54.00	-7.97	QP

Remarks:
1.Final Level =Receiver Read level + Antenna Factor + Cable Loss – Preamplifier Factor
2.The emission levels of other frequencies are very lower than the limit and not show in test report.

For average Emission

Frequency MHz	Peak Level dBuV/m	Duty cycle factor	Average Level dBuV/m	Limit AV	Margin	Polarization
433.92	76.01	-8.473	67.537	80.8	-13.263	Horizontal
867.84	69.25	-8.473	60.777	60.8	-0.023	Horizontal

Notes: 1. Average emission Level = Peak Level + Duty cycle factor
2.Duty cycle level please see clause 5.

Frequency MHz	Peak Level dBuV/m	Duty cycle factor	AverageLevel dBuV/m	Limit AV	Margin	Polarization
433.92	74.16	-8.473	65.687	80.8	-15.11	Vertical
867.84	67.51	-8.473	59.037	60.8	-1.763	Vertical

Notes: 1. Average emission Level = Peak Level + Duty cycle factor
2. Duty cycle level please see clause 5.

Radiated Spurious Emission (1GHz to 10th harmonics)

Frequency MHz	Peak Level dBuV/m	Duty cycle factor	Average Level dBuV/m	Limit		Margin dB		Polarization
				PK	AV	PK	AV	
1301.72	51.69	-8.473	43.217	74.0	54.0	-22.31	-10.783	Vertical
1735.25	52.65	-8.473	44.177	80.8	60.8	-28.15	-16.623	Vertical
2603.55	50.82	-8.473	42.347	80.8	60.8	-29.98	-18.453	Vertical
3037.46	53.85	-8.473	45.377	80.8	60.8	-26.95	-15.423	Vertical
3471.35	51.22	-8.473	42.747	80.8	60.8	-29.58	-18.053	Vertical
3905.28	47.76	-8.473	39.287	74.0	54.0	-26.24	-14.713	Vertical
1301.72	47.34	-8.473	38.867	74.0	54.0	-26.66	-15.133	Horizontal
1735.25	47.21	-8.473	38.737	80.8	60.8	-33.59	-22.063	Horizontal
2603.55	49.84	-8.473	41.367	80.8	60.8	-30.96	-19.433	Horizontal
3037.46	49.16	-8.473	40.687	80.8	60.8	-31.64	-20.113	Horizontal
3471.35	47.28	-8.473	38.807	80.8	60.8	-33.52	-21.993	Horizontal
3905.28	48.39	-8.473	39.917	74.0	54.0	-25.61	-14.083	Horizontal

Notes: 1.Average emission Level = Peak Level + Duty cycle factor

2.Duty cycle level please see clause 6.

5. BANDWIDTH TEST

5.1 APPLIED PROCEDURES / LIMIT

According to FCC 15.231(c) requirement:

The bandwidth of the emission shall be no wider than 0.25% of the center frequency for devices operating between 70 MHz to 900 MHz. Those devices operating above 900 MHz, the emission spurious shall be no wider than 0.5% of the center frequency. Bandwidth is determined at the points 20 dB down from the modulated carrier.

B.W (20dBc) Limit = 0.25% * f(MHz) = 0.25% * 433.92MHz = 1.0848MHz

Spectrum Parameter	Setting
Attenuation	Auto
Span Frequency	> Measurement Bandwidth or Channel Separation
RB	30kHz
VB	≥RBW
Detector	Peak
Trace	Max Hold
Sweep Time	Auto

5.2 TEST PROCEDURE

a. The EUT was directly connected to the spectrum analyzer and antenna output port as show in the block diagram below,
b. Spectrum Setting : RBW= 30kHz, VBW≥ RBW, Sweep time = Auto.

5.3 DEVIATION FROM STANDARD

No deviation.

5.4 TEST SETUP

5.5 EUT OPERATION CONDITIONS

The EUT tested system was configured as the statements of 2.4 Unless otherwise a special operating condition is specified in the follows during the testing.

5.6 TEST RESULTS

Temperature：	26 ℃	Relative Humidity：	54%
Pressure：	101kPa	Test Voltage ：	DC 3V
Test Mode ：	TX Mode		

Frequency	20dB Bandwidth (kHz)	Limit (MHz)	Result
433.92MHz	78.44	1.0848	PASS

Mode 1

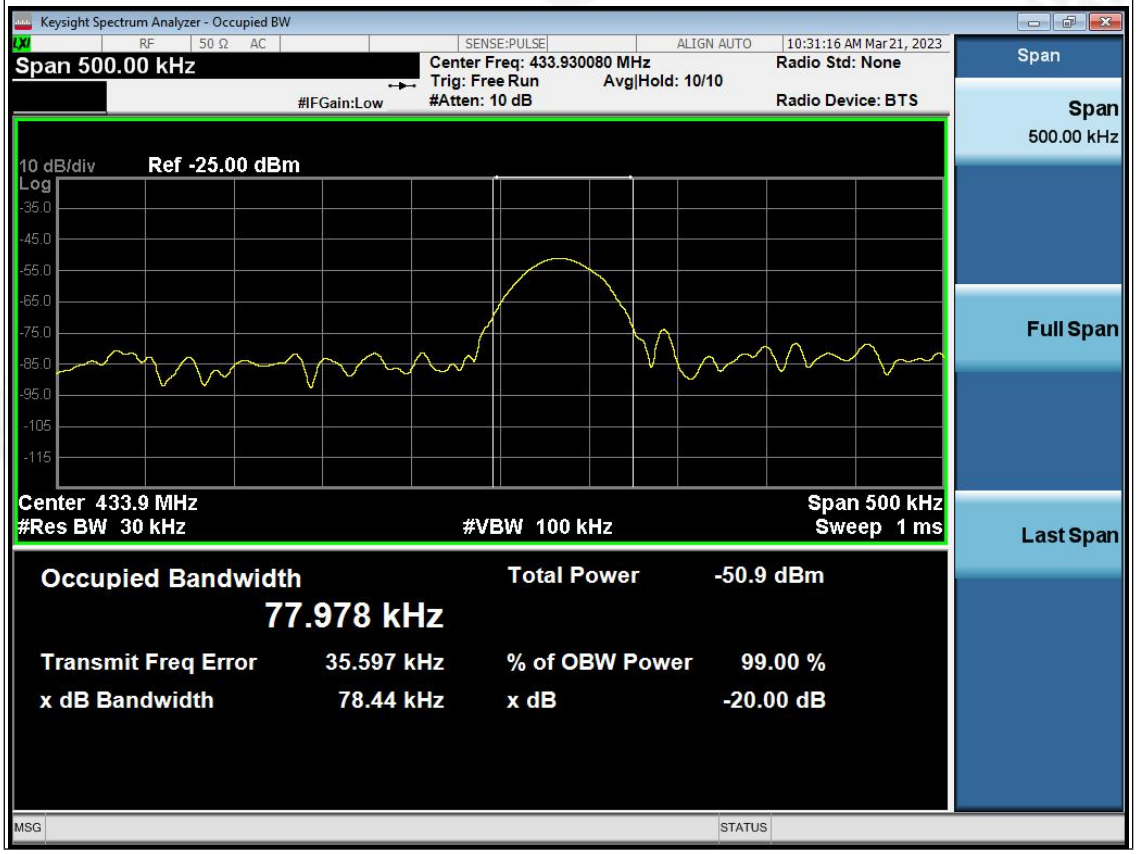

6. CALCULATION OF AVERAGE FACTOR

The output field strengths of specification in accordance with the FCC rules specify measurements with an average detector. During the test, a spectrum analyzer incorporating a peak detector was used. Therefore, a reduction factor can be applied to the resultant peak signal level and compared to the limit for measurement instrumentation incorporating an average detector.

The duty cycle is measured in 100 ms or the repetition cycle period, whichever is a shorter time frame. The duty cycle is measured by placing the spectrum analyzer to set zero span at 100kHz resolution bandwidth.

Averaging factor in dB =20log (duty cycle)

The duration of one cycle =51.28ms

The duty cycle is simply the on-time divided the duration of one cycle

Duty Cycle = (1.26ms*10+0.45ms*15)/ 51.28

=19.35ms /51.28ms

=0.377

Therefore, the averaging factor is found by 20log0.377= -8.473dB

Test plot as follows:

Note: During the 100ms, the amount of pulse and on-time of pulse are the same for every pulse train.

Cycle

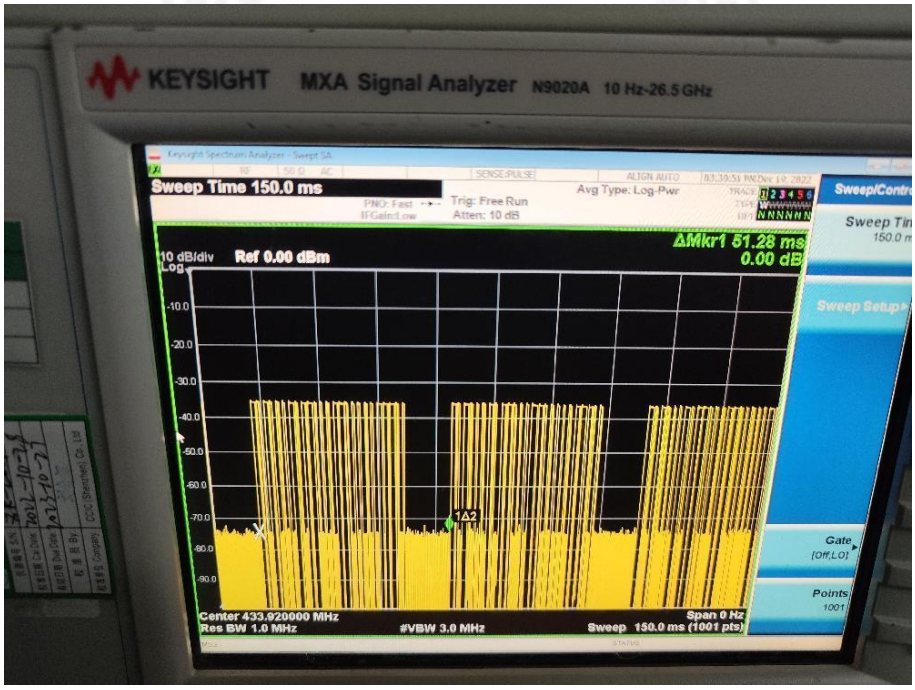

Pulse

On-time

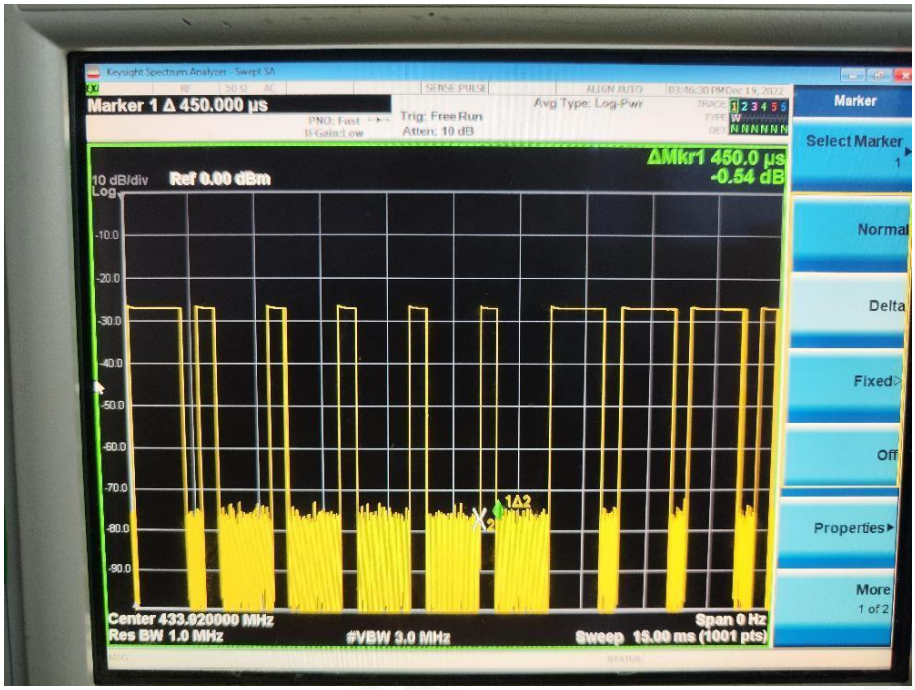

Keysight Spectrum Analyzer - Swept SA
Marker 1 Δ 1.26000 ms
PNO: Fast
IFGain:Low
Trig: Free Run
Atten: 10 dB
Avg Type: Log-Pwr
ΔMkr1 1.260 ms
0.01 dB
10 dB/div
Ref 0.00 dBm
Log
-10.0
-20.0
-30.0
-40.0
-50.0
-60.0
-70.0
-80.0
-90.0
1Δ2
Center 433.920000 MHz
Res BW 1.0 MHz
#VBW 3.0 MHz
Span 0 Hz
Sweep 15.00 ms (1001 pts)
Marker
Select Marker
Normal
Delta
Fixed
Off
Properties
More
1 of 2

7. DWELL TIME

7.1 APPLICABLE STANDARD

According to FCC 15.231(a) requirement:

A manually operated transmitter shall employ a switch that will automatically deactivate the transmitter within not more than 5 seconds of being released.

7.2 TEST PROCEDURE

Check the calibration of the measuring instrument using either an internal calibrator or a known signal from an external generator.

1.Position the EUT without connection to measurement instrument. Turn on the EUT and connect its antenna terminal to measurement instrument via a low loss cable. Then set it to any one measured frequency within its operating range, and make sure the instrument is operated in its linear range.

2.Set RBW to 100 kHz and VBW of spectrum analyzer to 300 kHz with a convenient frequency span including 100 kHz bandwidth from band edge.

3.Measure the highest amplitude appearing on spectral display and set it as a reference level. Plot the graph with marking the highest point and edge frequency.

4.Repeat above procedures until all measured frequencies were complete.

7.3 DEVIATION FROM STANDARD

No deviation.

7.4 TEST SETUP

7.5 EUT OPERATION CONDITIONS

The EUT tested system was configured as the statements of 2.4 Unless otherwise a special operating condition is specified in the follows during the testing.

7.6 TEST RESULTS

Dwell time (second)	Limit (second)	Result
480ms	<5s	Pass

Test plot as follows:

8. ANTENNA REQUIREMENT

Standard requirement:	FCC Part15 C Section 15.203
15.203 requirement: An intentional radiator shall be designed to ensure that no antenna other than that furnished by the responsible party shall be used with the device. The use of a permanently attached antenna or of an antenna that uses a unique coupling to the intentional radiator, the manufacturer may design the unit so that a broken antenna can be replaced by the user, but the use of a standard antenna jack or electrical connector is prohibited.	
EUT Antenna:	
The antenna is PCB Antenna, the best case gain of the antennas are -2.12dBi, reference to the appendix II for details	

9. TEST SETUP PHOTO

Reference to the appendix I for details.

10. EUT CONSTRUCTIONAL DETAILS

Reference to the appendix II for details.

※※※※※ END OF REPORT ※※※※※