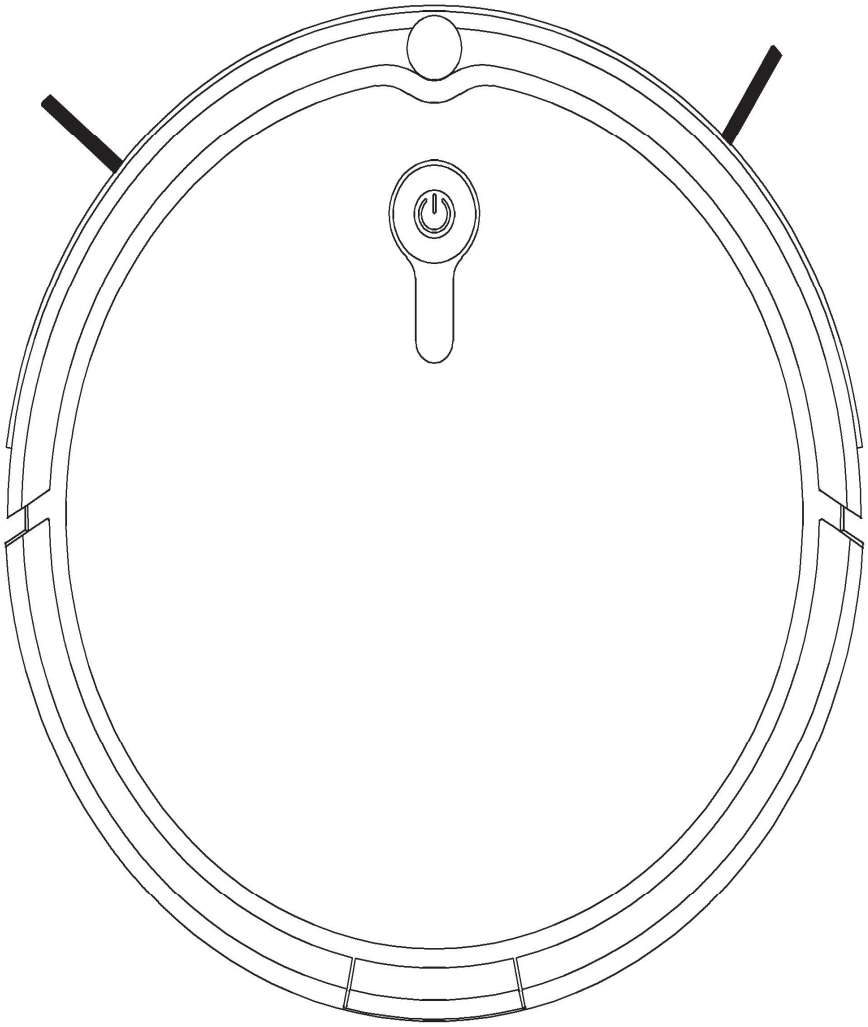

S1-340
S1-340A

Smart Sweeping Robot
Product Manual

Table of Contents

1 Important Safety Instructions....1
2 Product Components....2
2.1 The main machine and accessories....2
2.2 The main machine....3
2.3 Charging station....3
2.4 Dustbin....4
2.5 Water tank....4
2.6 Side brush....4
2.7 Remote control....4
3 Product Operations....6
3.1 Quick start guide....6
3.2 Start/Pause/Standby mode....7
3.3 Plan mode....7
3.4 Cleaning mode....8
3.5 Water tank and mop operation....9
4 Product Maintenances....11
4.1 Cleaning of side brush....11
4.2 Cleaning of dustbin and filter....11
4.3 Cleaning of sensors and charging poles....12
4.4 Cleaning of main brush....12
4.5 Water tank maintenance....13
4.6 Battery replacement....13
5 Troubles Shooting....14
6 Product Parameters....15

1 Important Safety Instructions

This appliance can be used by children aged from 8 years and above and persons with reduced physical, sensory or mental capabilities or lack of experience and knowledge if they have been given supervision or instruction concerning use of the appliance in a safe way and understand the hazards involved. Children shall not play with the appliance. Cleaning and user maintenance shall not be made by children without supervision.

WARNING: For the purposes of recharging the battery, only use the detachable supply unit provided with this appliance.

detachable supply unit

The appliance is only to be used with the power supply unit provided with the appliance.
Main switch must be OFF before cleaning or maintaining the appliance.

1. Non-rechargeable batteries are not to be recharged in Remote control
2. different types of batteries or new and used batteries are not to be mixed in Remote control
3. batteries are to be inserted with the correct polarity into Remote control
4. Exhausted batteries are to be removed from the Remote control and safely disposed of.
5. if the Remote control is to be stored unused for a long period, the batteries should be removed
6. The battery of main machine is only replaceable by skilled persons.

For adaptorWarning
- The outlet should be close to the device and be slightly accessible.
- Use the device NOT with a damaged connecting cable or case.
- Follow the technical data given by the manufacturer if you use the device.
- Pull out the plug of the outlet if the device is not used.
- Max. Ambient temperature 40 °C.
- for indoor use only.
- The mains connection management of this device cannot be substituted. By damage of the power cable the device has to be thrown away.
- The device may not be put out to splashing water, rain or humidity.
- Objects with liquids, e.g. vases, should not be put on the device.
- If there is any damage on the external flexible cord of the adapter, the adaptor should be scrapped.

Hereby, Sinsion Technology Industrial Co., Ltd., declares that this Smart Sweeping Robot is in compliancewith the essential requirements and other relevant provisions of RE Directive 2014/53/EU.

2 Product Components

2.1 The main machine and accessories

No.	Name	Quantity
1	Main machine	1pc
2	Charging station	1pc
3	Remote control	1pc
4	Adapter	1pc
5	Cleaning brush	1pc
6	Insturction manual	1pc
7	Side brush	2pcs
8	Water tank	1pc

Attention:

Please take actual product shall prevail on the basis of not less than the above accessories.

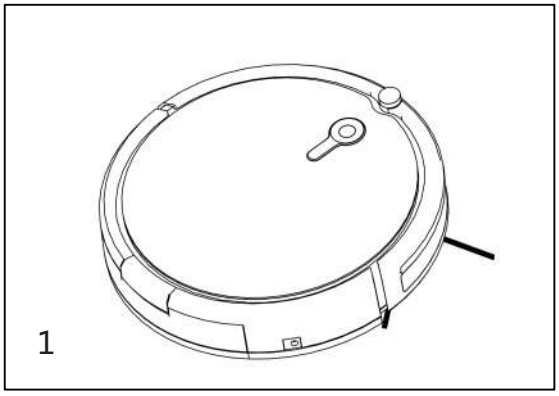

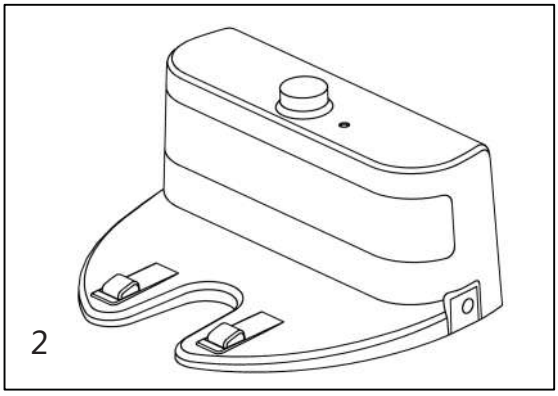

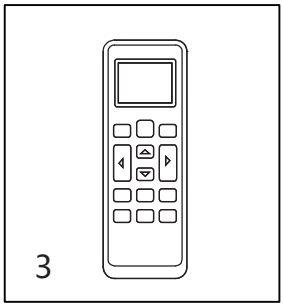

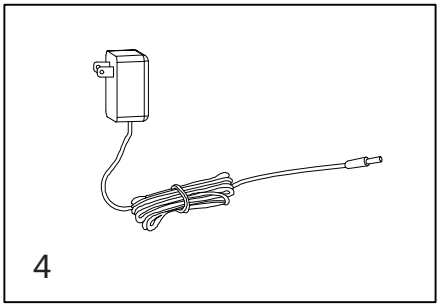

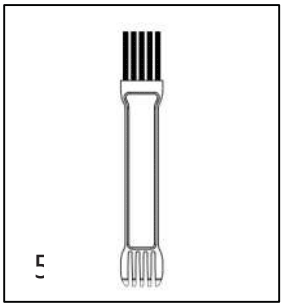

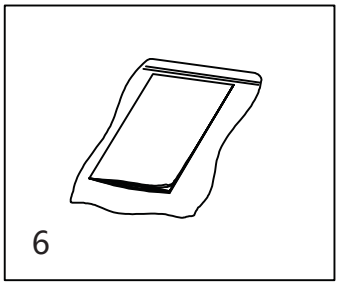

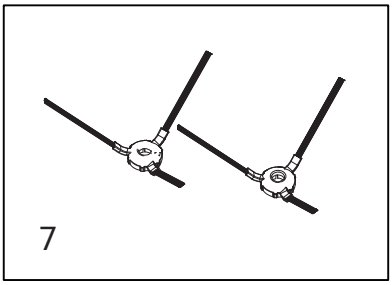

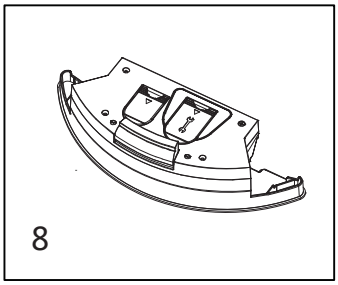

2 Product Components

2.2 Main machine

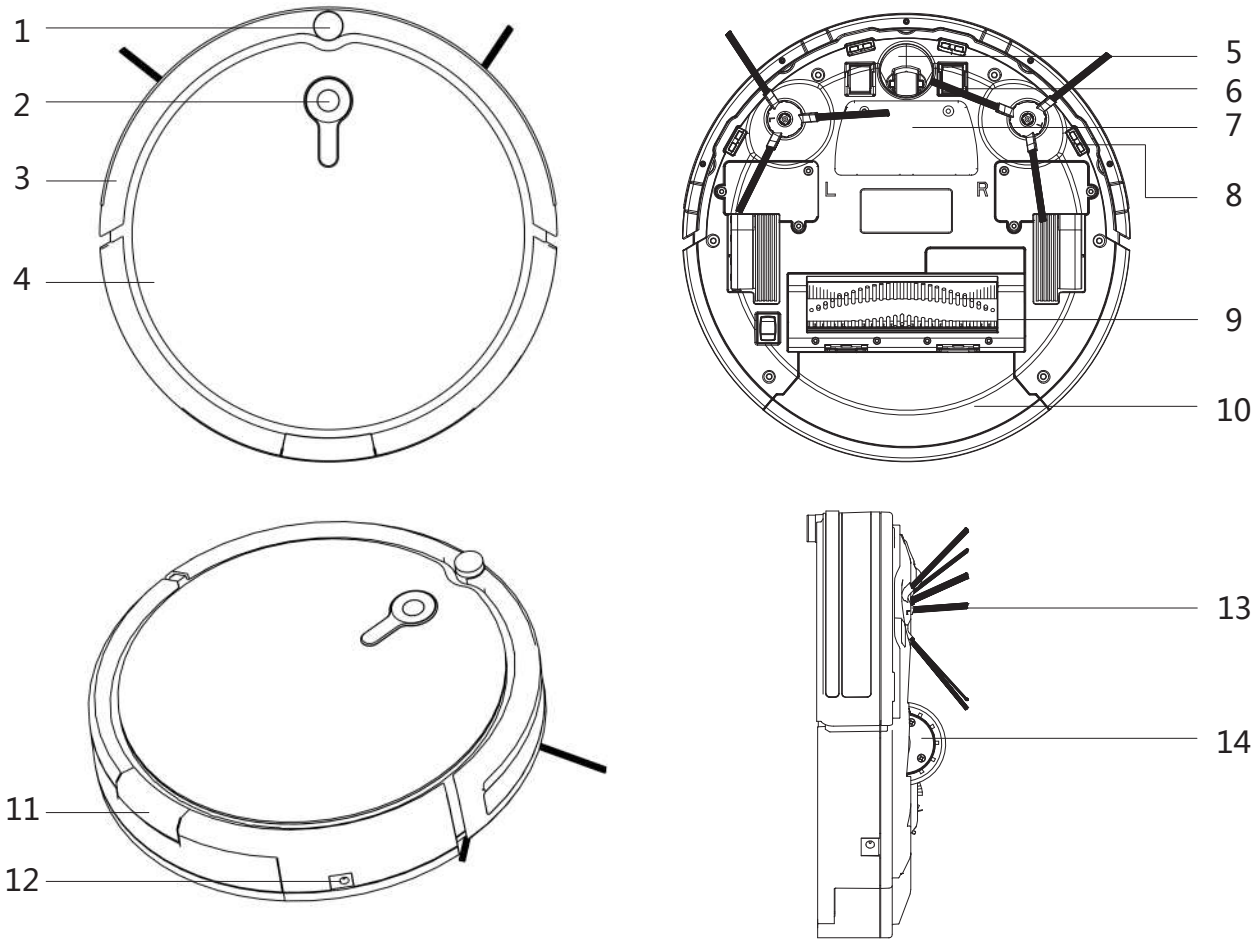

1. Signal receiving sensor	6. Charging poles	11.Dustbin cover button
2. Mechanical clean button	7. Battery cover	12.Charging socket
3. Bumper	8. Stair detection sensor	13. Side brush
4. Panel	9. Main brush	14. Drving wheel
5. Universal wheel	10. Dustbin	

2.3 Charging station

1.Signal receiver
2.Signal projector
3.Charging poles
4.Indication light
5. Adapter socket

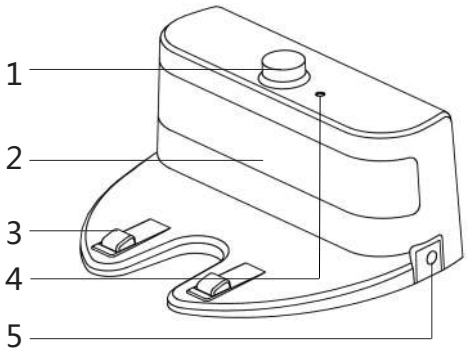

2 Product Components

2.4 Dustbin

1.Primary filter
2.High efficency filter
3.Dusbin upper cover
4. Dusbin botton cover

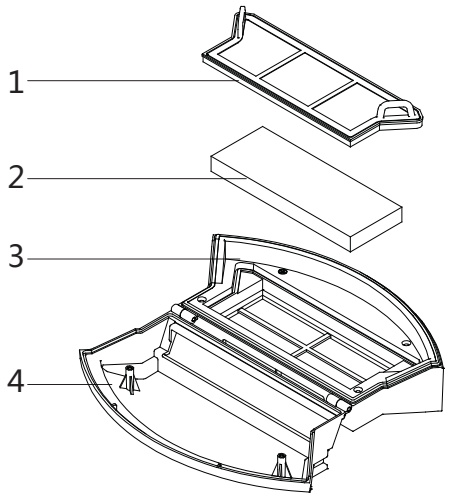

2.5 Water tank

1. Water tank button
2. Water inlet cap
3.Air valves
4. Water leakage hole
5. Mop

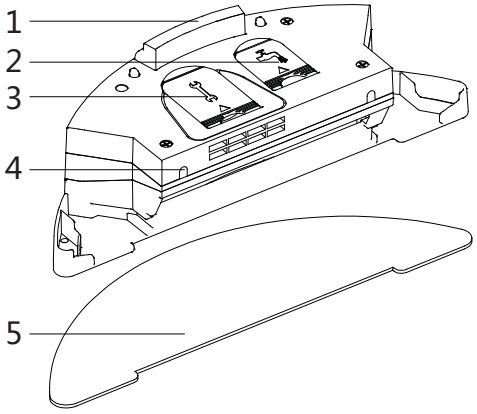

2.6 Side brush

Please install the side brush according to the "L" and "R" marks on the side brush, corresponding to the "L" and "R" of the side brush position on the bottom of the machine.

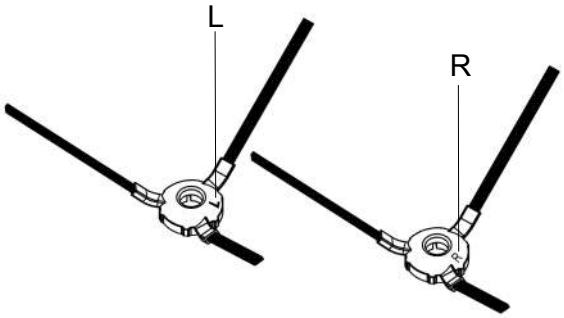

2.7 Remote control

1

The robot is in standby or cleaning mode, press this button to start auto recharging.

2

1 Press this button to change standby mode from sleep mode (power switch is on).
2 In standby mode, press this button to start cleaning.

2 Product Components

3 In cleaning mode, press this button to stop cleaning.
4 In plan mode, press this button to confirm the schedule setting.
5 Press this button to start cleaning when the robot is recharging on charging station.

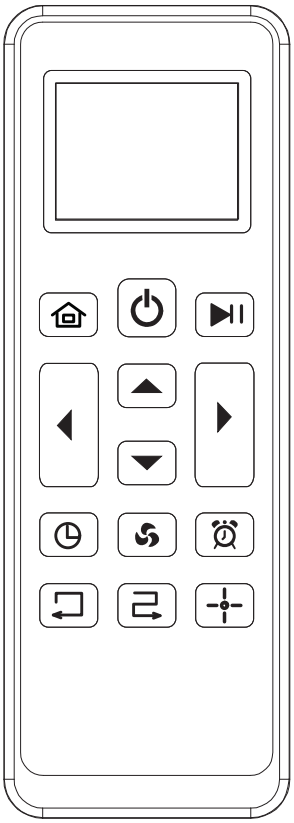

3 ▶II

Press this button to start random cleaning mode. The process is zigzag cleaning mode, fixed cleaning mode, and cleaning mode in edgewise.

4 ▲ ▼ ◀ ▶

Press direction button to adjust the robot moving direction.

5

Press this button for 3 seconds to start time setting, press again to confirm time setting.

6

In cleaning mode press this button to start strong suction power cleaning.

7

Long press this button to start schedule setting, press On/Off button to confirm setting. In the process of setting, press schedule button to unset. (Before reschedule cleaning, set current clock time to confirm that the remote control aims at the machine).

8

In standby or cleaning mode, press this button to start edgewise cleaning mode.

9

In standby or cleaning mode, press this button to start advanced zigzag cleaning mode.

10

In standby or cleaning mode, press this button to start spot cleaning mode. The robot start Zigzag cleaning mode automatically after spot cleaning finished.

Attention:

1 Please install 2 AAA/R03(No.7) battery.
2 Please take out battery when you do not use for a long time.
3 Remote control will be in standby mode in a few seconds after use, please press any key to wake up it.

3 Product operations

3.1 Quick start guide

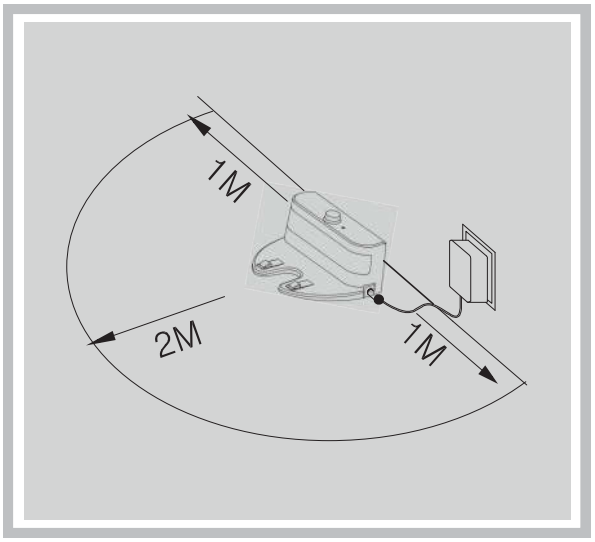

1.Place charge

Place charger, connect the adapter and power, and the power light on the charger will stay lit. Position the charger against the wall, and remove all obstacles about 1 or 2 meters ahead of the charger.

2. Power Switch

Open the power switch at the bottom of the machine, host keypad led is lit, the machine enters standby mode..

3. Main machine sweep button

Turn on the power switch of the product, and press directly the sweep button on the panel, it will begin with a zigzag path cleaning.

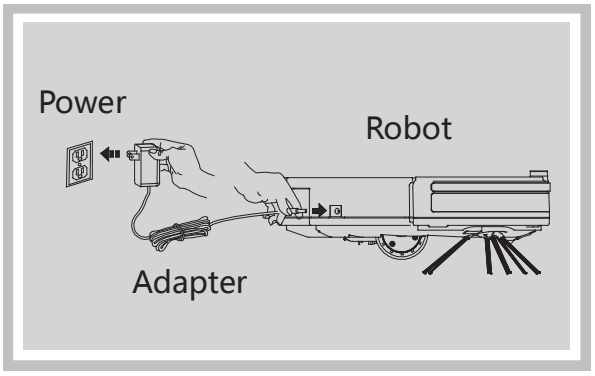

4.Product charging

There are two methods of charging.

1 Plug the power adapter directly to the machine and the other end is plugged in the power.

2 When the charge is lower than 20%, the machine will automatically start looking for recharge stand, or press the recharge button on the remote control to return the automatic charger. Automatic recharge-sensing distance as in the charging a RADIUS 4m, please ensure that the charger is powered and obstacle location as little as possible, otherwise it could not find the charger.

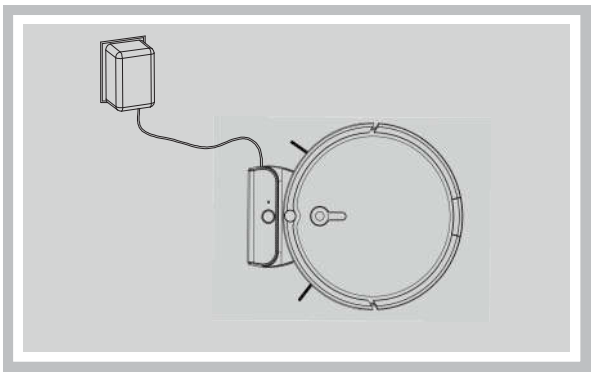

Attention:

1 When charging, make sure the power switch is on.

2 using the charger stand will interrupt the charging and start the cleaning, so please do not make this operation when using thedirect charge.

3 Product operations

3 Charging the machine 6 hours for the first time.

4 When charging, the cleaning button blinks, and when fully charged, the cleaning button stops blinking, and lit permanently.

5 Please switch the main machine off when long time no use.

3.2 Pause/Standby mode

1. This model operation process: sleep mode>Standby mode>Cleaning mode

1 Sleep mode: power switch is on, CLEAN button light is off, the robot does not work.

2 Standby mode: power switch is on, CLEAN button light is on, the robot does not work.

3 Cleaning mode: the robot is cleaning, CLEAN button light is off.

2.Start

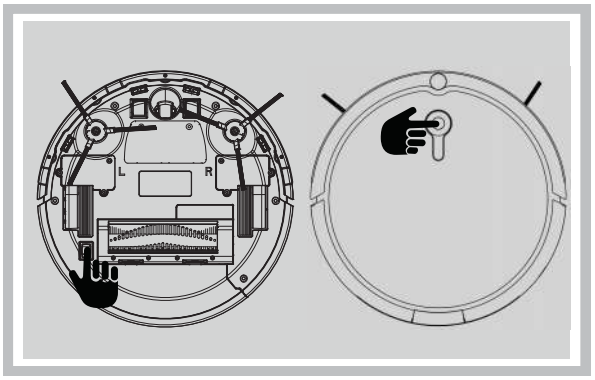

1 Please turn on the switch at the bottom of the machine.

2 Press sweep button on the machine or on the remote control to automatically start the machine to work.

Attention:

When the robot is in sleep mode, press CLEAN button on the main machine to wake it up, press again to start cleaning.

3.Standby mode

Standby mode refers to the machine switching from working status to static status. Press the sweep button on the machine or switch button on the remote control to operate.

4.Sleep mode

In standby mode without any operation the machine will enter into standby mode after 2 minutes, and the machine is in static status and the button indicator light is off.

3.3 Plan mode

Under the plan mode, the machine can work at a preset time.

1.Set the remote controller clock time

1 Long press the clock button in the remote controller for 3 seconds, and set a specific time according to “up, down, left and right” direction button.

2 Press the clock button once again to save the setting.

2.Set the pre-scheduled cleaning time

1 Point the remote controller at the machine (the machine is in standby status).

3 Product operations

2 Long press the “plan” button in the remote controller for 3 seconds into the plan mode, and set a specific time according to “up, down, left and right” direction button.
3 Press the on/off button to save the settings, and to cancel the plan, press the “plan” button again (During the operation, the machine is always on the standby status.)

Attention:

1 Set clock for your remote control before cleaning, the time settings are using real time.
2 Replace the remote control batteries, reset the appointment.
3 This machine uses real time for an appointment. If power is off, you will need to make an appointment.
4 Make an appointment for each half hour, clock settings are in minutes.

3.4 Clean mode

1.Automatic clean

1 Press the clean button on the machine directly into the zigzag cleaning mode, if not switching, the operating mode remains unchanged.
2 Press automatic button on the remote controller for random cleaning, and the process is the zigzag cleaning mode, fixed cleaning mode and edgewise cleaning model.

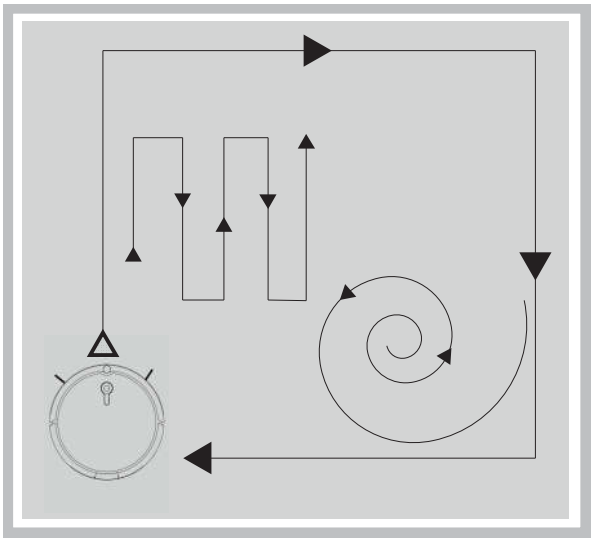

Attention:

Machine in any cleaning mode, press the remote control "on/off" button or sweep button on the machine to stop working.

2.Spot cleaning

1 Place machine in clean area, press the remote control's "SPOT " button on the machine to start with the placement point spiral sweep.

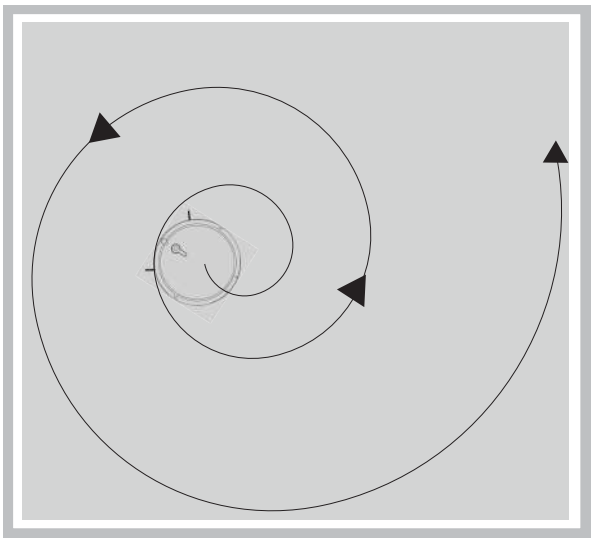

Attention:

2 After the spot cleaning is completed, the machine will automatically enter zigzag cleaning mode.
3 Remote control on the machine’s instructions is required to point at the machine in order to operate successfully.

3 Product operations

3.Edge cleaning

1 Press edge cleaning button on remote control to start edge cleaning mode, the robot will start edge cleaning.
2 In auto cleaning mode, the robot also may start edge cleaning.

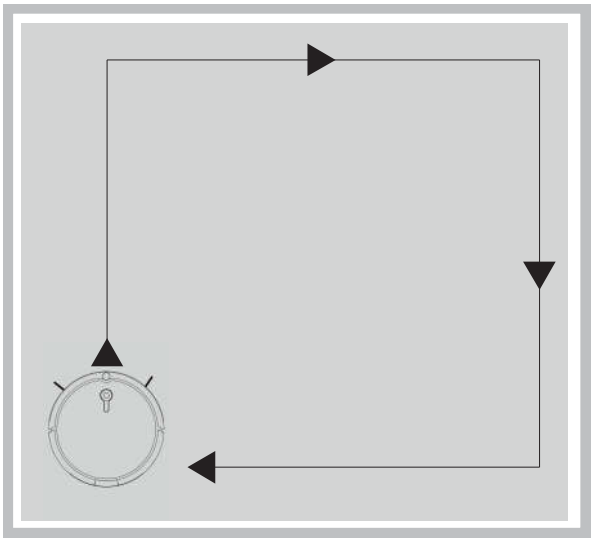

4.Advanced zigzag cleaning

Press zigzag cleaning button on remote control to start advanced zigzag cleaning.

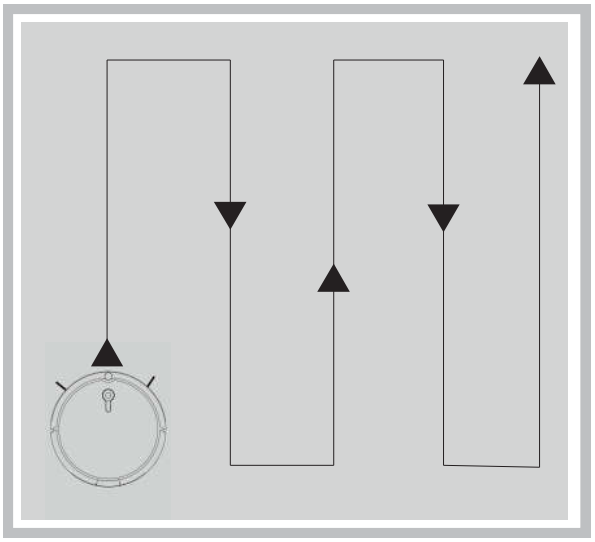

Attention:

In any mode, press this button to start strong suction power cleaning.

3.5 Water tank and mop operation

1.Filling water into water tank

1 Open water inlet cap.
2 Fill in water and cover the cap. Water tank capacity is 260ml(appr.).
3 Check whether the tank bottom outlet wool column drops (not drops is normal).
4 After the check, MOP stick firmly on the water bottom, put the blue Flannel into the machine facing the ground.
5 Put the tank into the machine, start the machine, and water enters into the mop through wool column, water stopped dripping out of the tank when the machine stops. Pour water out if the machine stops working for a long time.

3 Product operations

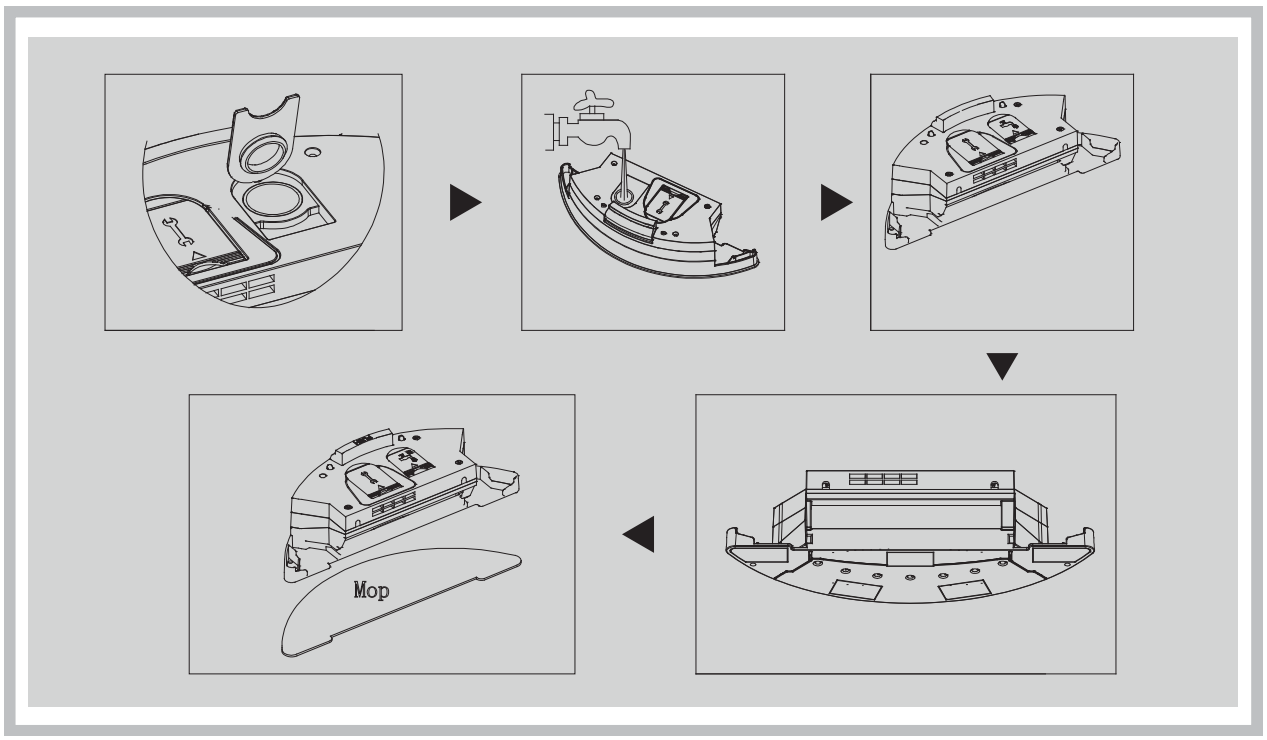

2 Installation of water tank

MOP chassis is mounted on the machine, and when installed, please aim at the tanks fixed jacks.

Attention

1 Please remove the water tank when injecting water, and do not inject with complete machine.
2 Please remove water drops when installation of water tank.
3 Mop shall not be too wet, and wring to prevent tire slippage.

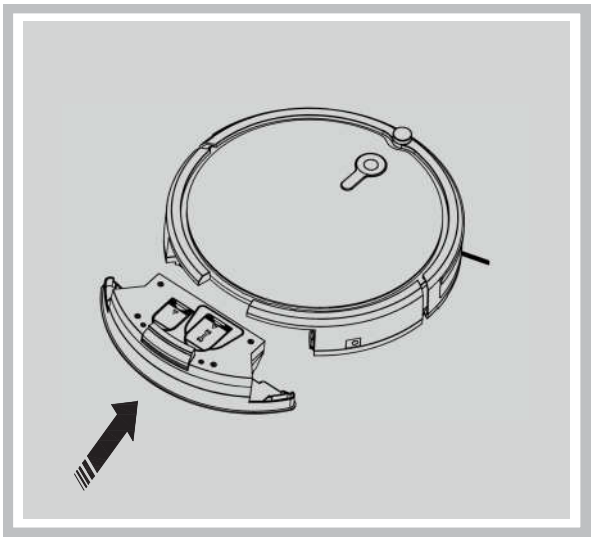

4 Product Maintenances

4.1 Cleaning of side brush

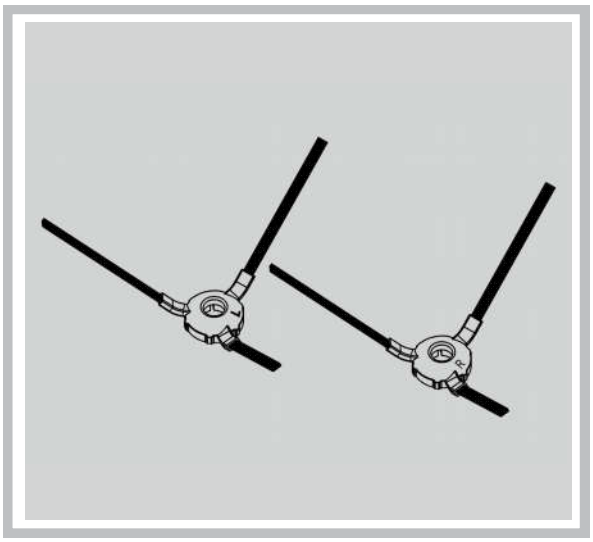

Side brush can be removed and clean by water. Please dry them completely before second use. If side brushes damaged, please replace them.

Attention:

When replace side brush, please pay attention to the L and R position and color.

4.2 Cleaning of dustbin and filter

1 Press PUSH button on dustbin, remove the dustbin.
2 Open dustbin bottom cover.
3 Hold primary filter and pull out, then pull out high efficiency filter.
4 Pour out trash into trash bin.
5 Clean dustbin, high efficiency filter and primary filter completely. High efficiency filter lifetime is 6 months.
6 Please install them correctly before second use.

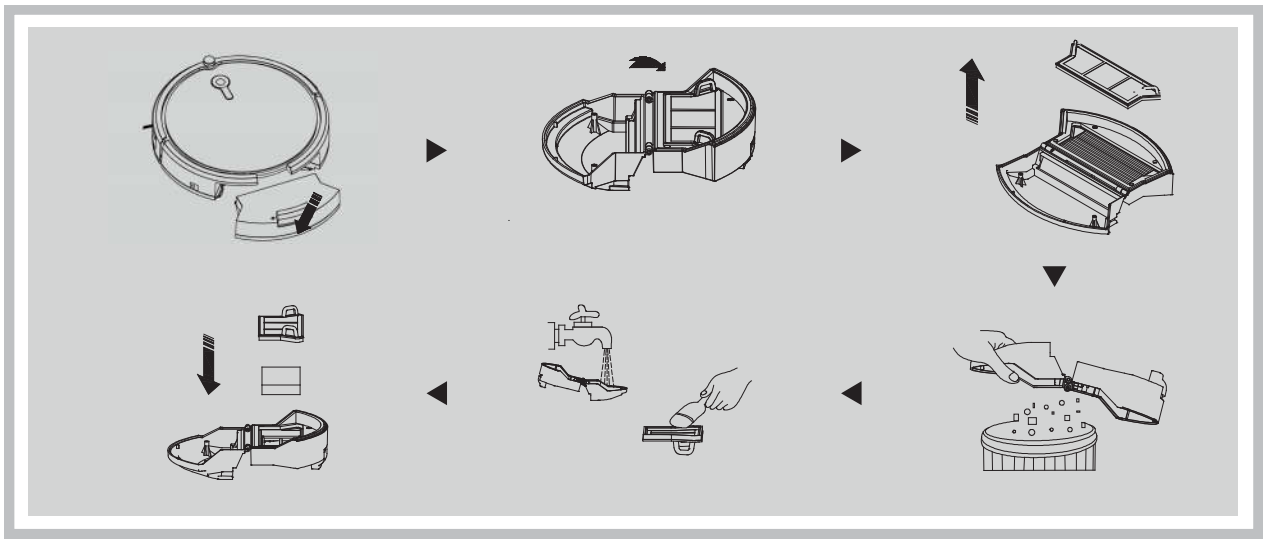

Attention

1 Please clean the dustbin after each use.
2 Parts washed by water, do not expose to sun. Please install them after drying completely.
3 Please do not use the robot when primary filter and high efficiency filter are damaged to avoid motor damage. Please replace new filters before use.
4 High efficiency filter cannot be washed by water.

4 Product Maintenances

4.3 Cleaning of sensors and charging poles

1 Clean sensors and charging poles on robot bottom by using soft cloth.

2 Clean charging poles on charging station by using soft cloth.

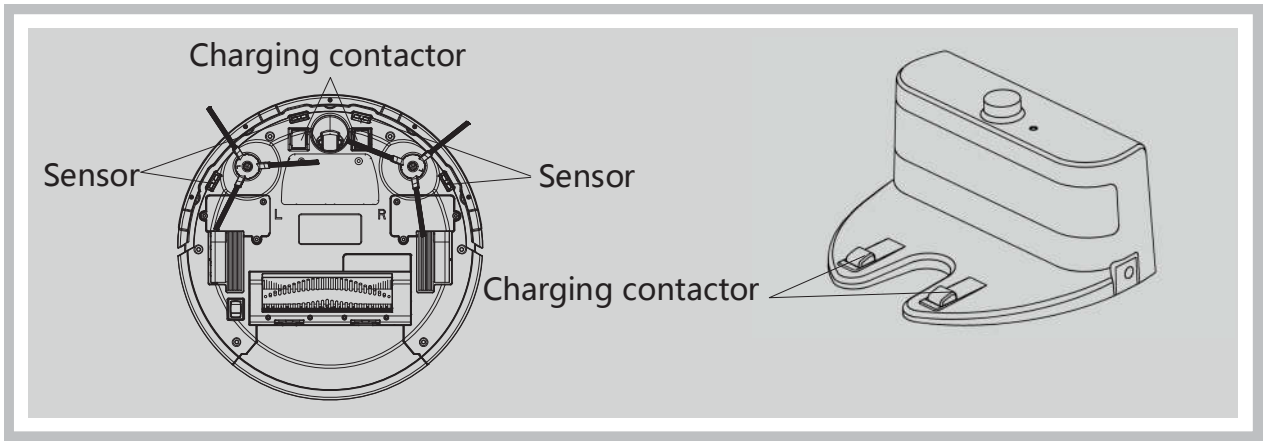

4.4 Cleaning of main brush

1 Press the locker, open main brush cover.

2 Hold one end of main brush, take out. Install another end of main brush first when installation after cleaning.

3 Clean the hair and dirt by using a cleaning brush. Please make sure that do not lose the rubber.

4 Install the main brush and cover after cleaning.

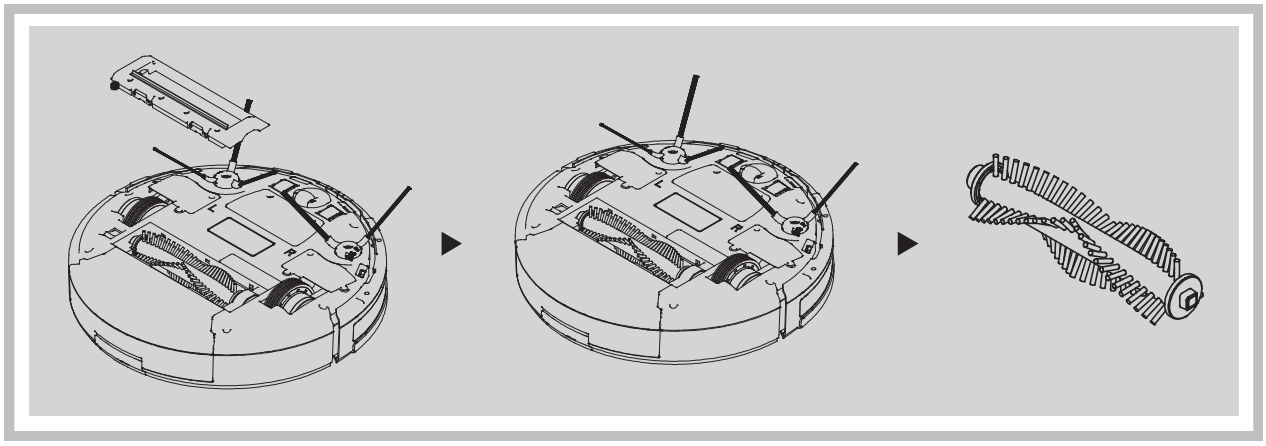

Attention

All maintenance must be done after dustbin removed.

4 Product Maintenances

4.5 Water tank maintenance

1 When the mop need to be cleaned, remove the mop first, clean dirt first then wash by water.
2 Air valve do not need to be maintained when normal use. Clean it when water leakage is abnormal (the power switch is off).
3 Take out air valve components, check and clean, then install correctly.
Attention: Air valve components include: air valve frame air valve(rubber).
Do not miss or damage when maintenance.

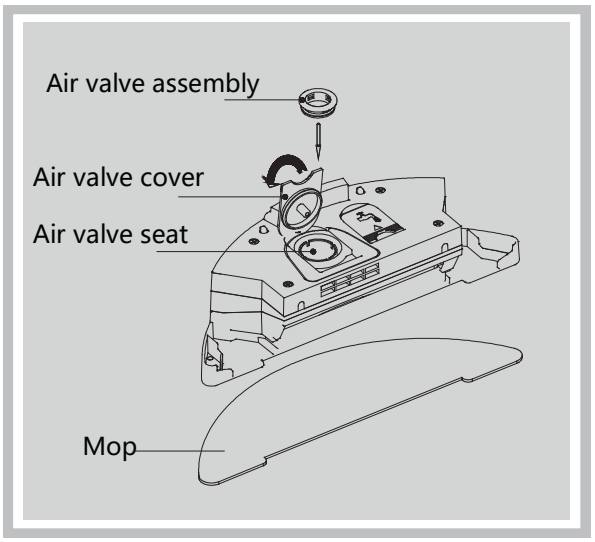

4.6 Battery replacement

1 This appliance contains batteries that are only replaceable by skilled persons.
2 Open the battery cover by using a screw driver.
3 Hold the insulation cloth and pull out the battery.
4 Detach the battery from the main machine.
5 Install new battery. Make sure the side with words up.
6 Connect the battery with main machine.
7 Lock the battery cover.
8 Turn on the robot to check.

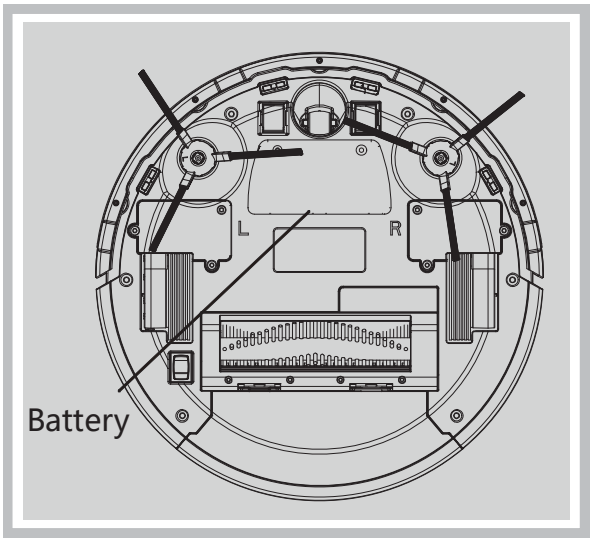

Attention:

1 Do not use unapproved battery to avoid damage.
2 Please charge for 6 hour after new battery changed.
3 Keep the old battery for recycling.

5 Trouble shooting

No.	Problems	Solution
1	The robot keeps moving backwards	1 Avoid working in high light intensity environments. 2 Avoid working on deep dark carpets. 3 Clean the stair detection sensors by using a soft cloth. 4 Check the bumper and clean.
2	The robot do not work	1 Turn on the power switch button. 2 Check the battery capacity, and charge the robot. Check again after full charging.
3	The robot do not recharge automatically	1 Make sure the indication light on charging station is on. 2 Check if there are obstacles between robot and charging station. 3 When low battery, please charge the robot by using adapter.
4	The robot cannot be recharged	1 Please use approved adapter and make sure adapter plugged. 2 When the robot is damaged, please do not use. Contact after sales.
5	Remote control do not work	1 Check the remote control battery; Check the signal sensor on the robot clean it.

6 Product Parameters

Main machine	Model	SI-340/SI-340A
	Size	320*320*85mm
	Net weight	2.7KG
	Input	19V⎓ 1A
	Battery Voltage	19V⎓
	Power Consumption	25W
	Battery Type	Li-ion 2600 mAh 14.4V
	Dustbin volume	400ml
	Charging time	4-6h
	Working time	90-120min

Charing base	Model	SY-C-33 （for SI-340）
	Model	SY-C-35 （for SI-340A）
	Input(SY-C-33)	19V⎓ 1A
	Output (SY-C-33)	19V⎓ 1A
	Input(SY-C-35)	19V⎓ 1A
	Output (SY-C-35)	19V⎓ 1A

Adaptor	Model	YLS0241A-E190100
	Input	100-240V 50/60HZ 0.8A Max.
	Output	19V⎓ 1A

WiFi Frequency Range	2.412-2.472GHz
Antenna Gain	3 dBi
Antenna Configuration	Single Transmitting
Transmitted power	17.39dB

This device complies with part 15 of the FCC Rules. Operation is subject to the following two conditions:
(1) This device may not cause harmful interference, and
(2) this device must accept any interference received, including interference that may cause undesired operation.

Any Changes or modifications not expressly approved by the party responsible for compliance could void the user's authority to operate the equipment.

Note: This equipment has been tested and found to comply with the limits for a Class B digital device, pursuant to part 15 of the FCC Rules. These limits are designed to provide reasonable protection against harmful interference in a residential installation. This equipment generates uses and can radiate radio frequency energy and, if not installed and used in accordance with the instructions, may cause harmful interference to radio communications. However, there is no guarantee that interference will not occur in a particular installation. If this equipment does cause harmful interference to radio or television reception, which can be determined by turning the equipment off and on, the user is encouraged to try to correct the interference by one or more of the following measures:
-Reorient or relocate the receiving antenna.
-Increase the separation between the equipment and receiver.
-Connect the equipment into an outlet on a circuit different from that to which the receiver is connected.
-Consult the dealer or an experienced radio/TV technician for help.

This equipment complies with FCC radiation exposure limits set forth for an uncontrolled environment. This equipment should be installed and operated with minimum distance 20cm between the radiator & your body.

1 Important Safety Instructions

When people with disabilities (body perception and thinking ability defects) and children using, need to be operated under the guardian to accompany with product use and get the related instructions.

WARNING: For the purposes of recharging the battery, only use the detachable supply unit provided with this appliance.

1. Non-rechargeable batteries are not to be recharged in Remote control
2. different types of batteries or new and used batteries are not to be mixed in Remote control
3. batteries are to be inserted with the correct polarity into Remote control
4. Exhausted batteries are to be removed from the Remote control and safely disposed of.
5. if the Remote control is to be stored unused for a long period, the batteries should be removed

The instructions for appliances having a part of class III construction supplied from a detachable power supply unit shall state that the appliance is only to be used with the power supply unit provided with the appliance.

The instructions for vacuum cleaners incorporating rotating brushes or similar devices, and watersuction cleaning appliances, shall state that the plug must be removed from the socket-outlet before cleaning or maintaining the appliance. Main switch must be OFF before cleaning or maintaining the appliance.

Disposal

This product is subject to the provisions of European Directive 2012/19/EC. The symbol showing a wheelie bin crossed through indicates that the product requires separate refuse collection in the European Union. This applies to the product and all accessories marked with this symbol. Products identified with this symbol may not be discarded with normal household waste, but must be taken to a collection point for recycling electric and electronic appliances. Recycling helps to reduce the consumption of raw materials and protect the environment

The battery integrated into this device must not be disposed of in household waste. The device must be disposed of properly with the battery installed

Packaging

When disposing of the packaging, make sure you comply with the environmental regulations applicable in your country

Company name : Sinsion Technology Industrial Co., Ltd.
Company Address : No.11,Tongle Rd.,Tangxia town, Pengjiang Qu, Jiangmen City, Guangdong Province, 529085 People's Republic of China