MEASUREMENT REPORT

(FCC : Part 15 Subpart C (15.249) / ANSI C63.4-2014/C63.10-2013)

Testing Laboratory
1288

Product	Wireless Keyboard
Trade Name	ikbc
Model No.	W210, W200
Applicant	MISTEL CO LTD
Applicant Address	10F-4 No 17 Ln 91 Sec1 Neihu Rd Neihu Dist Taipei City114 TW Taiwan

Report Number	MLT1910P15001
Applicant	MISTEL CO LTD
Product	Wireless Keyboard
Sample Received Date	2019/09/23
Sample Tested Date	2019/11/27

Report Prepared By	Jesse Tien
Signature	Jesse Tien
Date Prepared	2019/11/28

Report Authorized By	Roger Chen
Signature	Roger Chen
Date Authorized	2019/11/28

Test By

Max Light Technology Co., Ltd.
No.74-4, Shibachong Xi, Shiding Dist., New Taipei City 223,
Taiwan R.O.C.
Office : Tel: 886-2-2363-2447 Fax: 886-2-2363-2597
Lab. : Tel: 886-2-2663-3486 Fax: 886-2-2663-3582

It may be duplicated completely for legal use with the allowance of the applicant.
It shall not be reproduced except in full, without the written approval of our laboratory.
This test report not include the evaluation of MU.
The test results only relate to the submitted test sample.

Table of Contents

History of Test Report....5
1. General Information....6
2. Report of Measurements and Examinations....7
2.1 List of Measurements and Examinations....7
3. Test Configuration of Equipment under Test....8
3.1 Carrier Frequency of Channels....8
3.2 Test Mode and Test Software....9
3.3 TEST Methodology & General Test Procedures....10
3.4 Measurement Uncertainty....11
3.5 Description of the Support Equipments....11
4. Test and measurement equipment....12
4.1 Calibration....12
4.2 Equipment....12
5. Antenna Requirements....14
5.1 Standard Applicable....14
5.2 Antenna Construction and Directional Gain....14
6. Test of Conducted Emission....15
6.1 Test Limit....15
6.2 Test Procedures....15
6.3 Typical Test Setup....16
6.4 Test Result and Data....17
7. Test of Radiated Emission....18
7.1 Test Limit....18
7.2 Test Procedures....19
7.3 Typical Test Setup....20
7.4 Test Result and Data (Fundamental)....21
7.5 Test Result and Data (9kHz ~ 30MHz)....24
7.6 Test Result and Data (30MHz ~ 1GHz, worst emissions found)....24
7.7 Test Result and Data (Above 1GHz)....25
7.8 Test Result and Data (Band Edge)....28
8. 20dB Bandwidth Measurement....30
8.1 Test Setup....30

8.2 Test Limit 30
8.3 Test Procedures 30
8.4 Test Data 30
9. Restricted Bands of Operation 33
9.1 Labeling Requirement 33
Appendix I - Photograph of test configuration 34
Appendix II - Photograph of EUT 2 37

History of Test Report

Original Report Issue Date: 2019/11/28

■ No additional attachment

☐ Additional attachments were issued as in the following record:

Attachment No.	Issue Date	Description
MLT1910P15001	2019/11/28	Original Report

1. General Information

1.1 Introduction

The following measurement report is submitted on behalf of MISTEL CO LTD In support of a Class B Digital Device certification in accordance with Part2 Subpart J and Part 15 Subpart C of the Commission's and Regulations.

1.2 Customer Details

Applicant Name	MISTEL CO LTD
Applicant Address	10F-4 No 17 Ln 91 Sec1 Neihu Rd Neihu Dist Taipei City114 TW Taiwan
Manufacturer Name	Solid Year Co., Ltd.
Manufacturer Address	18F, Tower., No. 97, Sec. 1, Xintal 5th, Xizhi Dist, New Taipei City 22175, Taiwan

1.3 Technical data of EUT

Equipment	Wireless Keyboard
Model No	W210, W200
Model Difference	The difference among series of models W200 is differences are key numbers and dimension. All covered models have electrically identical on the circuitry to each other.
FCC ID	2AURQ-24W210
Power Type	DC 1.5V x 2
Type of Modulation	2408~2474 MHz
Transfer rate	GFSK
Type of Antenna	Printed Antenna
Frequency of Channel	34

During testing the EUT was operated at Tx or Rx mode for each emission measured. This was done in order to ensure that maximum emission levels were attained.

2. Report of Measurements and Examinations

2.1 List of Measurements and Examinations

FCC Rule	. Description of Test	Result
15.249(a)	. Field Strength of Fundamental Emissions	Pass
15.249(d)	. Band Edge Emissions	Pass
15.249(a)(d)	. Radiated Emissions	Pass
15.207	. Conducted Emissions	Not applicable
15.215(c)	. 20dB Bandwidth	Pass
15.203	. Antenna Requirements	Pass

3. Test Configuration of Equipment under Test

3.1 Carrier Frequency of Channels

Channel	Frequency (MHz)	Channel	Frequency (MHz)	Channel	Frequency (MHz)
01	2408	13	2432	25	2456
02	2410	14	2434	26	2458
03	2412	15	2436	27	2460
04	2414	16	2438	28	2462
05	2416	17	2440	29	2464
06	2418	18	2442	30	2466
07	2420	19	2444	31	2468
08	2422	20	2446	32	2470
09	2424	21	2448	33	2472
10	2426	22	2450	34	2474
11	2428	23	2452	--	--
12	2430	24	2454	--	--

3.2 Test Mode and Test Software

a. During testing, the interface cables and equipment positions were varied according to ANSI C63.10.

b. The complete test system included PC and EUT for RF test.

c. An executive “Engineering mode” was executed to keep transmitting and receiving data via Wireless.

d. New battery was used for all testing and the worst radiated emission.

e. The following test modes were performed for test:

- GFSK: CH 01: 2408MHz, CH 17: 2440MHz, CH 34: 2474MHz.

3.3 TEST Methodology & General Test Procedures

All testing as described bellowed were performed in accordance ANSI C63.4:2014, C63.10:2013 and FCC CFR 47 Part 15 Subpart C.

Conducted Emissions

The EUT is placed on a wood table, which is at 0.8 m above ground plane acceding to clause 15.207 and requirements of ANSI C63.4 and C63.10. Conducted emissions from the EUT measured in the frequency range between 0.15 MHz and 30MHz are using CISPR Quasi-Peak / Average detectors. The resolution bandwidth of test receiver/spectrum analyzer is 9 KHz and video bandwidth is 120 KHz.

Radiated Emissions

The EUT is a placed on a turn table, which is 0.8 m (1.5 m for above 1 GHz) above ground plane. The turntable was rotated through 360 degrees to determine the position of maximum emission level. The EUT is placed at 3m away from the receiving antenna, which varied from 1m to 4m to find out the highest emission. Each emission was to be maximized by changing the polarization of receiving antenna both horizontal and vertical.

1) Putting the EUT on the platform and turning on the EUT (on/off button on the bottom of the EUT).
2) Setting test channel described as “Channel setting and operating condition”, and testing channel by channel.
3) For the spurious emission test based on ANSI C63.4 and C63.10, the resolution bandwidth of test receiver/spectrum analyzer is 120 KHz and video bandwidth is 300 KHz for Quasi-peak detection at frequency 30 MHz~1GHz. The resolution bandwidth of test receiver/spectrum analyzer is 1 MHz and video bandwidth is 3 MHz for Peak detection at frequency above 1GHz. The resolution bandwidth of test receiver/spectrum analyzer is 1MHz and video bandwidth is 3MHz RMS detector for Average Value at frequency above 1GHz.

3.4 Measurement Uncertainty

This uncertainty represents an expanded uncertainty expressed at approximately the 95% confidence level using a coverage factor of k=2.

Measurement Item	MU
Conducted emissions	±2.24 dB
Radiated emissions (30MHz ~ 1GHz)	±3.96 dB
Radiated emissions (above 1GHz)	±3.74 dB

Measurement Item	MU
Radio Frequency	±2.18E-08%
Total RF power (conducted)	±1.32 dB
RF power density (conducted)	±0.44 dB
Spurious emissions (conducted)	±2.36 dB
All emissions (radiated)	±4.24 dB

3.5 Description of the Support Equipments

Setup Diagram

See test photographs attached in appendix 1 for the actual connections between EUT and support equipment.

4. Test and measurement equipment

4.1 Calibration

The measuring equipment utilized to perform the tests documented in the report has been calibrated once a year or in accordance with the manufacturer's recommendations, and is traceable to recognized national standards.

4.2 Equipment

The following list contains measurement equipment used for testing. The equipment conforms to the requirement of CISPR 16-1, ANSI C63.2 and. Other required standards.

Calibration of all test and measurement, including any accessories that may effect such calibration, is checked frequently to ensure the accuracy. Adjustments are made and correction factors are applied in accordance with the instructions contained in the respective.

3.3 Test Equipment List:

Item	Instrument	Mfr/Brand	Model No.	Serial No	Calibrated Date	Next Cal. Date
1.	Pre Amplifier	MLT	PREAMP6G-01	20110209	2019/03/19	2020/03/19
2.	Pre Amplifier	MLT	PREAMP6G-02	20110301	2019/03/19	2020/03/19
3.	Biconilog Antenna	EMCO	3142C	00044568	2019/09/23	2020/09/23
4.	Spectrum Analyzer	Agilent	E7403A	US40240137	2019/03/25	2020/03/25
5.	LISN	EMCO	3825/2	2658	2019/01/15	2020/01/15
6.	Spectrum Analyzer	Agilent	E4446A	US44300422	2019/03/13	2020/03/13
7.	Home Antenna	SCHWARZBECK	BBHA 9120D	304	2019/01/07	2020/01/07
8.	Spectrum Analyzer	Agilent	E4407B	US44300422	2019/03/13	2020/03/13
9.	Pre Amplifier	TA	0.10~19.1GHz 60dBm	RF01	2019/03/14	2020/03/14
10.	Pre Amplifier	Herotek	A402-417	30690	2018/12/27	2019/12/27
11.	Spectrum Analyzer	Agilent	N9010A	MY50060164	2019/08/26	2020/08/26

5. Antenna Requirements

5.1 Standard Applicable

For intentional device, according to FCC 47 CFR Section 15.203, an intentional radiator shall be designed to ensure that no antenna other than that furnished by the responsible party shall be used with the device.

And According to 15.247 (b), if transmitting antennas of directional gain greater than 6 dBi are used, the power shall be reduced by the amount in dB that the directional gain of the antenna exceeds 6dBi.

5.2 Antenna Construction and Directional Gain

Antenna Type: Printed Antenna
Antenna Gain: 2.15 dBi (Manufacturer Provide)

6. Test of Conducted Emission

6.1 Test Limit

Conducted Emissions were measured from 150 kHz to 30 MHz with a bandwidth of 9 KHz on the 120 VAC power and return leads of the EUT according to the methods defined in ANSI C63.4-2014. The EUT was placed on a nonmetallic stand in a shielded room 0.8 meters above the ground plane. The interface cables and equipment positioning were varied within limits of reasonable applications to determine the position produced maximum conducted emissions.

Frequency (MHz)	Quasi Peak (dB μ V)	Average (dB μ V)
0.15 – 0.5	66-56*	56-46*
0.5 – 5.0	56	46
5.0 – 30.0	60	50

*Decreases with the logarithm of the frequency.

6.2 Test Procedures

a. The EUT was placed 0.4 meter from the conducting wall of the shielding room was kept at least 80 centimeters from any other grounded conducting surface.
b. Connect EUT to the power mains through a line impedance stabilization network (LISN).
c. All the support units are connecting to the other LISN.
d. The LISN provides 50 ohm coupling impedance for the measuring instrument.
e. The FCC states that a 50 ohm, 50 micro-Henry LISN should be used.
f. Both sides of AC line were checked for maximum conducted interference.
g. The frequency range from 150 kHz to 30 MHz was searched.
h. Set the test-receiver system to Peak Detect Function and Specified Bandwidth with Maximum Hold Mode.

6.3 Typical Test Setup

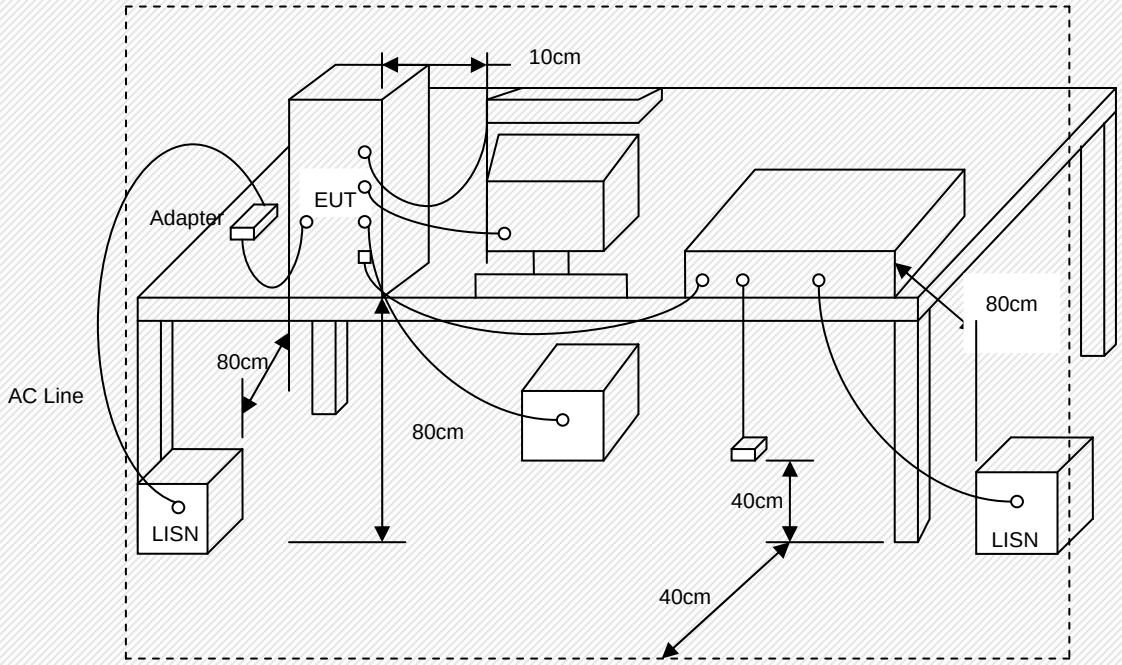

6.4 Test Result and Data

The EUT is battery powered, so no conduction test is required.

7. Test of Radiated Emission

7.1 Test Limit

Radiated Emissions were measured from 9 KHz to 25 GHz and return leads of the EUT according to the methods defined in ANSI C63.4-2014 and C63.10-2013. In any 100kHz bandwidth outside the frequency band in which the spread spectrum or digitally modulated intentional radiator is operating, the radio frequency power that is produced by the intentional radiator shall be at least 20dB below that in the 100kHz bandwidth within the band that contains the highest level of the desired power, based on either an RF conducted or a radiated measurement. If the transmitter measurement is based on the maximum conducted output power, the attenuation required under this paragraph shall be 30dB instead of 20dB. In addition, radiated emissions which fall in section 15.205(a) the restricted bands must also comply with the radiated emission limit specified in section 15.209(a).

Frequency (MHz)	Field Strength (microvolt/meter)	Measurement Distance (meters)
0.009 ~ 0.490	2400/F(kHz)	300
0.490 ~ 1.705	24000/F(kHz)	30
1.705 ~ 30.0	30	30
30 ~ 88	100	3
88 ~ 216	150	3
216 ~ 960	200	3
Above 960	500	3

Fundamental Frequency (MHz)	Field Strength of Fundamental (millivolts/meter)	Field Strength of Fundamental (dBμV/m at 3-meter)	Detector
902 ~ 928 2400 ~ 2483 5725 ~ 5875	50	94	Average

Notes:

Peak radio frequency emissions is 20 dB above the maximum permitted average emission limit applicable to the equipment under test.

Emissions radiated outside of the specified frequency bands, except for harmonics, shall be attenuated by at least 50 dB below the level of the fundamental or to the general radiated emission limits in § 15.209, whichever is the lesser attenuation.

Fundamental Frequency (MHz)	Field Strength of Fundamental (microvolts/meter)	Field Strength of Fundamental (dBμV/m at 3-meter)	Detector
902 ~ 928 2400 ~ 2483 5725 ~ 5875	500	54	Average

Notes:

Peak radio frequency emissions is 20 dB above the maximum permitted average emission limit applicable to the equipment under test.

7.2 Test Procedures

a. The EUT was placed on a rotatable table top 0.8 meter above ground (30 MHz to 1 GHz).
b. The EUT was placed on a rotatable table top 1.5 meter above ground (above 1 GHz).
c. The EUT was set 3 meters from the interference receiving antenna which was mounted on the top of a variable height antenna tower.
d. The table was rotated 360 degrees to determine the position of the highest radiation.
e. The antenna is a broadband antenna and its height is varied between one meter and four meters above ground to find the maximum value of the field strength both horizontal polarization and vertical polarization of the antenna are set to make the measurement.
f. For each suspected emission the EUT was arranged to its worst case and then tune the antenna tower (from 1 M to 4 M) and turn table (from 0 degree to 360 degrees) to find the maximum reading.
g. Set the test-receiver system to Peak or CISPR quasi-peak Detect Function and specified bandwidth with Maximum Hold Mode.
h. If the emission level of the EUT in peak mode was 3 dB lower than the limit specified, then testing will be stopped and peak values of EUT will be reported, otherwise, the emissions which do not have 3 dB margin will be repeated one by one using the quasi-peak method and reported.
i. For testing above 1GHz, the emission level of the EUT in peak mode was 20dB lower than average limit (that means the emission level in peak mode also complies with the limit in average mode), then testing will be stopped and peak values of EUT will be reported, otherwise, the emissions will be measured in average mode again and reported.

7.3 Typical Test Setup

For radiated emissions from 30MHz to 1GHz

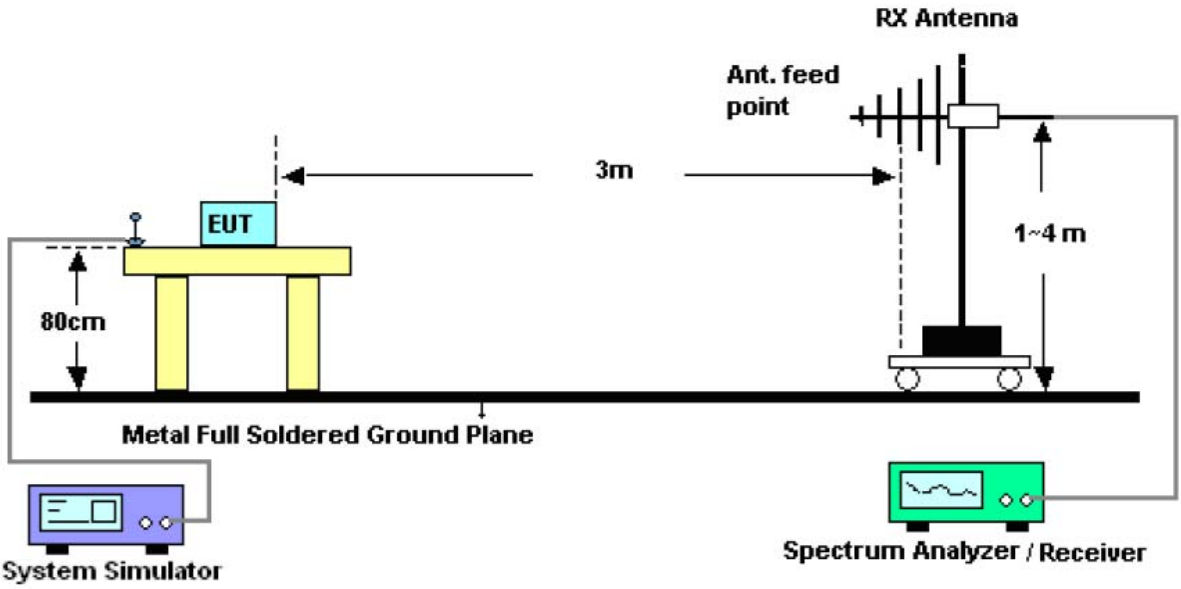

For radiated emissions above 1GHz

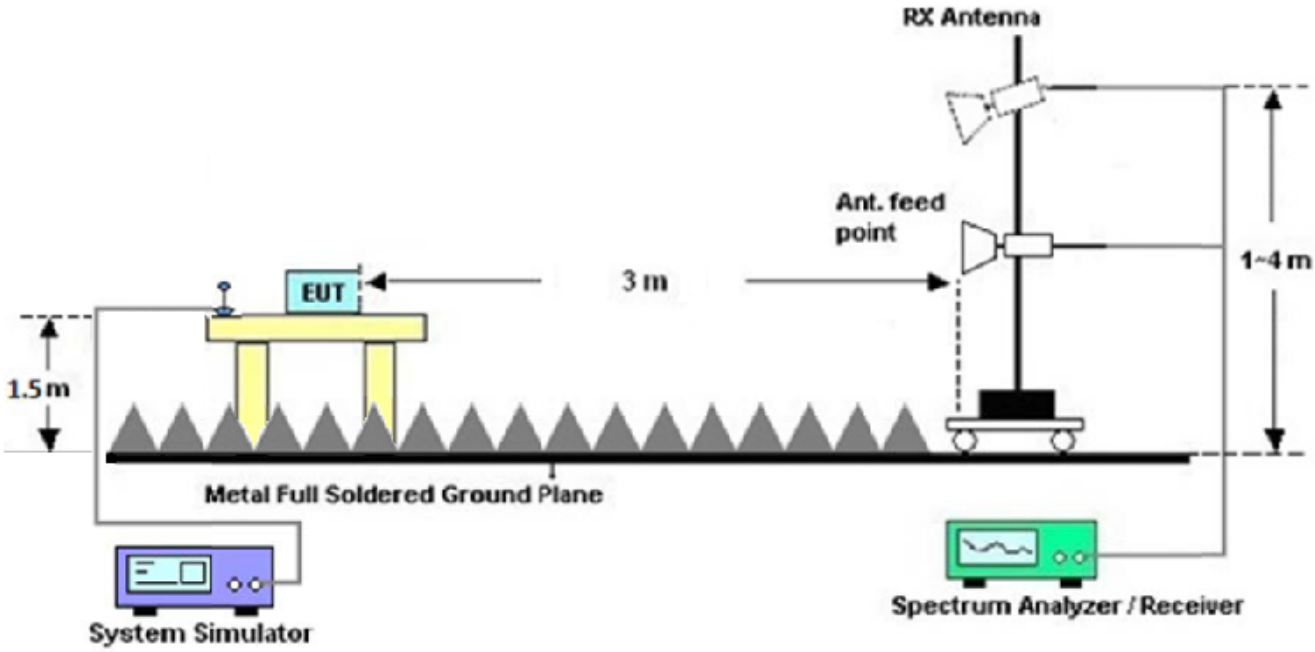

7.4 Test Result and Data (Fundamental)

Power :	DC 3V		
Test Mode :	CH1	Temperature :	28 °C
Test Date :	Oct. 17, 2019	Humidity :	75%
Memo :			

Radiated Emissions (VERTICAL)									
Frequency (MHz)	Read (dBuV)		Factor	Amplitude (dBuV/m)		Limits (dBuV/m)		Margin (dB)	
	PK	AV		PK	AV	PK	AV	PK	AV
2407.54	119.28	--	-32.96	86.32	--	114	94	-27.68	--

Radiated Emissions (HORIZONTAL)									
Frequency (MHz)	Read (dBuV)		Factor	Amplitude (dBuV/m)		Limits (dBuV/m)		Margin (dB)	
	PK	AV		PK	AV	PK	AV	PK	AV
2407.46	117.89	--	-32.96	84.93	--	114	94	-29.07	--

Notes : Margin<0 is Pass , Margin≧0 is Fail

Power :	DC 3V		
Test Mode :	CH17	Temperature :	28 °C
Test Date :	Oct. 17, 2019	Humidity :	75%
Memo :			

Radiated Emissions (VERTICAL)									
Frequency (MHz)	Read (dBuV)		Factor	Amplitude (dBuV/m)		Limits (dBuV/m)		Margin (dB)	
	PK	AV		PK	AV	PK	AV	PK	AV
2439.52	119.38	--	-33.08	86.30	--	114	94	-27.70	--

Radiated Emissions (HORIZONTAL)									
Frequency (MHz)	Read (dBuV)		Factor	Amplitude (dBuV/m)		Limits (dBuV/m)		Margin (dB)	
	PK	AV		PK	AV	PK	AV	PK	AV
2439.46	118.28	--	-33.08	85.20	--	114	94	-28.80	--

Notes : Margin<0 is Pass , Margin≧0 is Fail

Power :	DC 3V		
Test Mode :	CH34	Temperature :	28 °C
Test Date :	Oct. 17, 2019	Humidity :	75%
Memo :			

Radiated Emissions (VERTICAL)									
Frequency (MHz)	Read (dBuV)		Factor	Amplitude (dBuV/m)		Limits (dBuV/m)		Margin (dB)	
	PK	AV		PK	AV	PK	AV	PK	AV
2473.85	118.93	--	-32.84	86.09	--	114	94	-27.91	--

Radiated Emissions (HORIZONTAL)									
Frequency (MHz)	Read (dBuV)		Factor	Amplitude (dBuV/m)		Limits (dBuV/m)		Margin (dB)	
	PK	AV		PK	AV	PK	AV	PK	AV
2473.41	118.24	--	-32.85	85.39	--	114	94	-28.61	--

Notes : Margin<0 is Pass , Margin≧0 is Fail

7.5 Test Result and Data (9kHz ~ 30MHz)

The 9kHz - 30MHz spurious emission is under limit 20dB more.

7.6 Test Result and Data (30MHz ~ 1GHz, worst emissions found)

Power :	DC 3V		
Test Mode :	CH0	Temperature :	28 °C
Test Date :	Oct. 24, 2019	Humidity :	70 %
Memo :			

Radiated Emissions (VERTICAL)					
Frequency (MHz)	Read (dBuV)	Factor	Amplitude (dBuV/m)	Limits (dBuV/m)	Margin (dB)
124.04	51.43	-31.32	20.11	43.5	-23.39
157.05	39.97	-29.20	10.77	43.5	-32.73
209.97	52.17	-27.50	24.67	43.5	-18.83
249.99	56.55	-25.06	31.49	46	-14.51
470.44	35.55	-18.15	17.40	46	-28.60
662.58	39.61	-13.21	26.40	46	-19.60

Radiated Emissions (HORIZONTAL)					
Frequency (MHz)	Read (dBuV/m)	Factor	Amplitude (dBuV/m)	Limits (dBuV/m)	Margin (dB)
124.97	51.01	-31.43	19.58	43.5	-23.92
158.90	47.24	-29.15	18.09	43.5	-25.41
251.66	51.80	-24.74	27.06	46	-18.94
317.15	46.42	-23.19	23.23	46	-22.77
414.96	40.68	-20.30	20.38	46	-25.62
740.03	37.72	-10.66	27.06	46	-18.94

Notes : Margin<0 is Pass , Margin≧0 is Fail

7.7 Test Result and Data (Above 1GHz)

Power	:	DC 3V			
Test Mode	:	CH1	Temperature	:	28 °C
Test Date	:	Oct. 17, 2019	Humidity	:	75 %
Memo	:				

Radiated Emissions (VERTICAL)									
Frequency (MHz)	Read (dBuV)		Factor	Amplitude (dBuV/m)		Limits (dBuV/m)		Margin (dB)	
	PK	AV		PK	AV	PK	AV	PK	AV
3164.50	69.57	--	-31.46	38.11	--	74	54	-35.89	--
4263.00	68.99	--	-28.99	40.00	--	74	54	-34.00	--
4816.50	66.54	--	-28.13	38.41	--	74	54	-35.59	--
4997.50	73.82	--	-27.82	46.00	--	74	54	-28.00	--
5998.50	66.84	--	-23.40	43.44	--	74	54	-30.56	--
7224.50	68.39	--	-21.33	47.06	--	74	54	-26.94	--

Radiated Emissions (HORIZONTAL)									
Frequency (MHz)	Read (dBuV)		Factor	Amplitude (dBuV/m)		Limits (dBuV/m)		Margin (dB)	
	PK	AV		PK	AV	PK	AV	PK	AV
3184.00	68.57	--	-31.35	37.22	--	74	54	-36.78	--
4009.50	66.22	--	-29.69	36.53	--	74	54	-37.47	--
4816.50	66.79	--	-28.13	38.66	--	74	54	-35.34	--
4991.00	68.85	--	-27.88	40.97	--	74	54	-33.03	--
5998.50	66.90	--	-23.40	43.50	--	74	54	-30.50	--
7224.50	62.21	--	-21.33	40.88	--	74	54	-33.12	--

Notes : Margin<0 is Pass , Margin≧0 is Fail

Power :	DC 3V		
Test Mode :	CH17	Temperature :	28°C
Test Date :	Oct. 17, 2019	Humidity :	75 %
Memo :			

Radiated Emissions (VERTICAL)									
Frequency (MHz)	Read (dBuV)		Factor	Amplitude (dBuV/m)		Limits (dBuV/m)		Margin (dB)	
	PK	AV		PK	AV	PK	AV	PK	AV
3171.00	68.99	--	-31.42	37.57	--	74	54	-36.43	--
4256.50	69.06	--	-29.00	40.06	--	74	54	-33.94	--
4880.50	66.52	--	-28.12	38.40	--	74	54	-35.60	--
4997.50	71.49	--	-27.82	43.67	--	74	54	-30.33	--
5998.50	66.65	--	-23.40	43.25	--	74	54	-30.75	--
7320.50	67.92	--	-21.44	46.48	--	74	54	-27.52	--

Radiated Emissions (HORIZONTAL)									
Frequency (MHz)	Read (dBuV)		Factor	Amplitude (dBuV/m)		Limits (dBuV/m)		Margin (dB)	
	PK	AV		PK	AV	PK	AV	PK	AV
3067.00	68.89	--	-31.31	37.58	--	74	54	-36.42	--
4003.00	66.53	--	-29.72	36.81	--	74	54	-37.19	--
4880.50	67.31	--	-28.12	39.19	--	74	54	-34.81	--
4991.00	70.09	--	-27.88	42.21	--	74	54	-31.79	--
5998.50	65.69	--	-23.40	42.29	--	74	54	-31.71	--
7320.50	62.88	--	-21.44	41.44	--	74	54	-32.56	--

Notes : Margin<0 is Pass , Margin≧0 is Fail

Power :	DC 3V		
Test Mode :	CH34	Temperature :	28 °C
Test Date :	Oct. 17, 2019	Humidity :	75 %
Memo :			

Radiated Emissions (VERTICAL)									
Frequency (MHz)	Read (dBuV)		Factor	Amplitude (dBuV/m)		Limits (dBuV/m)		Margin (dB)	
	PK	AV		PK	AV	PK	AV	PK	AV
3067.00	69.18	--	-31.31	37.87	--	74	54	-36.13	--
4256.50	69.77	--	-29.00	40.77	--	74	54	-33.23	--
4948.50	66.18	--	-28.08	38.10	--	74	54	-35.90	--
4991.00	72.39	--	-27.88	44.51	--	74	54	-29.49	--
5998.50	67.18	--	-23.40	43.78	--	74	54	-30.22	--
7422.50	69.51	--	-20.84	48.67	--	74	54	-25.33	--

Radiated Emissions (HORIZONTAL)									
Frequency (MHz)	Read (dBuV)		Factor	Amplitude (dBuV/m)		Limits (dBuV/m)		Margin (dB)	
	PK	AV		PK	AV	PK	AV	PK	AV
3190.50	69.01	--	-31.31	37.70	--	74	54	-36.30	--
3990.00	66.20	--	-29.77	36.43	--	74	54	-37.57	--
4948.50	66.89	--	-28.08	38.81	--	74	54	-35.19	--
4997.50	71.09	--	-27.82	43.27	--	74	54	-30.73	--
5998.50	66.91	--	-23.40	43.51	--	74	54	-30.49	--
7422.50	62.84	--	-20.84	42.00	--	74	54	-32.00	--

Notes : Margin<0 is Pass , Margin≧0 is Fail

7.8 Test Result and Data (Band Edge)

Power :	DC 3V		
Test Mode :	CH1	Temperature :	28 °C
Test Date :	Oct. 17, 2019	Humidity :	75%
Memo :			

Radiated Emissions (VERTICAL)									
Frequency (MHz)	Read (dBuV)		Factor	Amplitude (dBuV/m)		Limits (dBuV/m)		Margin (dB)	
	PK	AV		PK	AV	PK	AV	PK	AV
2395.83	84.16	--	-32.93	51.23	--	74	54	-22.77	--

Radiated Emissions (HORIZONTAL)									
Frequency (MHz)	Read (dBuV)		Factor	Amplitude (dBuV/m)		Limits (dBuV/m)		Margin (dB)	
	PK	AV		PK	AV	PK	AV	PK	AV
2397.22	80.52	--	-32.93	47.59	--	74	54	-26.41	--

Notes : Margin<0 is Pass , Margin≧0 is Fail

Power :	DC 3V		
Test Mode :	CH34	Temperature :	28 °C
Test Date :	Oct. 17, 2019	Humidity :	75%
Memo :			

Radiated Emissions (VERTICAL)									
Frequency (MHz)	Read (dBuV)		Factor	Amplitude (dBuV/m)		Limits (dBuV/m)		Margin (dB)	
	PK	AV		PK	AV	PK	AV	PK	AV
2485.61	84.67	--	-32.74	51.93	--	74	54	-22.07	--

Radiated Emissions (HORIZONTAL)									
Frequency (MHz)	Read (dBuV)		Factor	Amplitude (dBuV/m)		Limits (dBuV/m)		Margin (dB)	
	PK	AV		PK	AV	PK	AV	PK	AV
2484.34	82.86	--	-32.75	50.11	--	74	54	-23.89	--

Notes:

1. Amplitude = Reading Amplitude + Factor
2. Factor = Antenna Factor + Cable Loss – Amplifier Gain
3. The resolution bandwidth of test receiver/spectrum analyzer is 120 KHz and video bandwidth is 300 KHz for Quasi-peak detection at frequency 30 MHz~1GHz.
4. The resolution bandwidth of test receiver/spectrum analyzer is 1 MHz and video bandwidth is 3 MHz for Peak detection at frequency above 1GHz.
5. The resolution bandwidth of test receiver/spectrum analyzer is 1MHz and video bandwidth is 3 MHz RMS detector for Average Value at frequency above 1GHz
6. Where limits are specified for both average and peak detector functions, if the peak measured value complies with the average limit, it is unnecessary to perform an average measurement at frequency above 1GHz.
7. Margin<0 is Pass , Margin≧0 is Fail.

8. 20dB Bandwidth Measurement

8.1 Test Setup

Please refer to section 7.3 (for radiated emissions above 1GHz).

8.2 Test Limit

N/A

8.3 Test Procedures

a. Set RBW=100KHz and VBW=300KHz.
b. The 20 dB bandwidth is defined as the total spectrum the power of which is higher than peak power minus 20 dB.
c. The 20 dB Bandwidth was measured and recorded.

8.4 Test Data

Test Date: Nov. 18, 2019 Temperature: 25℃
Atmospheric pressure: 1010 hPa Humidity: 70%

Modulation Type	Channel	Frequency (MHz)	20dB Bandwidth (MHz)
GFSK	01	2408	2.27
	17	2440	2.33
	34	2474	2.30

Modulation Standard: GFSK
Channel: 01

Modulation Standard: GFSK
Channel: 17

Modulation Standard: GFSK
Channel: 34

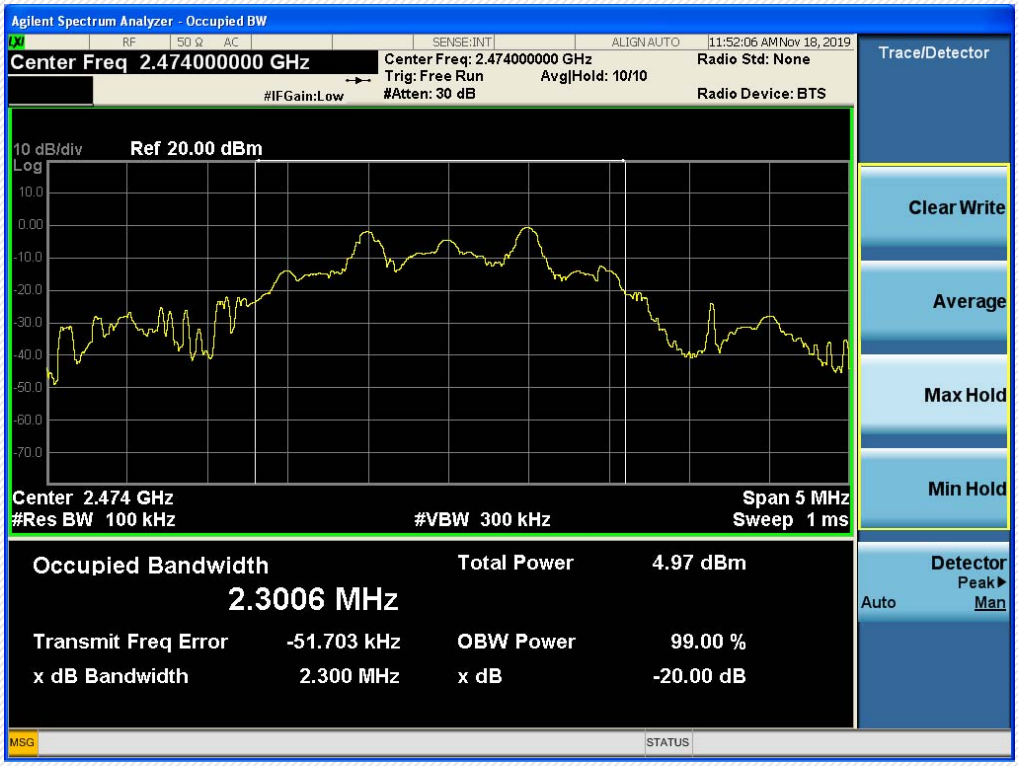

9. Restricted Bands of Operation

Only spurious emissions are permitted in any of the frequency bands listed below:

MHz	MHz	MHz	GHz
0.09000 – 0.11000	16.42000 – 16.42300	399.9 – 410.0	4.500 – 5.150
0.49500 – 0.505**	16.69475 – 16.69525	608.0 – 614.0	5.350 – 5.460
2.17350 – 2.19050	16.80425 – 16.80475	960.0 – 1240.0	7.250 – 7.750
4.12500 – 4.12800	25.50000 – 25.67000	1300.0 – 1427.0	8.025 – 8.500
4.17725 – 4.17775	37.50000 – 38.25000	1435.0 – 1626.5	9.000 – 9.200
4.20725 – 4.20775	73.00000 – 74.60000	1645.5 – 1646.5	9.300 – 9.500
6.21500 – 6.21800	74.80000 – 75.20000	1660.0 – 1710.0	10.600 – 12.700
6.26775 – 6.26825	108.00000 – 121.94000	1718.8 – 1722.2	13.250 – 13.400
6.31175 – 6.31225	123.00000 – 138.00000	2200.0 – 2300.0	14.470 – 14.500
8.29100 – 8.29400	149.90000 – 150.05000	2310.0 – 2390.0	15.350 – 16.200
8.36200 – 8.36600	156.52475 – 156.52525	2483.5 – 2500.0	17.700 – 21.400
8.37625 – 8.38675	156.70000 – 156.90000	2655.0 – 2900.0	22.010 – 23.120
8.41425 – 8.41475	162.01250 – 167.17000	3260.0 – 3267.0	23.600 – 24.000
12.29000 – 12.29300	167.72000 – 173.20000	3332.0 – 3339.0	31.200 – 31.800
12.51975 – 12.52025	240.00000 – 285.00000	3345.8 – 3358.0	36.430 – 36.500
12.57675 – 12.57725	322.00000 – 335.40000	3600.0 – 4400.0	Above 38.6
13.36000 – 13.41000			

**: Until February 1, 1999, this restricted band shall be 0.490-0.510 MHz

9.1 Labeling Requirement

The device shall bear the following statement in a conspicuous location on the device: This device complies with part 15 of the FCC Rules. Operation is subject to the following two conditions: (1) This device may not cause harmful interference, and (2) this device must accept any interference received, including interference that may cause undesired operation.