Cuisinart®

Oakmont
Pellet Grill and Smoker

ASSEMBLY INSTRUCTIONS

Model SMK2036AS

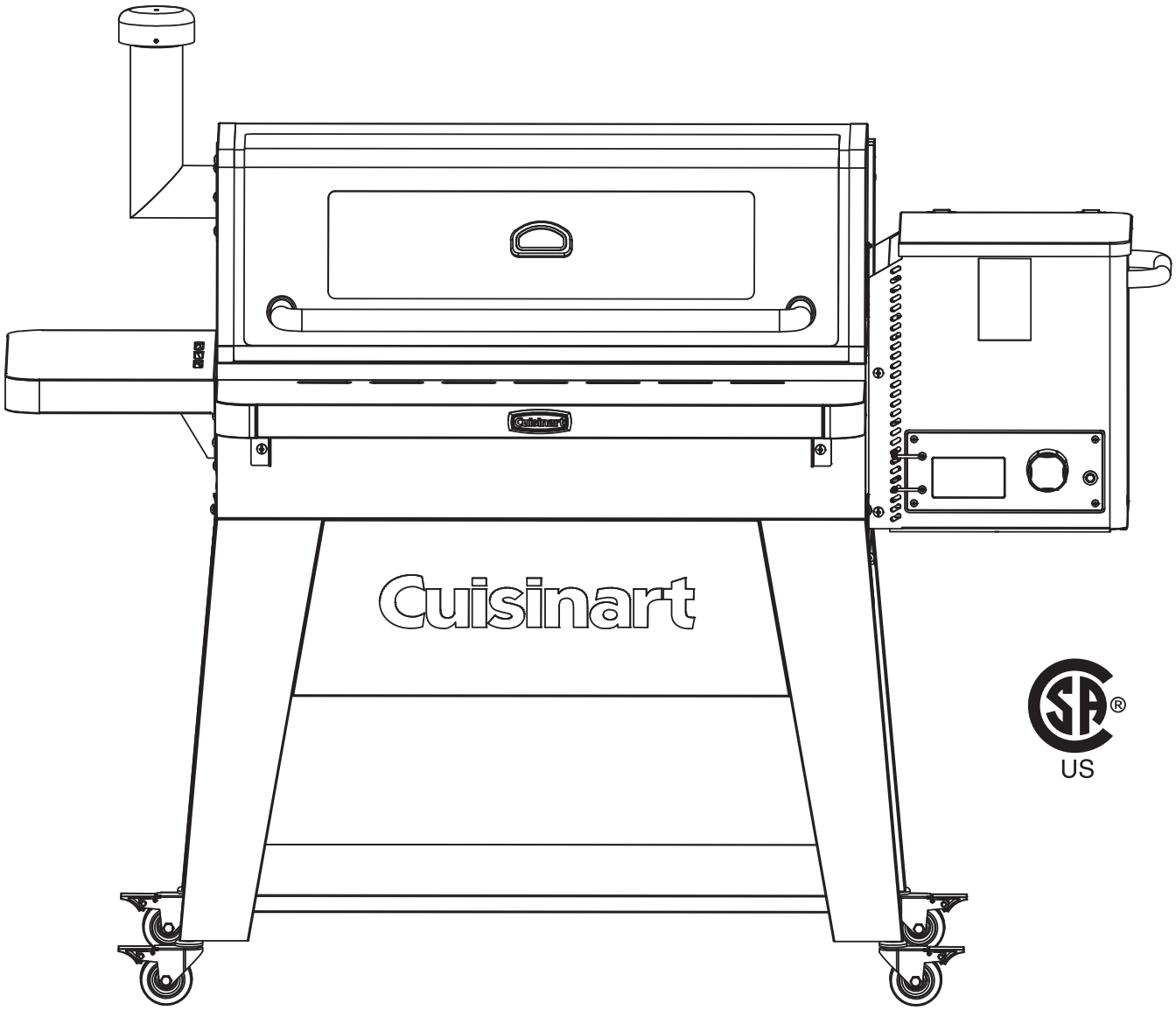

ASSEMBLY INSTRUCTIONS:

⚠ READ ALL SAFETY WARNINGS & ASSEMBLY INSTRUCTIONS CAREFULLY BEFORE ASSEMBLING OR OPERATING YOUR GRILL.

WE RECOMMEND TWO PEOPLE WORK TOGETHER WHEN ASSEMBLING THIS UNIT.

The following tools are required to assemble this Cuisinart Oakmont 3-in-1 Pellet Grill:

- **Phillips Screwdriver**
- **Pliers or Wrench**

PARTS LIST:

1	1	Side Table
2	1	Chimney
3	1	Hood Handle
4	1	Warming Rack
5	1	Rear Cart Brace
6	2	Right Table Brackets
7	2	Left Table Brackets
8	1	Grease Channel
9	1	Grill Body
10	1	Thermocouple Assembly
11	2	Side Cart Braces
12	1	Left Front Leg
13	1	Right Front Leg
14	1	Left Rear Leg
15	1	Right Rear Leg
16	1	Temperature Gauge Bezel
17	1	Temperature Gauge
18	4	Cooking Grates
19	1	Heat Plate Bracket
20	1	Hopper Lid
21	4	Casters
22	1	Heat Plate
23	1	Ash Clean-out Plate
24	1	Ash Clean-out Handle
25	1	Side Handle
26	1	Cart Base
27	1	Front Table
28	1	Pellet Hopper Assembly
29	1	Cord Wrap
30	1	Cart Front Panel
31	1	Grease Cup Bracket
32	2	Ash Cup Brackets
33	1	Heat Baffle
34	1	Grease Cup
35	1	Ash Cup
36	1	Control Knob

Note: Most hardware is pre-attached to the grill. You may need to loosen some screws partially while others may need to be removed in order to assemble parts. The screws that you remove will be re-used so don't misplace this hardware.

Extra screws are included in a small bag with the owners manual.

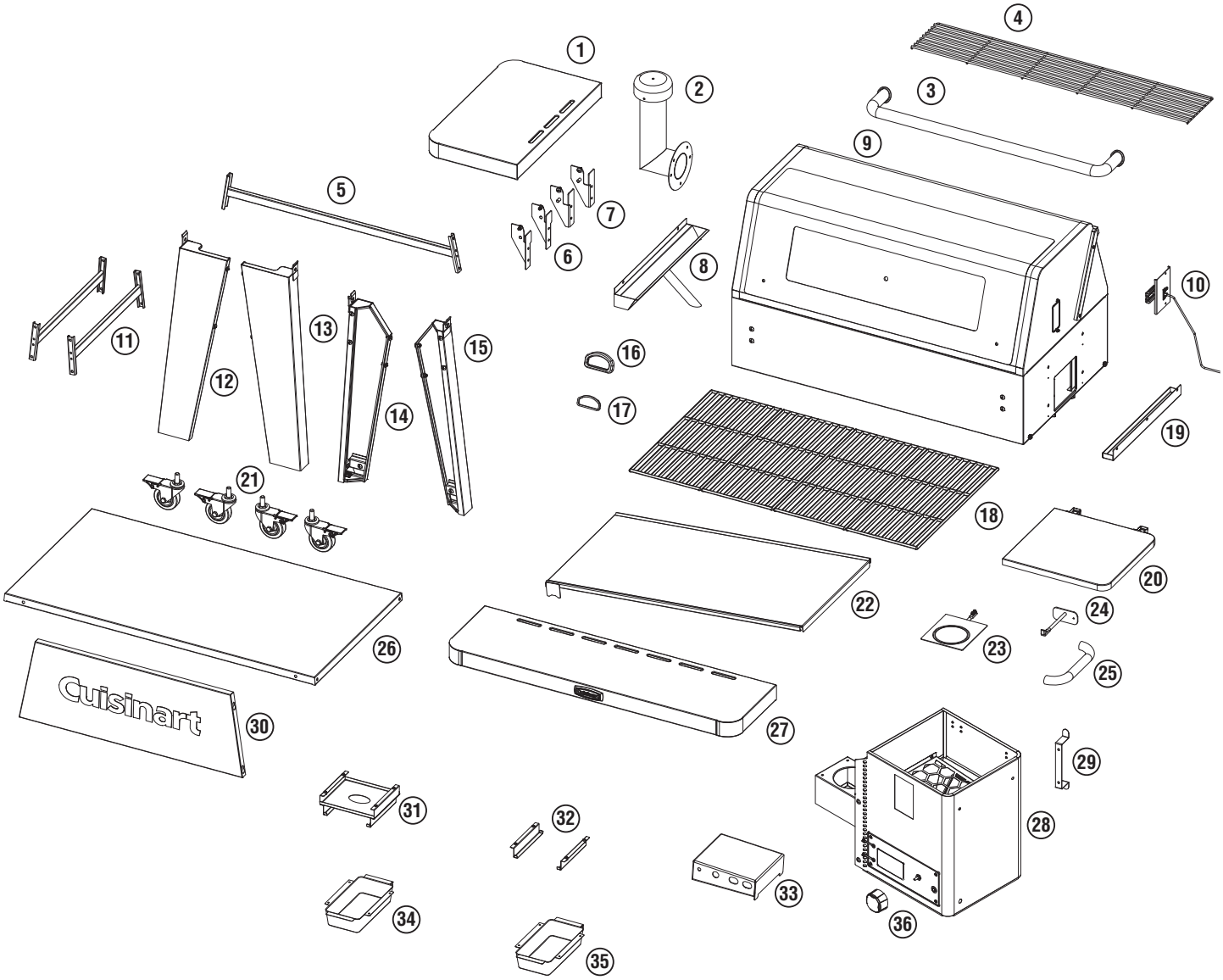
1
2
3
4
5
6
7
8
9
10
11
12
13
14
15
16
17
18
19
20
21
22
23
24
25
26
27
28
29
30
31
32
33
34
35
36
Cuisinart

Step 1

- Loosen 4 screws.
- Attach front legs ⓬ and ⓭ front panel ㉚ using keyholes.
- Tighten 4 screws.
- Remove 8 screws.

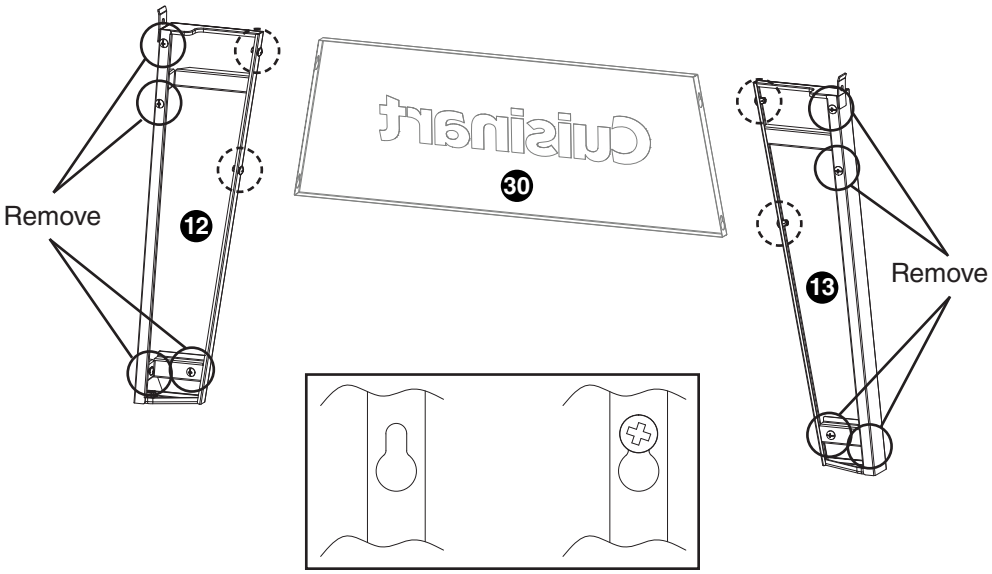

NOTE: Before tightening keyhole screws, make sure panels are aligned.

Step 2

- Attach side cart braces ⓫ to front legs ⓬ and ⓭ using 4 screws removed from Step 1.

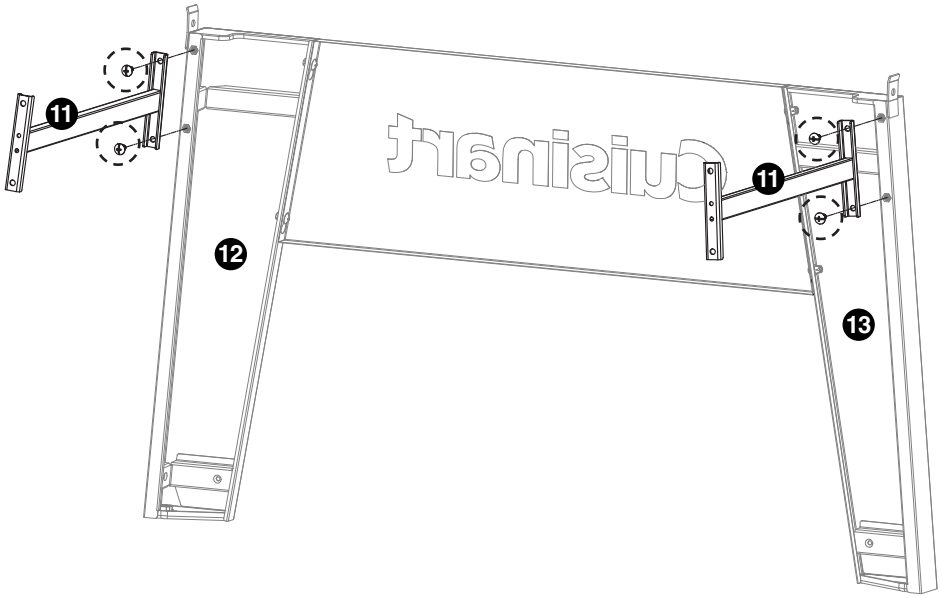

Step 3

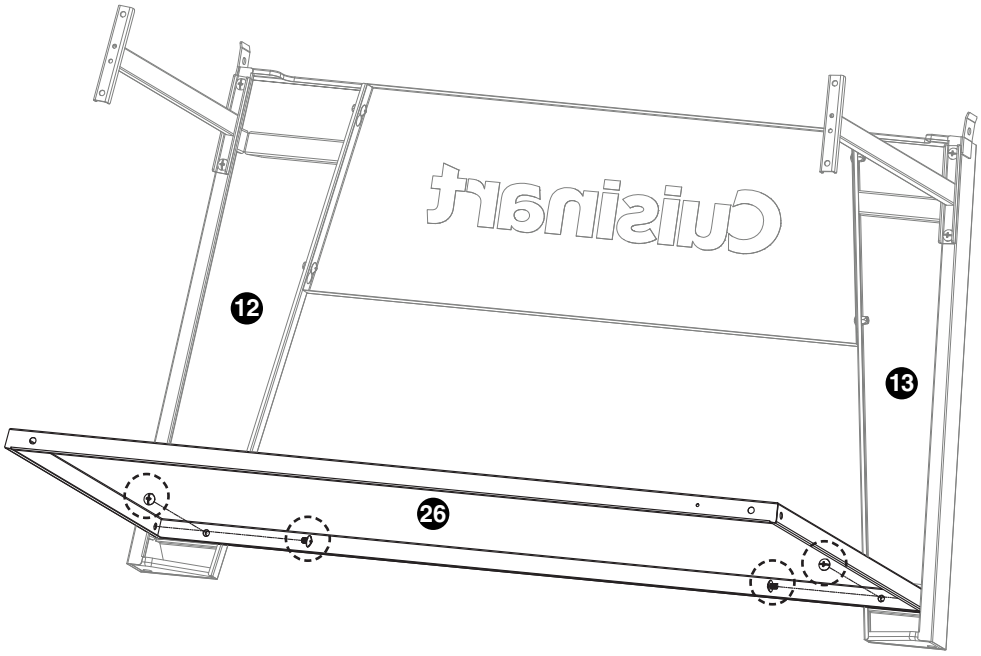

- Attach cart base 26 to front legs 12 and 13 using 4 screws removed from Step 1.

Step 4

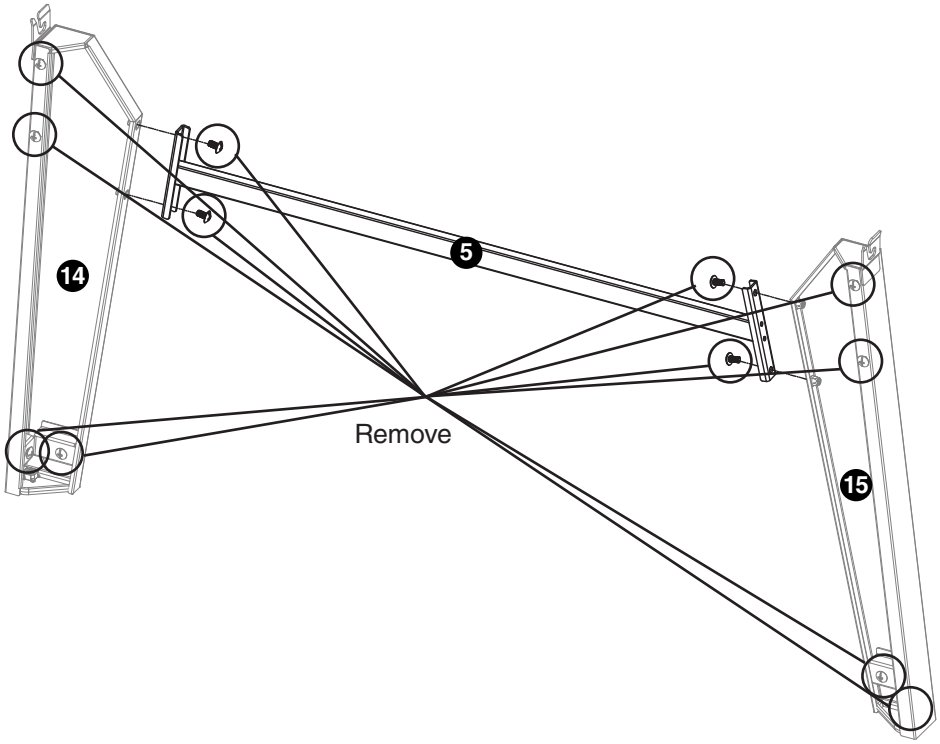

- Remove 12 screws.
- Attach rear cart brace 5 to rear legs(14 and 15) using 4 screws just removed.

Step 5

- Attach side cart braces ⓫ to rear legs (⓮ and ⓯) using 4 screws removed from Step 4.

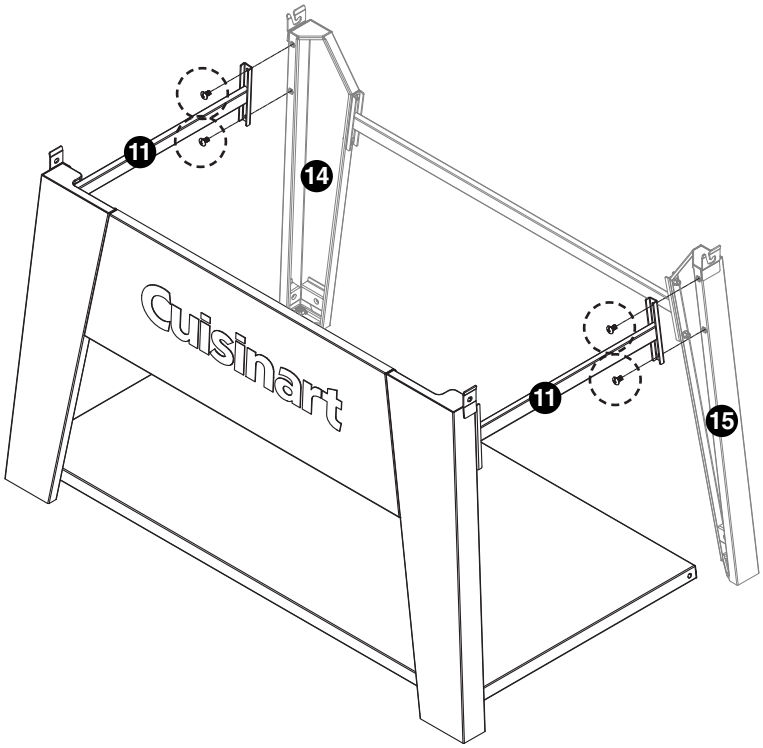

Step 6

- Attach cart base ㉖ to rear legs (⓮ and ⓯) using 4 screws removed from Step 4.
- Tighten all screws.

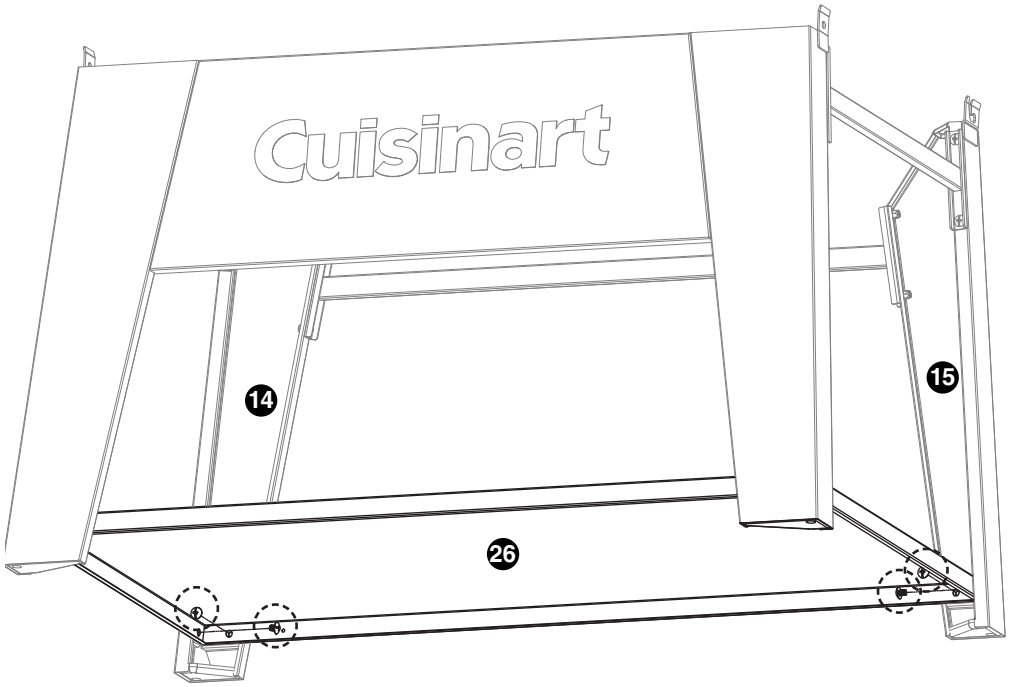

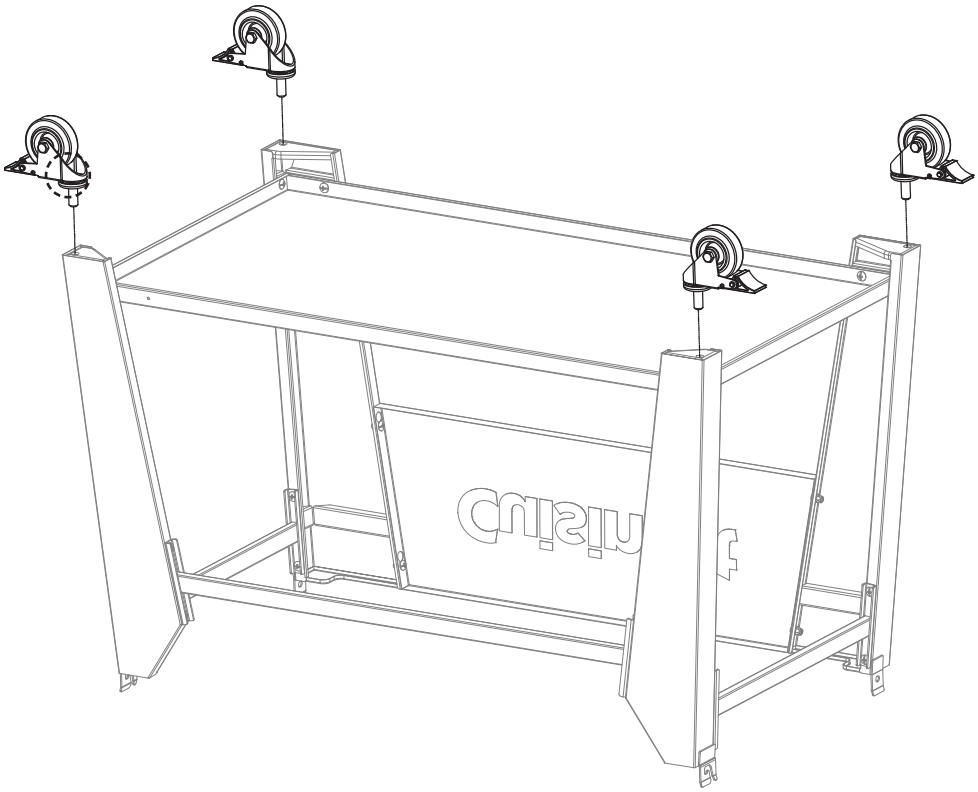

Step 7

- Lock casters ㉑.
- Attach casters ㉑ to legs.

㉑ CASTERS

unlocked

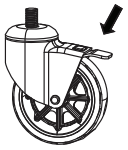

locked

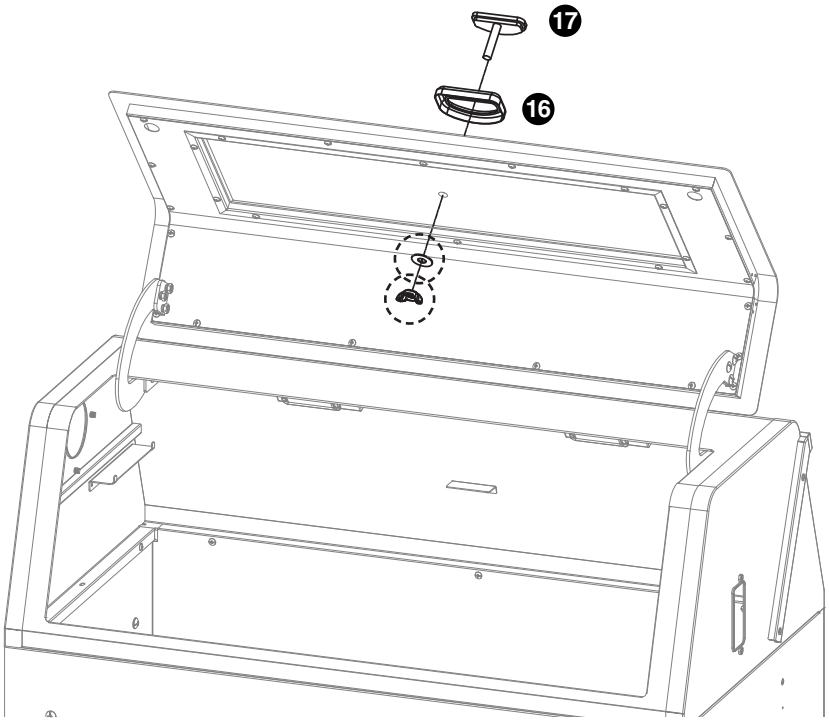

Step 8

- Attach temperature gauge ⑰ and bezel ⑯ to hood using pre-attached washer and wing nut.

Step 9

- Loosen 2 rear screws and remove 2 front screws on both sides of grill body ❾.
- Set grill body ❾ on cart. Make sure rear screws drop into cart brackets.
- Install front screws through front brackets.
- Tighten 4 screws.

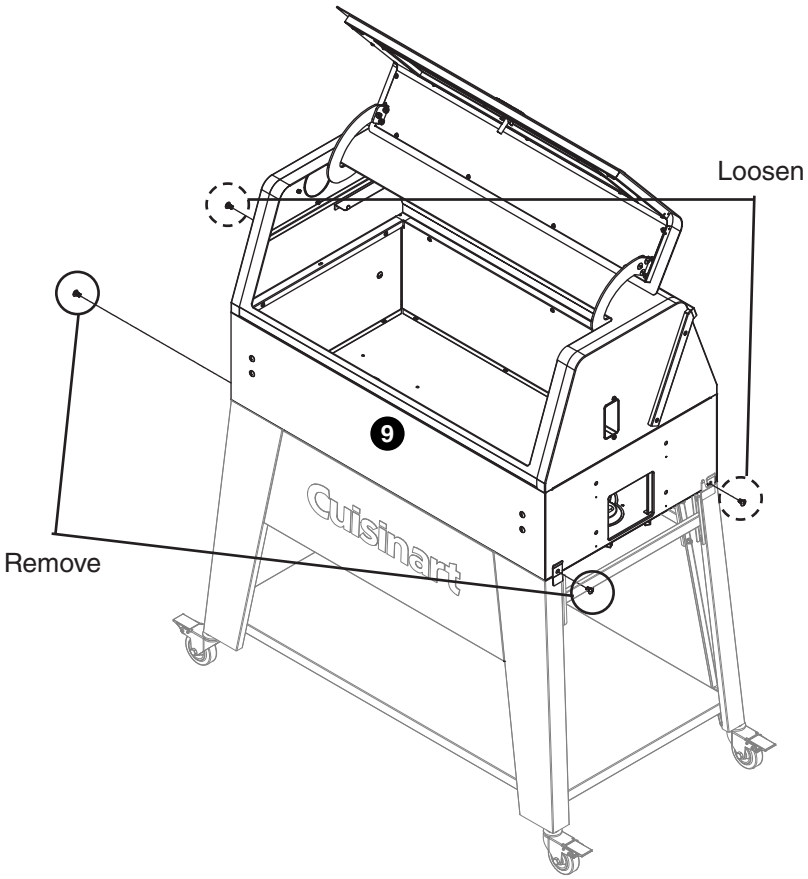

Step 10

- Remove 4 screws from grease cup bracket ㉛.
- Attach grease cup bracket ㉛ to bottom of firebox using 4 screws just removed.

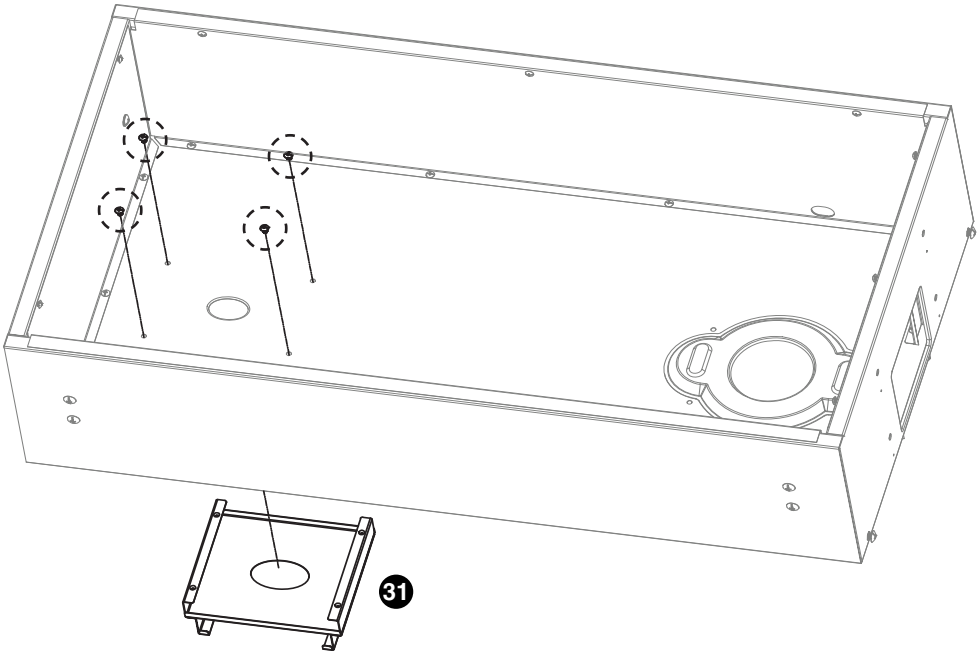

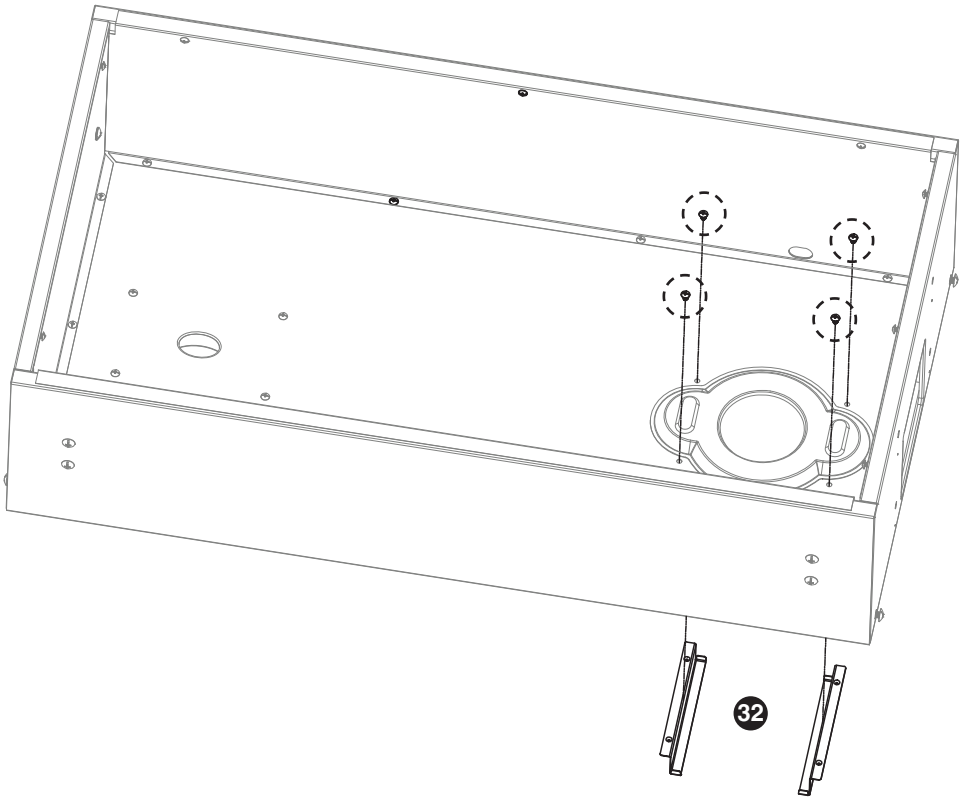

Step 11

- Remove 4 screws from ash cup brackets 32.
- Attach ash cup brackets 32 to bottom of firebox using 4 screws just removed.

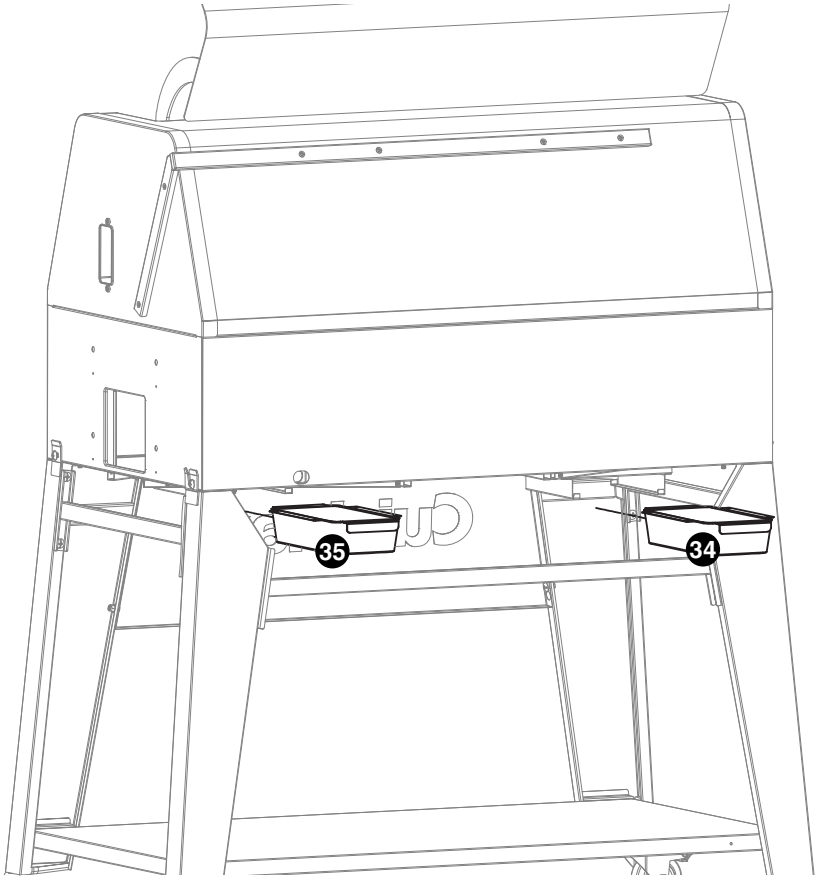

Step 12

- Install ash cup 35 and grease cup 34.

Step 13

- Remove 2 screws.
- Attach grease channel ❽.
- Tighten 2 screws.

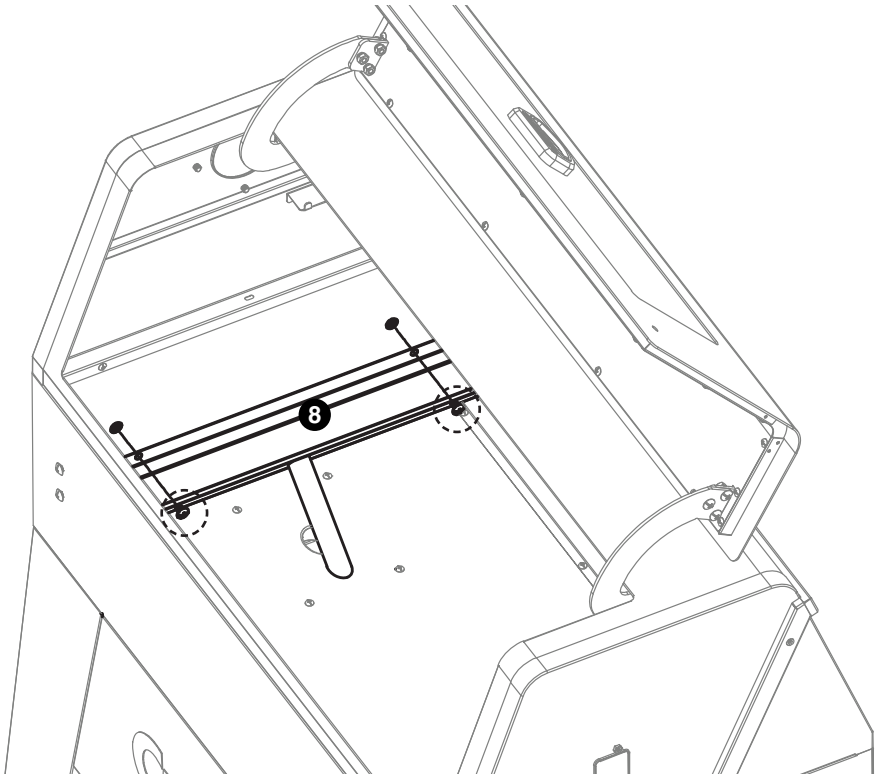

Step 14

- Attach control knob ㊱ to the controller located on the pellet hopper assembly ㉘.

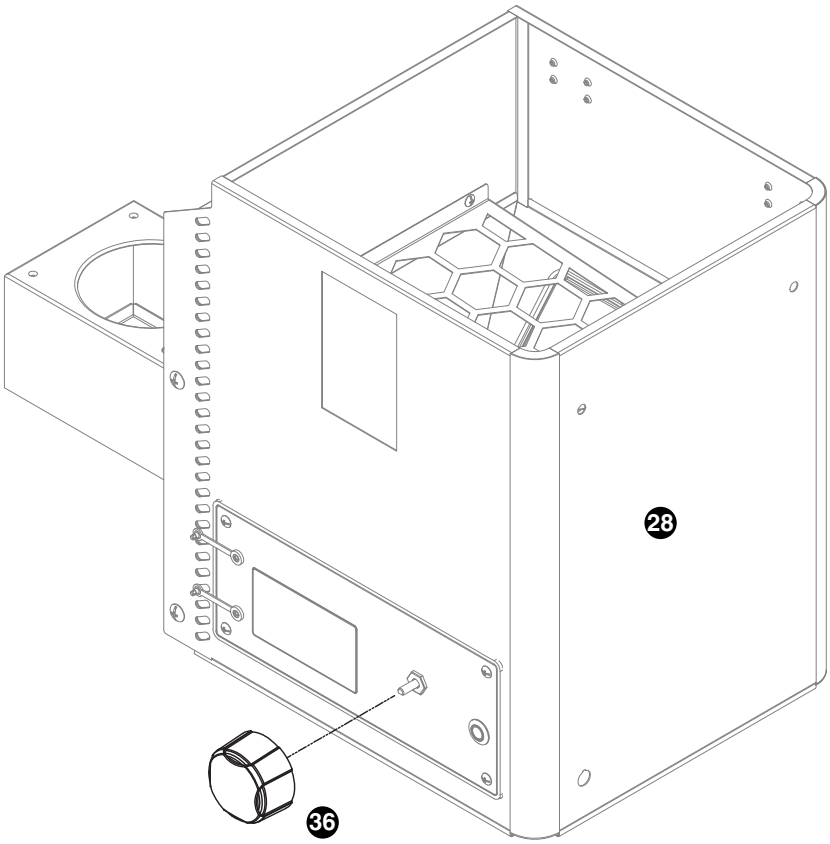

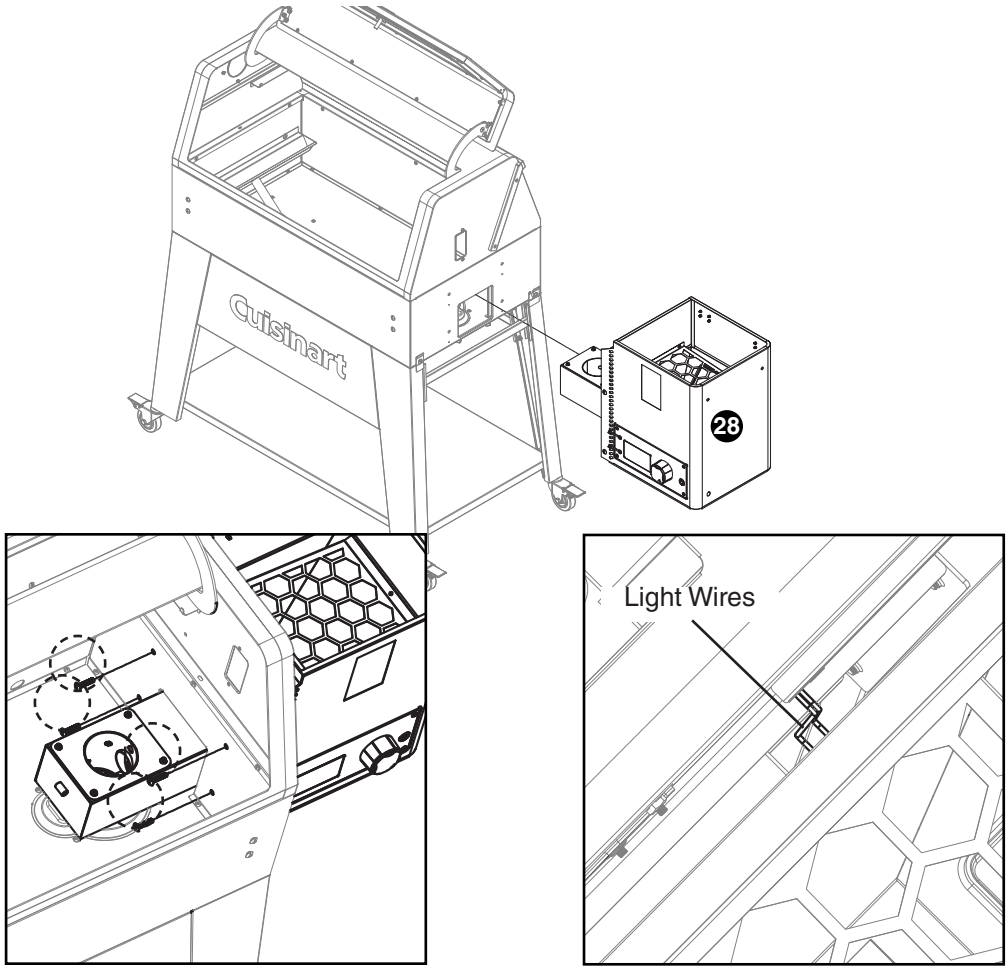

Step 15

- Install pellet hopper assembly ㉘ into grill body.
- Attach pellet hopper assembly ㉘ to grill body using 4 screws. (These screws are in the bag with the owner's manual.)
- Tighten 4 screws.

  Note: When assembling the pellet hopper to the grill, the light wires should be fed through the back side of the pellet hopper to ensure there is enough wire to connect during Step 29b.

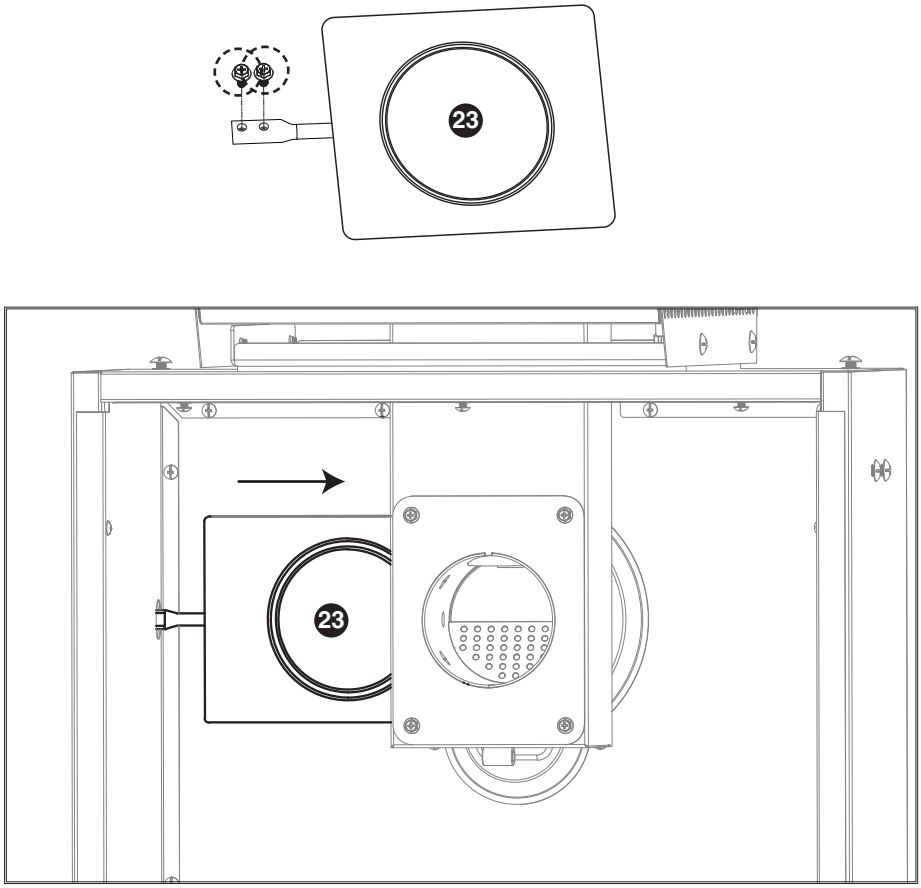

Step 16

- Remove 2 screws from ash clean-out plate ㉓ and set aside for later use.
- Slide ash clean-out plate ㉓ into bottom of auger housing.

Step 17

- Insert ash clean-out handle ㉔ through back of grill body.
- Attach ash clean-out handle ㉔ to ash clean-out panel ㉓ using 2 screws removed from Step 16.

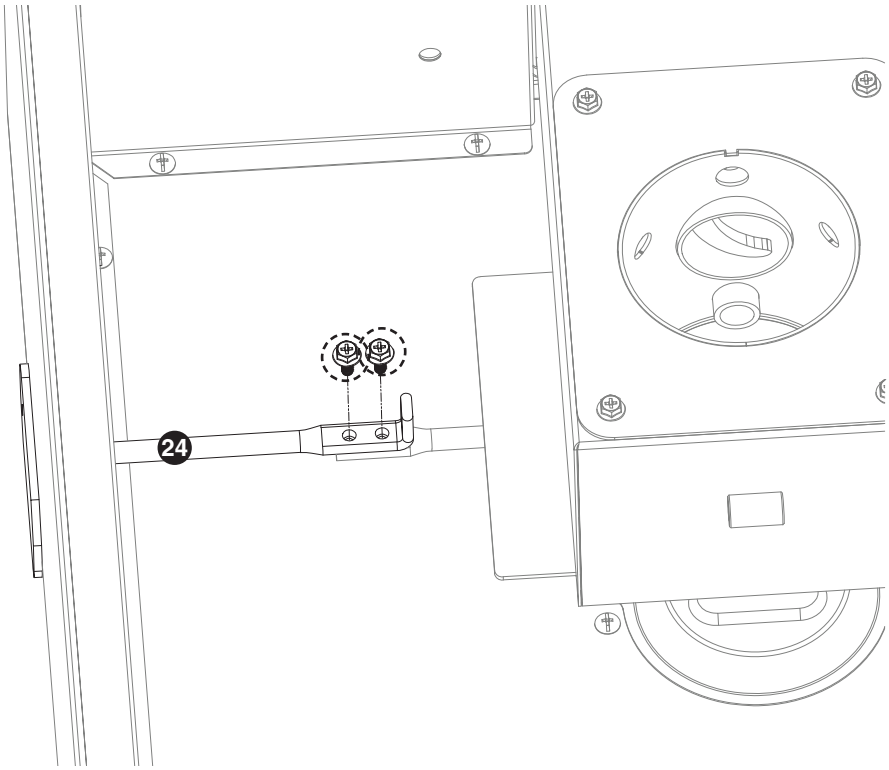

Step 18

- Remove 3 screws.
- Attach heat plate bracket ⑲ using 3 screws just removed.

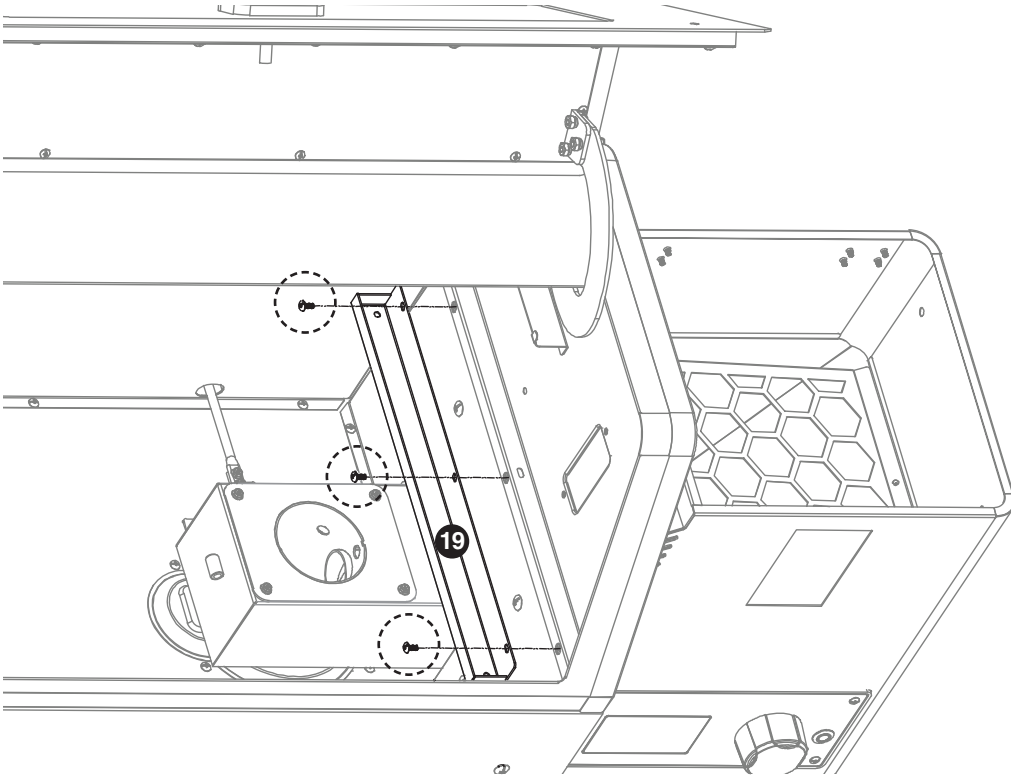

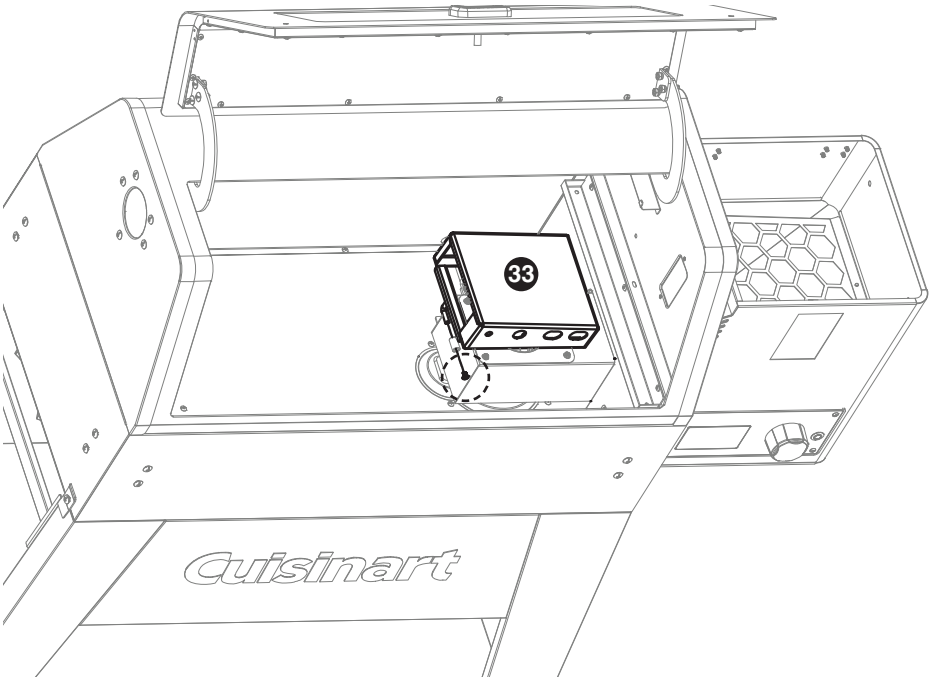

Step 19

- Remove 1 screw from heat baffle 33.
- Insert the heat baffle pin into auger box and tighten screw to hold in place.

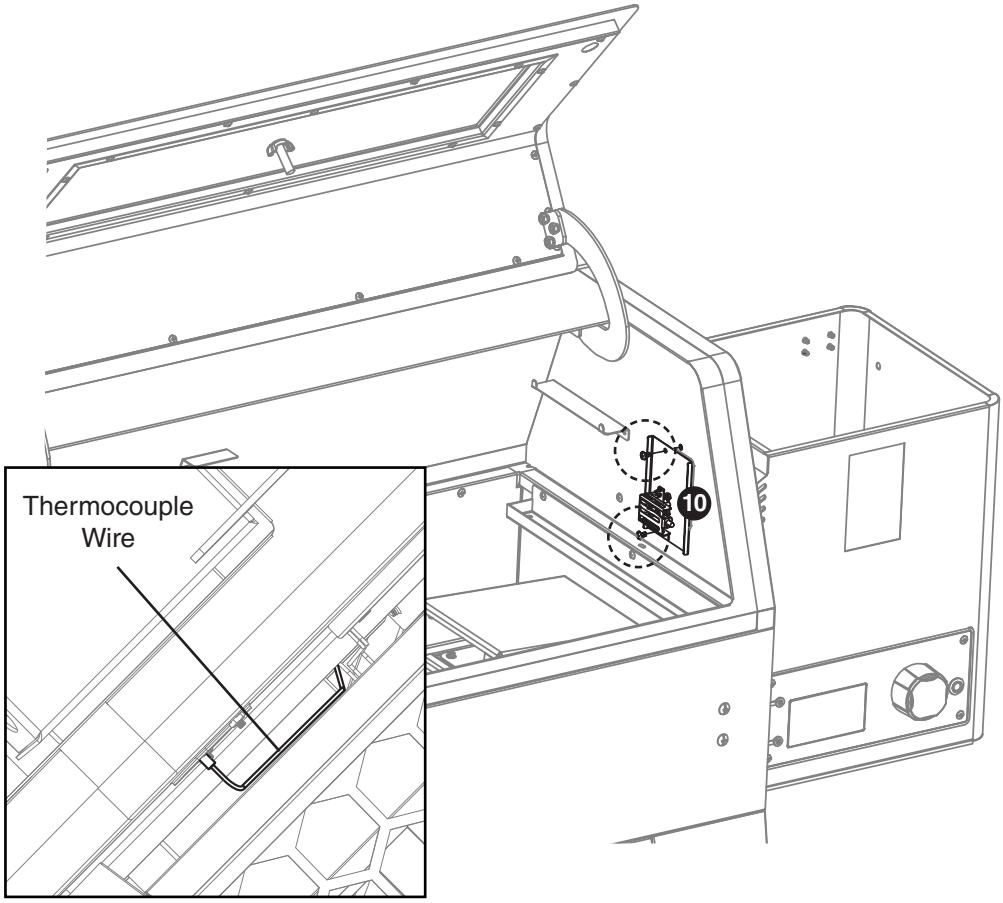

Step 20

- Remove 2 screws.
- Attach thermocouple assembly 10 using 2 screws just removed.

  Note: Make sure to feed the thermocouple wire on the back side of the auger box to ensure there is enough wire to connect during Step 29b.

Step 21

- Attach side handle ㉕ using 2 pre-attached screws from side handle.

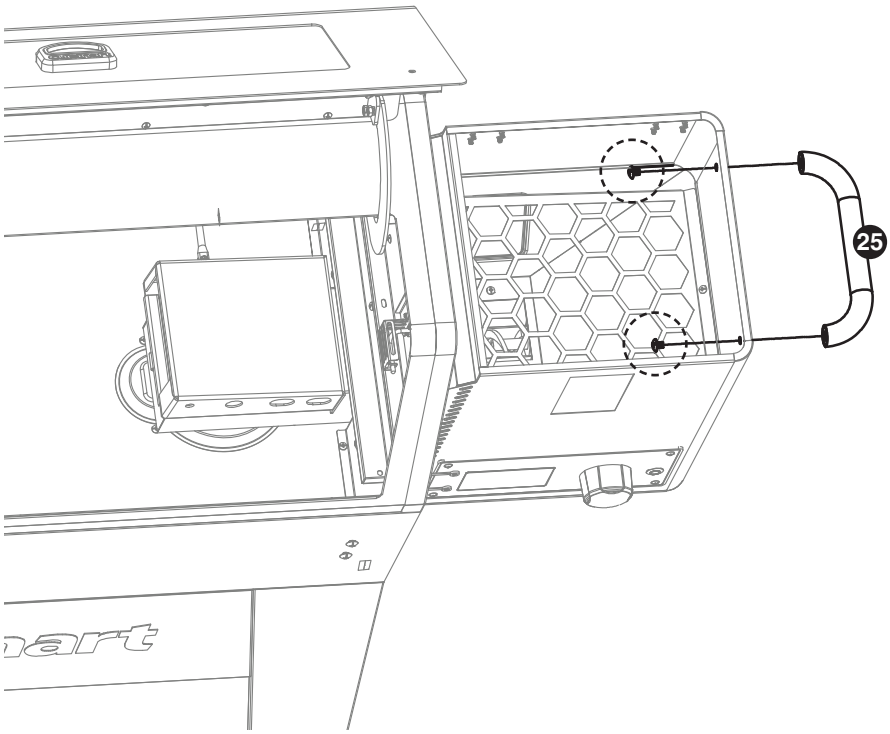

Step 22

- Remove 8 screws.
- Attach hopper lid ⑳ to pellet hopper body using 8 screws just removed.

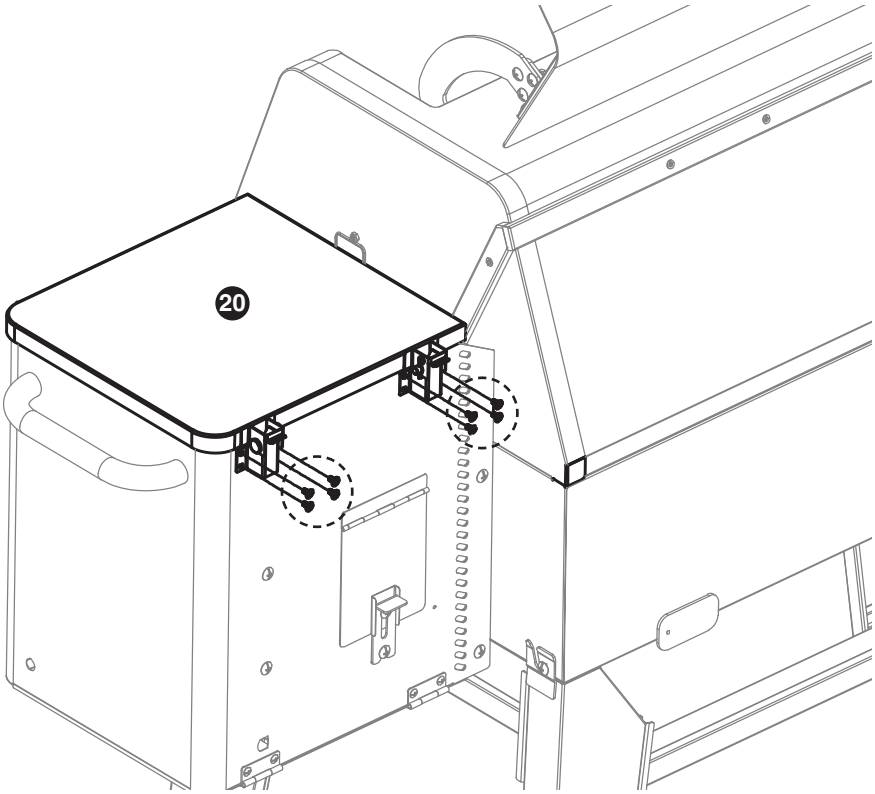

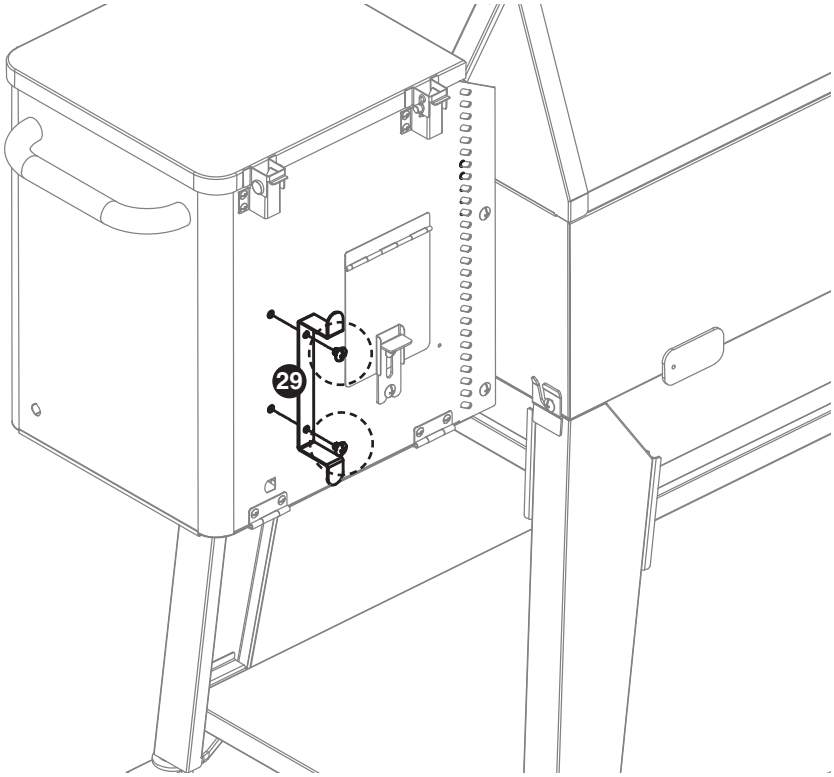

Step 23

- Remove 2 screws.
- Attach cord wrap 29 using 2 screws just removed.

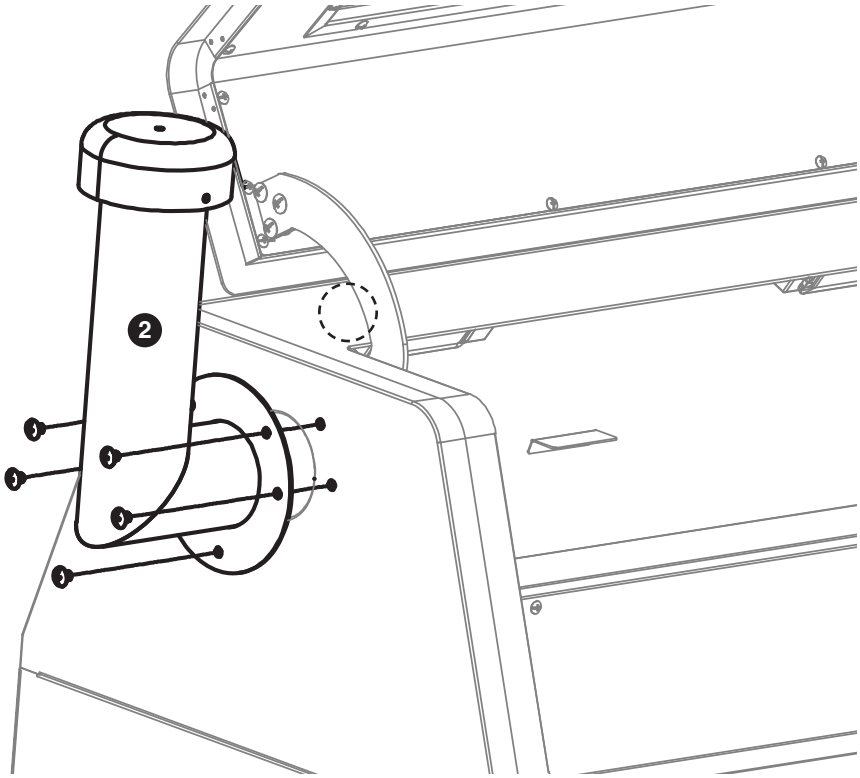

Step 24

- Remove 5 screws.
- Attach chimney 2 using 5 screws just removed.

Step 25

- Install hood handle ❸ using screws and bezels pre-installed on handle.

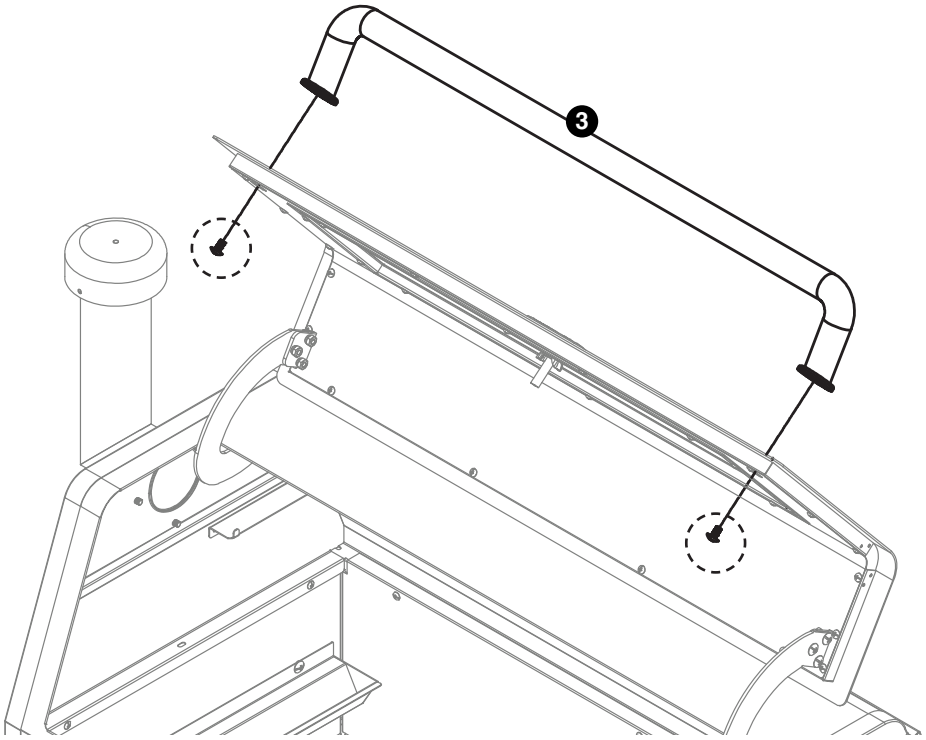

Step 26

- Remove 4 shoulder bolts from left and right table brackets ❼ and ❻.
- Attach left and right table brackets ❼ and ❻ to side table ❶ and front table ㉗ using shoulder bolts just removed.

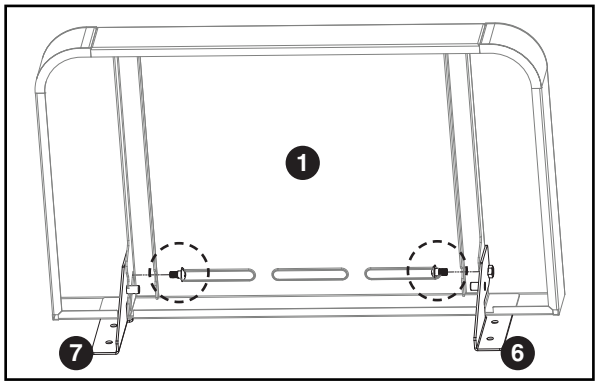

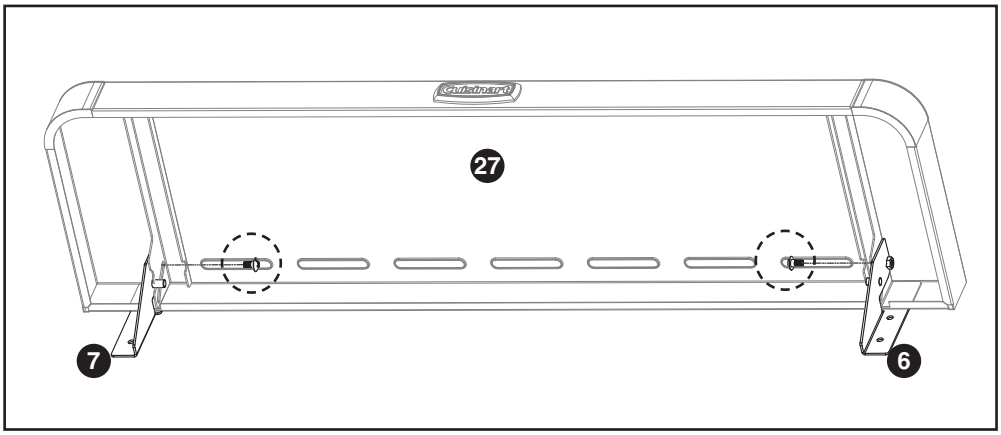

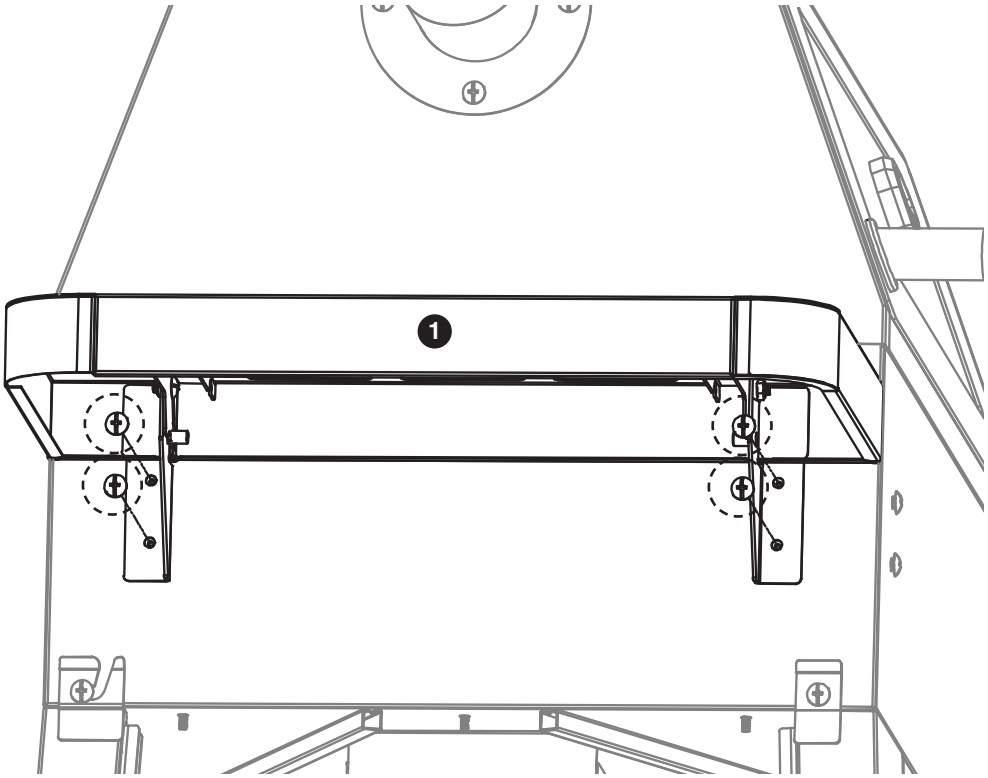

Step 27

- Remove 4 screws from grill body.
- Attach side table ❶ to grill body using 4 screws just removed.

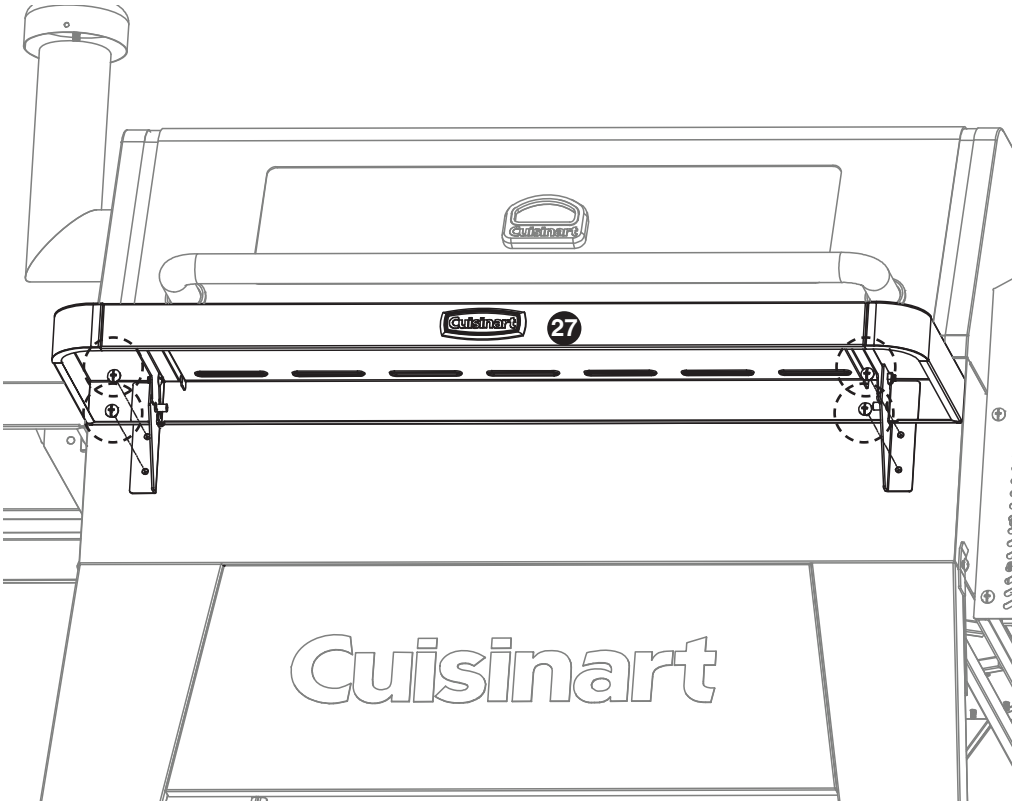

Step 28

- Remove 4 screws from grill body.
- Attach front table ㉗ using 4 screws just removed.

Step 29a

- Remove 1 screw from the bottom of pellet hopper panel.

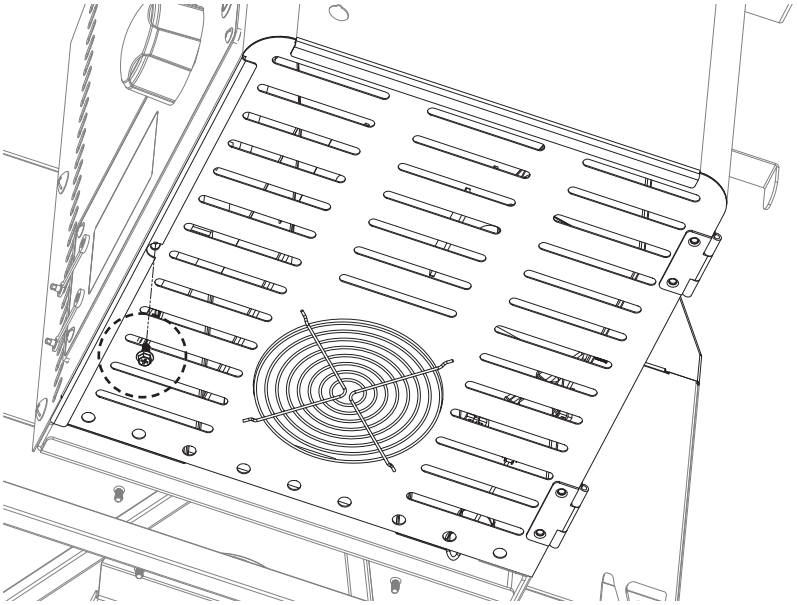

Step 29b

- Connect the thermocouple connector and the two 10 watt light connectors. These wires can only be connected one way.

  Note: All connectors must be connected in order for the grill to function properly.

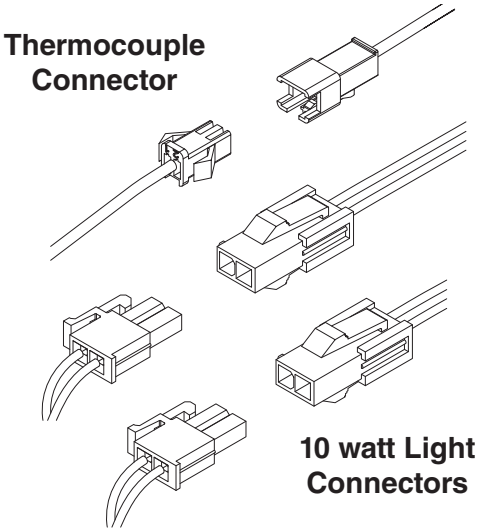

Step 29c

- Close pellet hopper bottom panel and secure with screw.

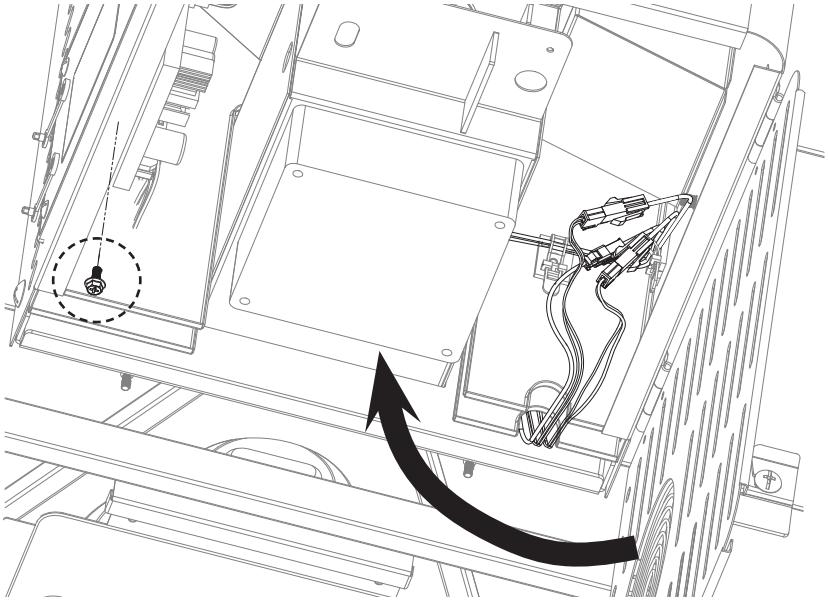

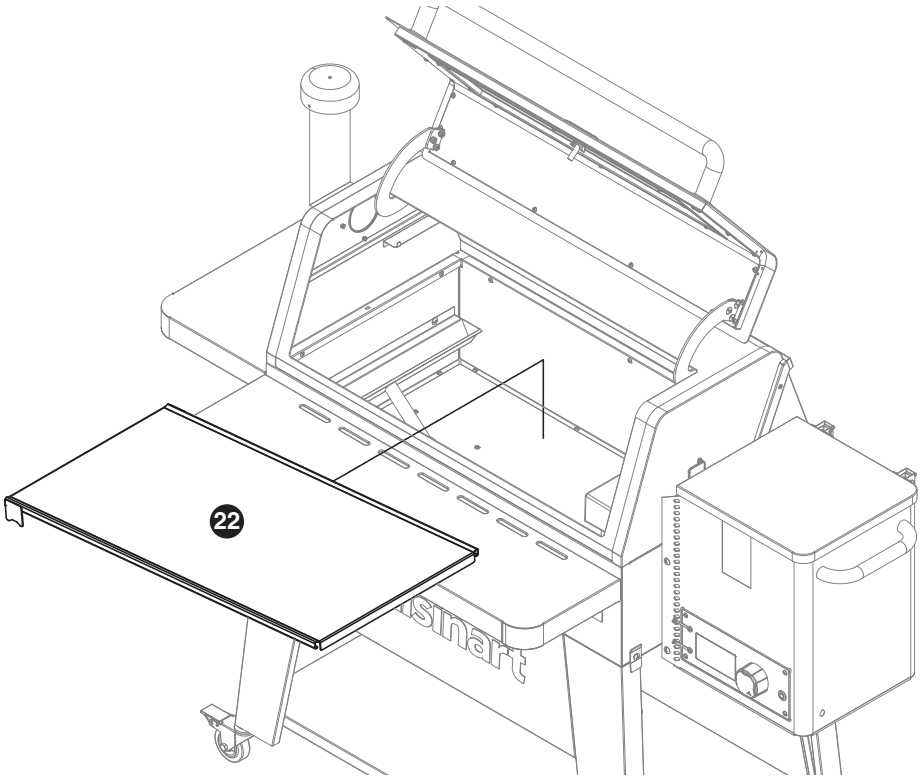

Step 30

- Place heat plate 22 inside cooking chamber on brackets.

  Note: The heat plate should set in the grease channel and the heat plate bracket. Once installed the heat plate will slope down to the left to ensure grease flows into the grease cup.

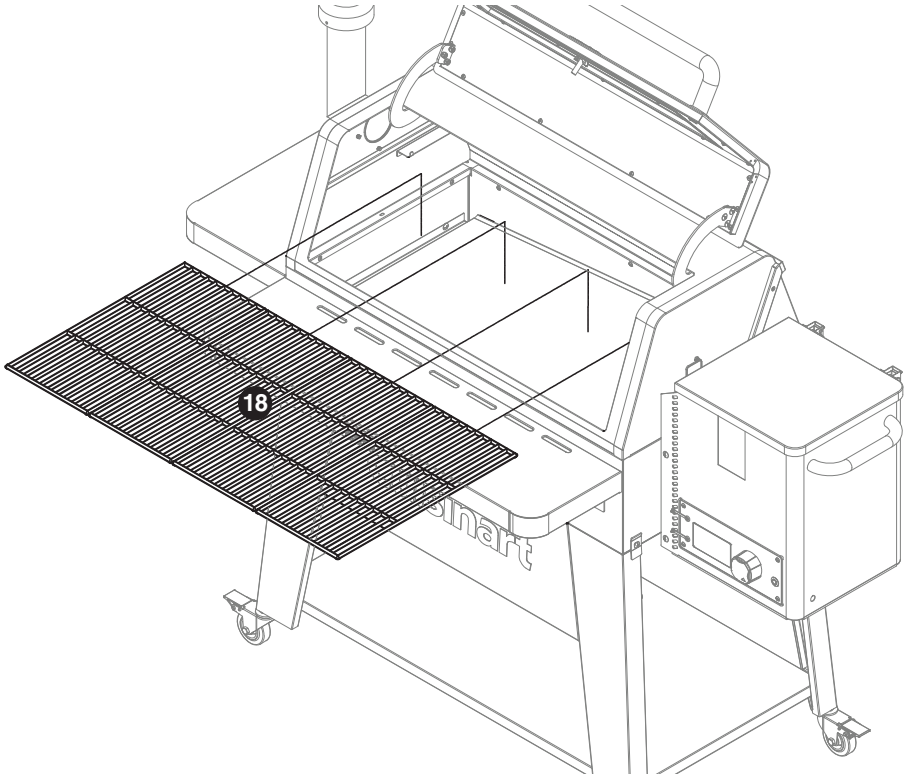

Step 31

- Place 4 cooking grates 18 inside cooking chamber.

Step 33

- Place the warming rack ❹ on supports inside cooking chamber.

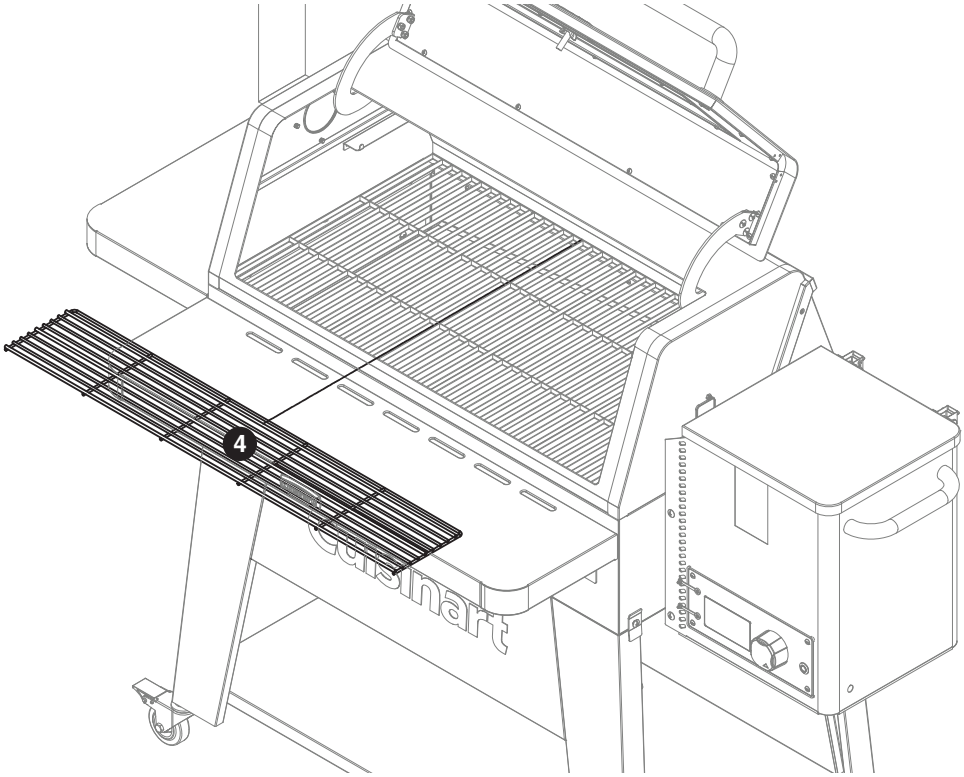

Model SMK2036AS Assembled

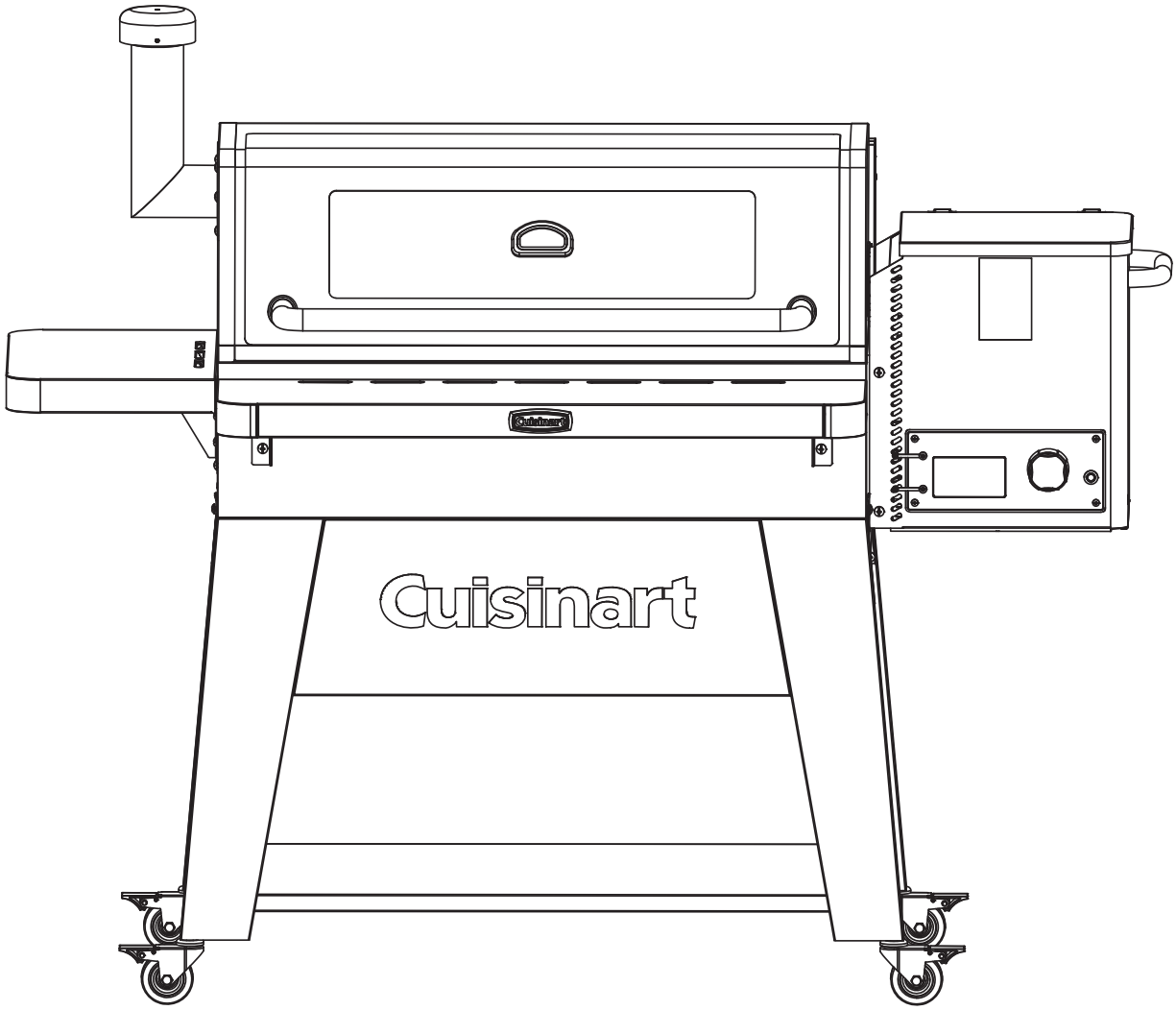

©2021 The Boltz Group LLC.
Carrollton, Texas 75006 U.S.A.