Neat Bar & Neat Pad

Generation 2

neat.

User Manual

Neat Bar
Video conferencing device

Neat Bar is a compact and highly capable meeting room device.

It's perfect for bringing superior-quality audio and video to your huddle, focus, and meeting spaces for up to ten people.

Neat Bar includes a camera system, speakers, microphones and environmental sensors in one compact design and comes with a dedicated Neat Pad controller.

Neat Bar also has a USB-C port for optional single cable connection to your PC.

Simple setup

All you need is in the box, including mounts, cables and clear instructions. So it's easy to install and set up, above or below one or two screens (screen mount sold separately).

Wall mount

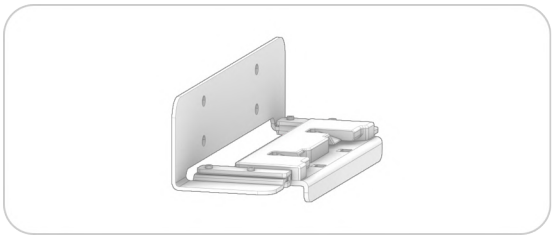

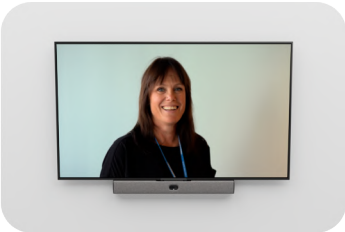

Screen mount Sold separately

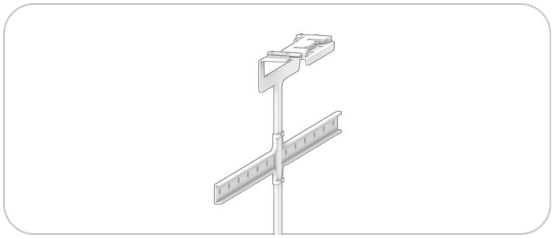

Table stand

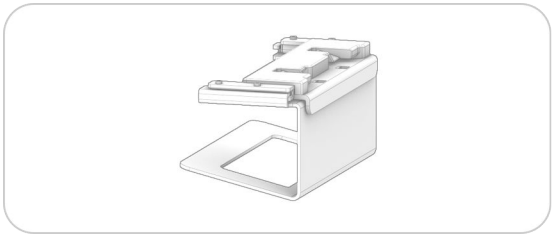

Snap-on mount

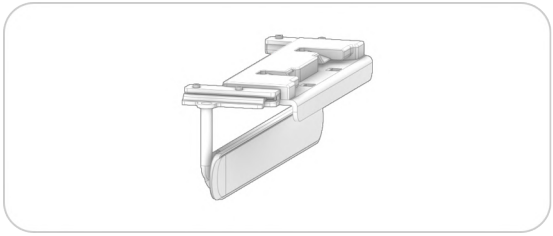

Neat Bar

Neat Bar comes with everything you need to get started, including cables, wall mount, table stand and snap-on mount.

In the box

Neat Bar: Video conferencing device
HDMI cable: 6.5ft (2m)
Ethernet cable: 9.8ft (3m)
Power cord: 9.8ft (3m)
Mount adapter, wall mount, table stand and snap-on mount
Screen mount sold separately

4 × M8 screw (0.94 in / 24 mm) for VESA mount
4 × M6 screw (0.94 in / 24 mm) for VESA mount
2 × spacer (to secure parallel TV mount)
1 × 5 mm hex key for the screen mount
1 × 2 mm hex key for the mount adapter

1 additional screw bag for dual screen setup
4 × M8 screw (0.94 in / 24 mm) for VESA mount
4 × M6 screw (0.94 in / 24 mm) for VESA mount
4 × spacer (to secure alignment of all screens)

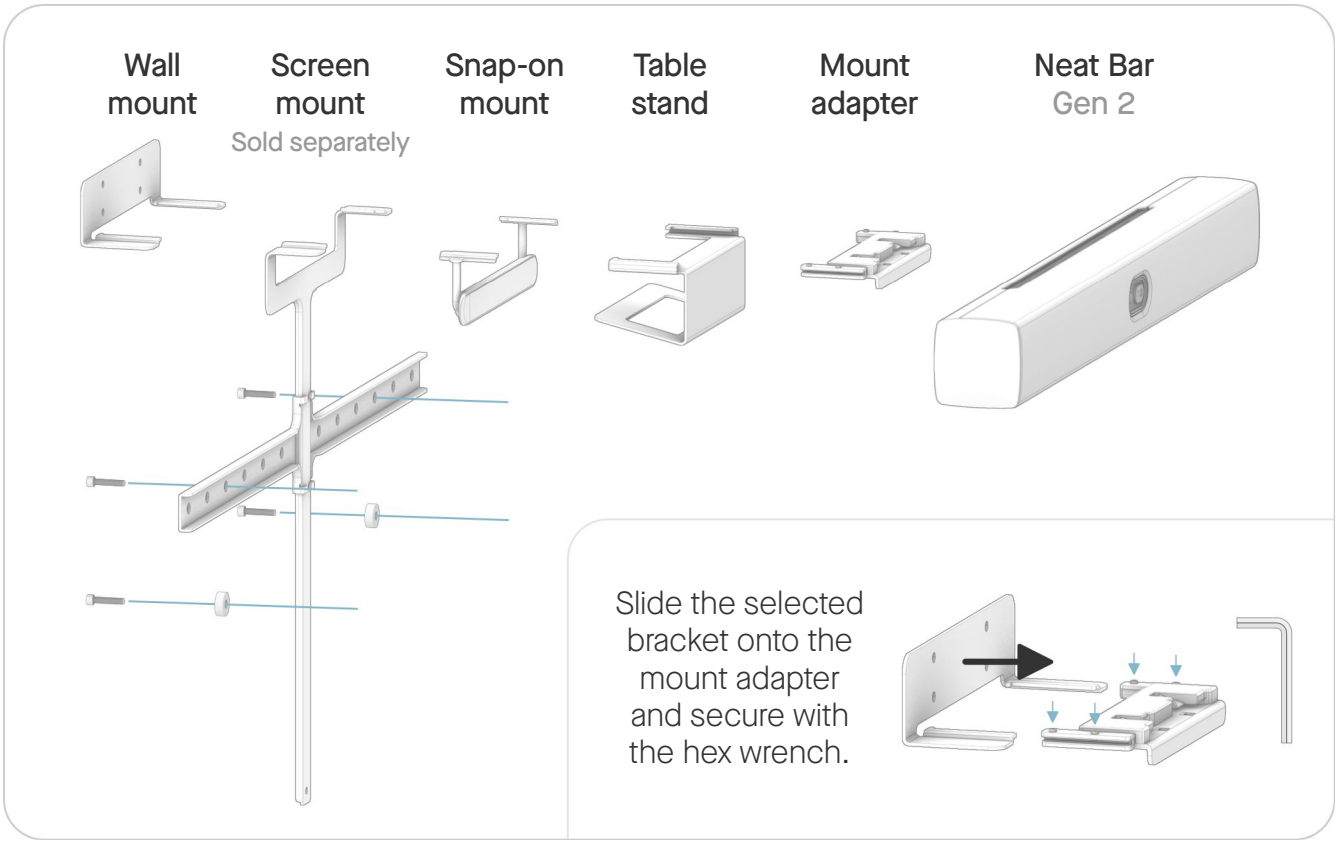

Screws for mounting to the wall are not included. Mounting on a wall should only be performed by qualified personnel in line with applicable facility and state regulations. The wall and the mounting equipment must safely withstand the load of the product.

Neat Pad

Neat Pad works as a Controller for Neat Bar and can also be configured as a Scheduling Display for the Meeting Room. It comes with everything you need to get started, including cables and mounting options.

In the box

Neat Pad: 8-inch touch screen
2 × Ethernet cable: 9.8ft (3m) + 16.4ft (5m)
PoE power adapter
Mount adapter, side mount and wall mount
Glass mount sold separately

4 × M4 screw (0.30 in / 7.5 mm) for the mount adapter
3 × M4 screw (0.19 in / 4.7 mm) for the side mount
1 × 2.5 mm hex key for the mounts
1 × 2 mm hex key to secure Neat Pad to the wall mount

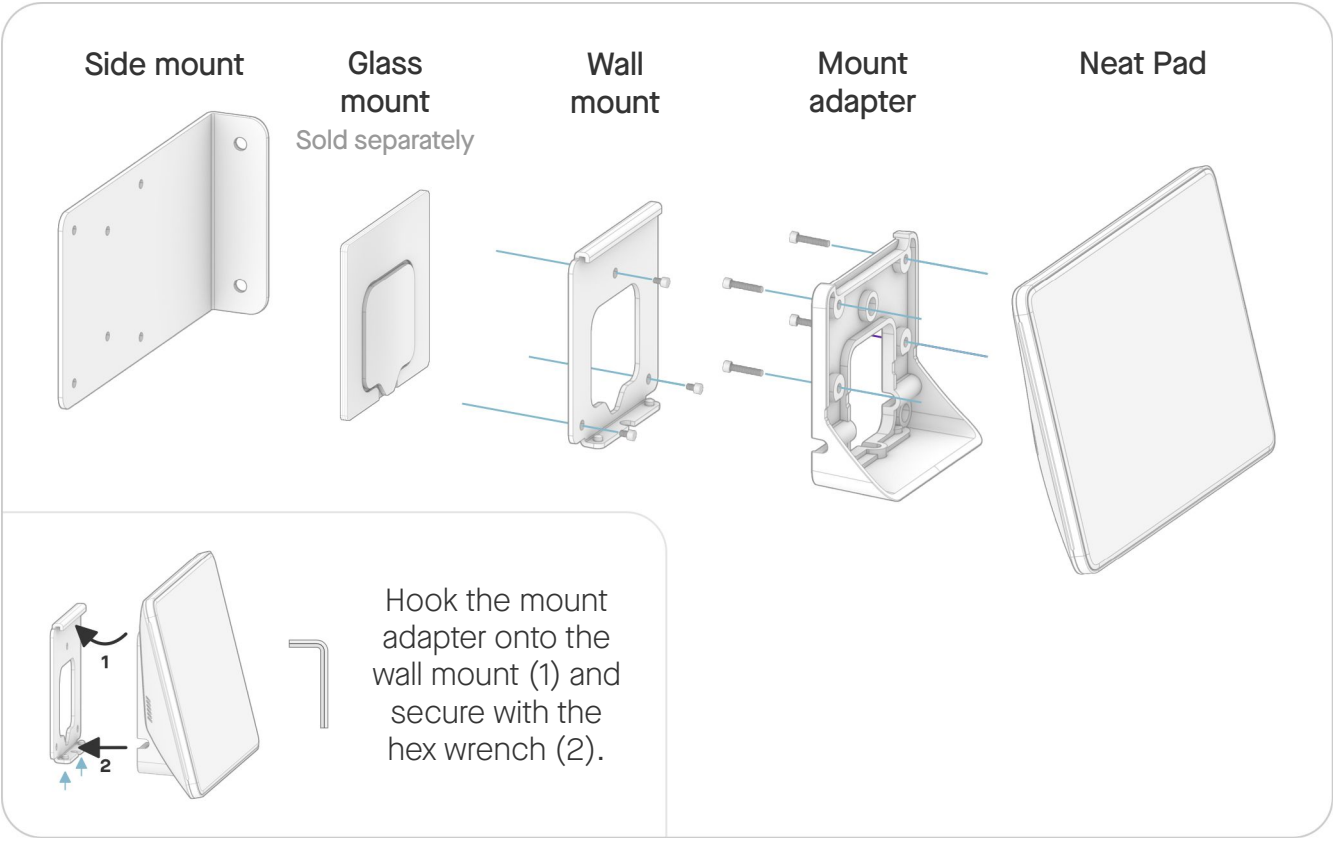

Screws for mounting to the wall are not included. Mounting on a wall should only be performed by qualified personnel in line with applicable facility and state regulations. The wall and the mounting equipment must safely withstand the load of the product. Glass mount must be mounted less than 6,56 ft (2 m) above floor.

Mounting & releasing

Mounting

Slide Neat Bar onto the selected mounting option (1). When fully inserted tilt Neat Bar back to horizontal and check if it is secure by carefully pulling it towards you.

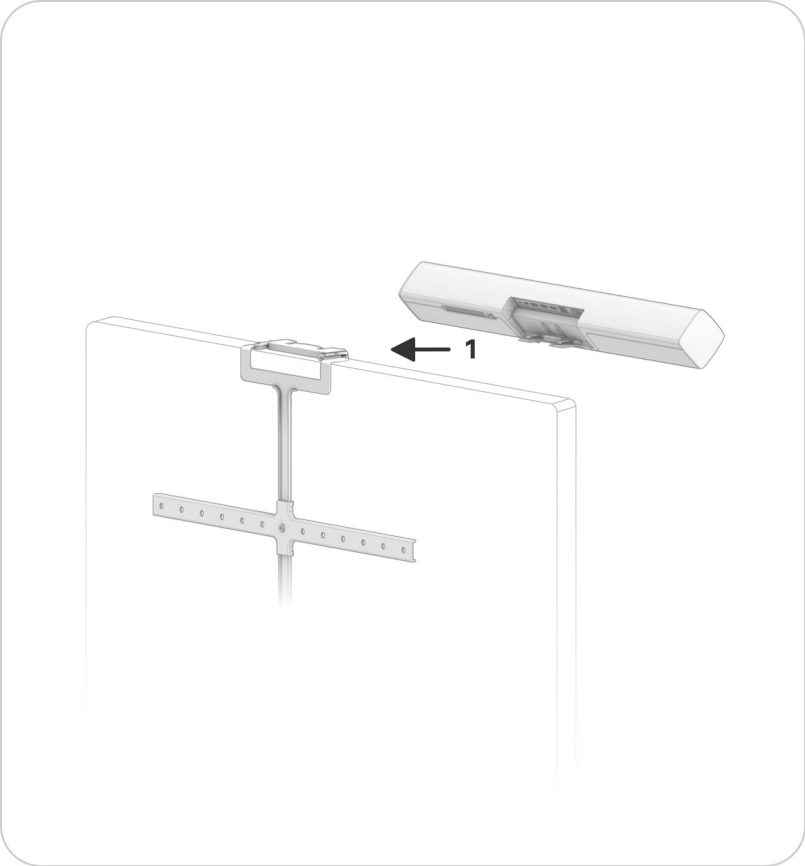

Releasing

Tilt Neat Bar fully forward (1). Pull towards you (2) until the unit stops and the red release lever appears (3). Push the release lever up and pull Neat Bar gently off the mount adapter.

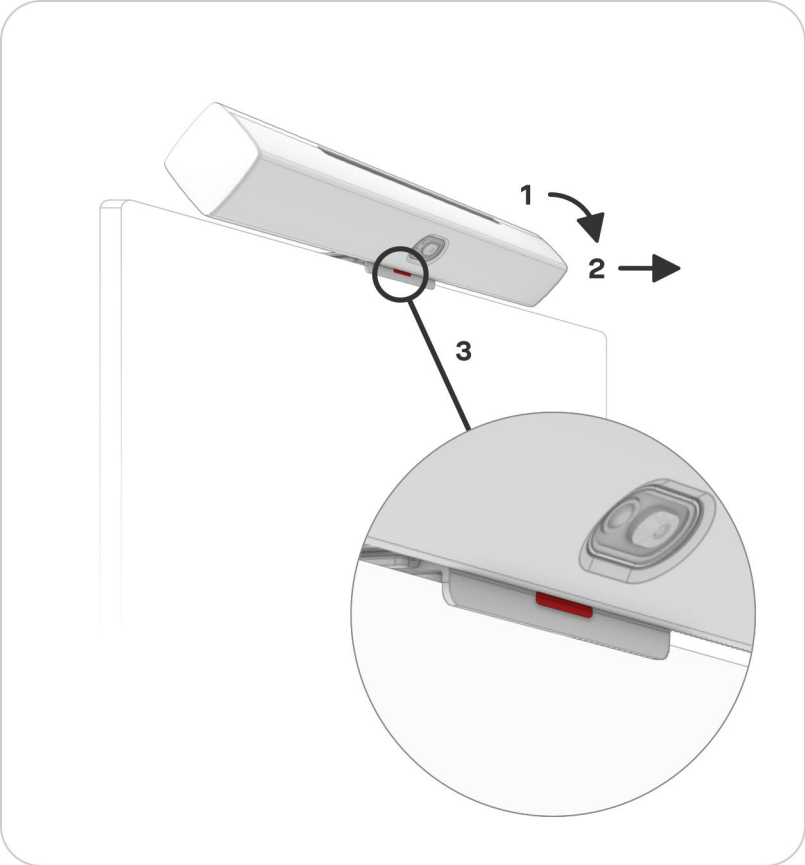

Size & weight

Neat Bar Gen 2

Width: 25.59 in (650 mm)
Height: 2.76 in (70 mm)

Depth: 2.76 in (70 mm)
Weight: 3.44 pounds (1,56 kg)

Neat Pad

Width: 7.8 in (198 mm)
Height: 1.7 in (42 mm)

Depth: 5 in (127 mm)
Weight: 1.15 pounds (520 g)

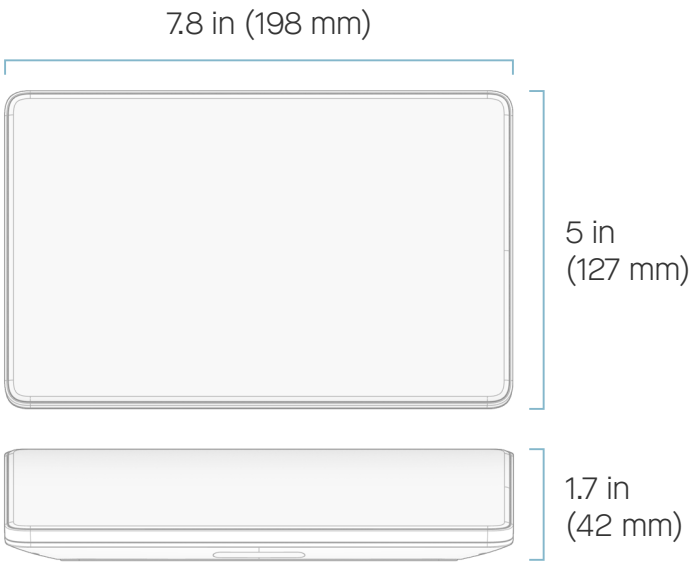

Setup & connectivity

Setup

Use the provided cables to set up Neat Bar. Connect the cables according to the illustration. Cables marked —— are included. Cables marked - - - - are optional and not required for basic use of the system.

Requirements for a complete setup

Display
Internet connection
Video service

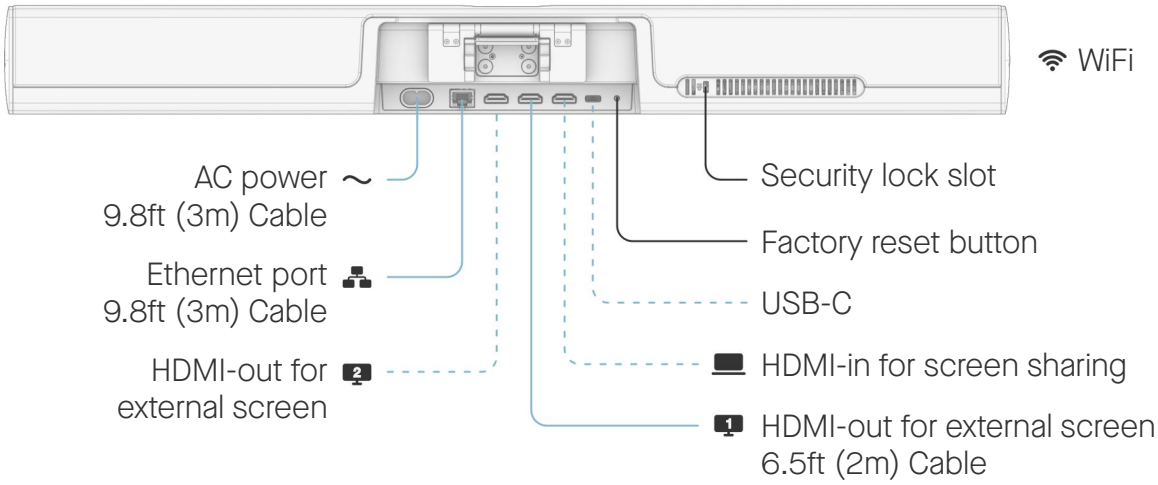

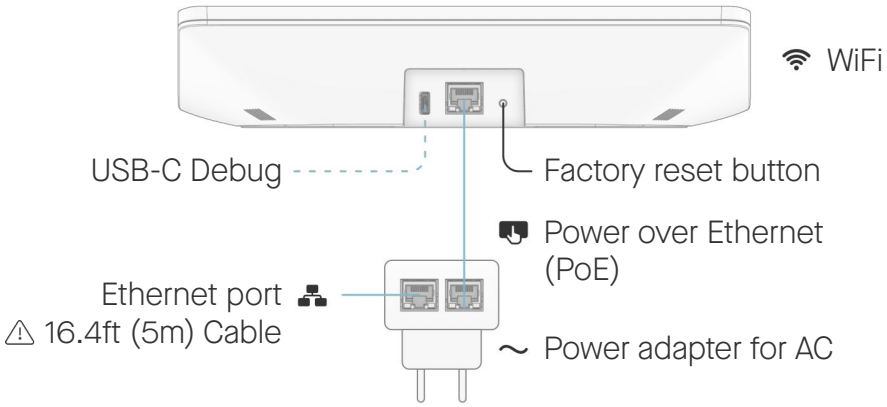

The 16.4ft (5m) Ethernet Cable provided is not to be used for in-wall installation. In-wall cable routing should only be performed by qualified personnel using appropriate equipment.

Environmental Requirements

Ambient operating temperature:
32° to 95° F (0° - 35° C)
Storage temperature: -4° - 140° F (-20° - 60° C)
Relative humidity: 10% to 90%

Additional Product Information

https://neat.no/bar-2