User's Manual

(YH-300-1B)

Improper use can damage the product and even cause injury. Please read this manual carefully and use it correctly. Save the manual.

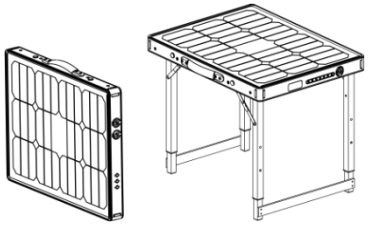

& Specifications

Model NO.	YH-300A-1B
Size (LxWxH-mm)	720×550×550（Height Adjustable）
PV Power	55 W
Battery Capacity	192 WH
Blue Tooth	☑
Speakers	10W
Radio	☑
Car cigarette lighter	12V 8A
USB	5V1A,5V2.1A×1
DC	12V 5A×2
USB-PD（45W）	☑
QC3.0（18W）	☑
PV Output Port	18V
QI Wireless Charger	☑
Wireless Table Lamp	☑
Built-in light	☑
150W Inverter	Optional
Car Charger	☑
adapter	☑
Tactical Backpack	Optional

& Schematic of each part

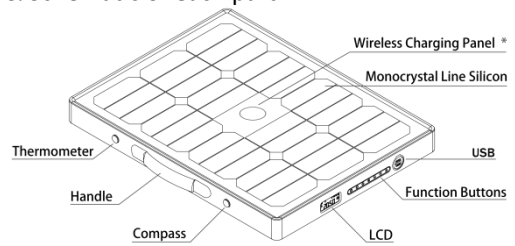

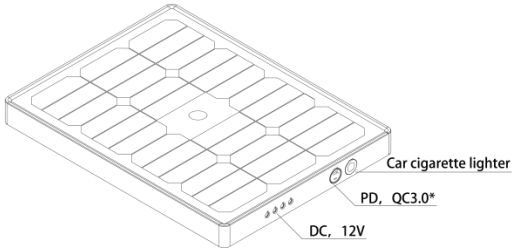

Warning

The AC adapter or car charger must be plugged into the DC plug to charge the table. Do not plug in the PV output port ! ! !

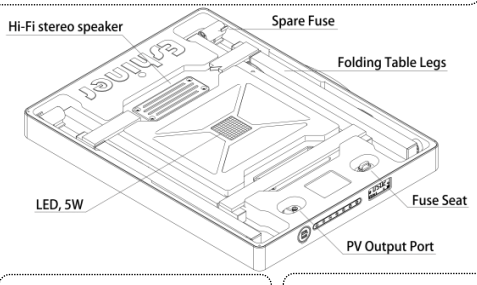

The fuse must be removed when table is not used for more than 5 days.

PV output port output is DC 18v,input is forbidden.

& Button use

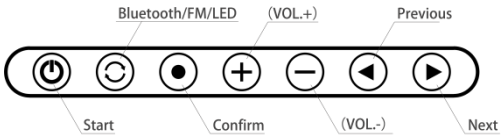

Starting up, the screen lights up and goes into standby if no operation with 5 minutes. The operation button activates related functions.

button: for switching between functions. If No selection after 15s,it returns to initial page.

button: for functions on and off.

button: switching function（Left）.

button: Switching function（Right）.

For switching and searching of songs and channels.

button: Increment.

button: decrement.

For volume adjustment.

& Product accessories

USB cable×1 PV output cable ×1 Car charger×1

Wireless Table Lamp×1

& Use

1.When use this product at the first time, please insert the fuse into fuse holder:

①.After inserting the fuse, the internal power system starts to operate.

②.All charging ports can be charged by external devices.

③.Meantime, the table under the sun will generate electricity to charge built-in lithium battery.

2.When the system switch is on, the bluetooth, radio, audio, and LED enter into use. Please refer to function manual for details（Remark：bluetooth name：ESHINER）.

3.There are 3 ways to charge built-in lithium battery:

①.Household electricity 220/110V adapter for charging.

②.Car power 12V car charger cable for charging.

③. Tabletop PV panel 18V solar energy for charging.

4.When lithium battery charged by PV panel in outdoor:

①.Try to let sunshine on the table as fully as possible.

②.When need to increase power generation efficiency, let sunshine irradiate vertically on the table as much as possible:

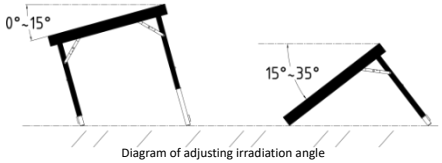

Diagram of adjusting irradiation angle

5.When the PV output is charging an external energy storage box (storage device):

①.Set the switch to "Ⅱ" to start output. PV output cable Connect output port with external energy storage device

②.Set the switch to "Ⅰ" to finish output, Charge the internal system.

③.Output voltage is 18V.

④.external energy storage box (storage device) should be equipped with a protective device.

6.How to use the wireless charging panel:

①.Place the bottom middle position of the LED in the wireless charging panel, it automatically lights up.

②.Place the phone with wireless charging function in the wireless charging panel, it automatically charged.

Please confirm the positive and negative poles of external energy storage device before connecting . It is strictly forbid to reverse the positive and negative poles, or short circuit!

7.How to expand and fold the table:

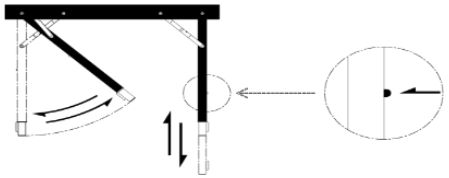

①.Spread the table legs outward from table, and straighten the supporting bar, it will self-locking.

②.When adjusting the height, gently pull the rung of the table leg to make a "click" sound, and the locating pin pops out from the hole and self-locking.

③.When folding the table, press the locating pin. At the same time, close the table leg to the lowest gear.

④.The legs are folded inward and hidden inside the table.

& Attention:

①.The table can bear as weight as max 30KG，uniform load.

②.When placing high temperature objects on the table (>70°), insulation pad should be used.

③.Can not in the rain for a long time. Protect table from scratching and violent collision

④.When temperature is below 0C°,system automatically cut off the lithium battery charging system. Meantime, Lithium battery output is normal.

⑤.When the table is not use, please remove the fuse. It should be charged at least one time per quarter in case the battery use out to damage.

⑥.Forbid to hit tabletop continuous and high-frequency to prevent damage to the desktop and internal electronic devices.

⑦.Forbid to unauthorized disassemble or modify the parts from the table. Avoid injury and dangerous.

⑧.Children should be used under adult guidance.

⑨.Forbid to short-circuit each output port. **Please remove the fuse in case of emergency!**

⑩.The signs（⚠）in the manual are warning signs.

& After-sales service and warranty:

1.The warranty card must be filled clearly and completely when product is sold. Please read warranty card carefully and save it. The warranty time of this product: table is 2 years, lithium battery is 1 year.

2. Warranty instruction: It is free during warranty period. After warranty period, if need to fix or exchange the lithium battery, contact dealer or our company to fix it, but we will charge you basic maintenance fee.

Warranty	Within one year from the date of purchase: _ _ _
distributor	**Company name:**
	Address:
	Tel:

3.Free warranty rules:

①. Free warranty if use product properly and something is wrong during warranty period.

②. Once non-human factor accident occur during free warranty period, please contact the dealer or the company's after-sales department, mail the product and warranty card to them.

③. Free gift has not warranty, the warranty of the lithium battery is 1 year.

④. Customer is responsible for full cost of the repair, if the following conditions occur during warranty period:

& Damage caused by actions which does not follow the instruction, unauthorized disassemble or modification.

& Artificial damage including there is no purchase date and no dealer's ecord in the warranty card.

& Damage caused by irresistible natural disasters such as floods, fires, earthquakes, lightning strokes, and wars.

& Other circumstances not covered by the warranty, except home use (for long-term rental or long-term use on ships).

FC CE RoHS

&Function Description

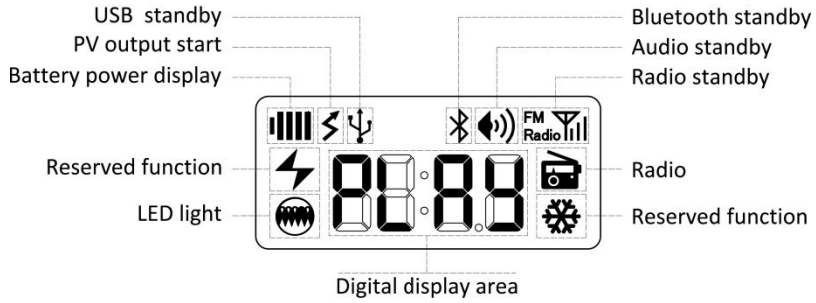

& Each port description:

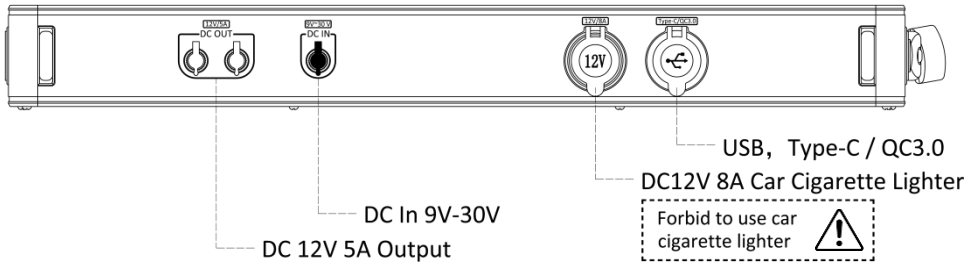

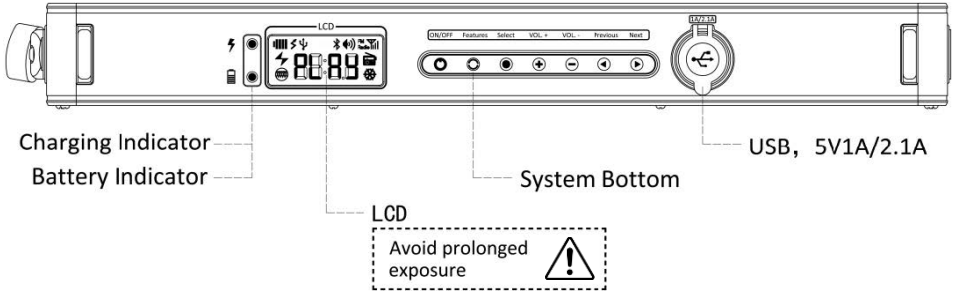

The fuse must be removed when the table is not used for more than 5 days or there is emergency.

&For more models, please consult dealer for more details.

& Special charging function description

In an emergency,(special occasions such as disaster relief, rescue, etc.), the following connections can form energy grid by connecting more energy products with this table.

Model YH-300-1B supports the following connection, if any doubt, Please contact your dealer timely.

Two tabletops can charging each other.

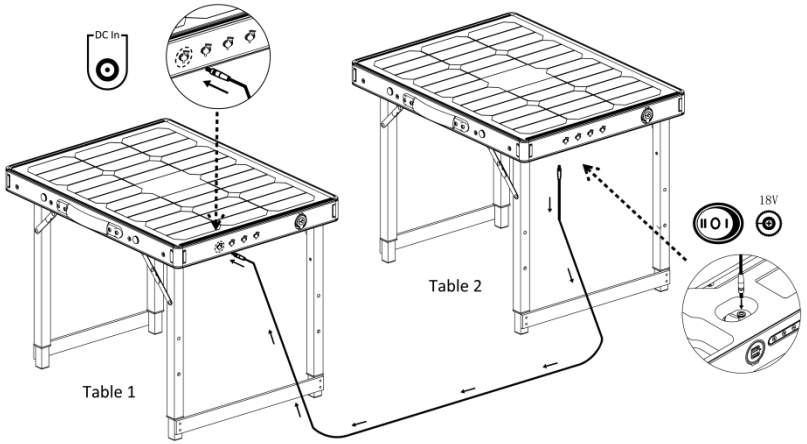

The table 2 above is connected in parallel with the table 1 to charge the table 1.

Charge external energy storage device (battery):

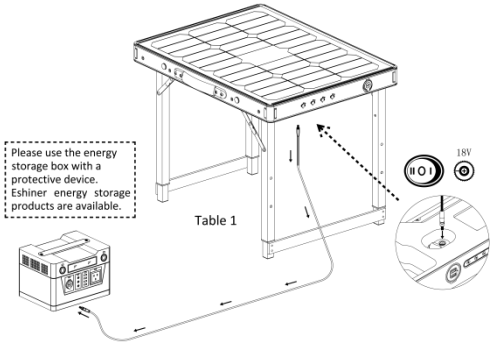

The tabletop power is charged to the external energy storage device. The table 1 above replaces the traditional PV panel to charge the external energy storage device;

The external solar energy panel (PV power pack) charges the table:

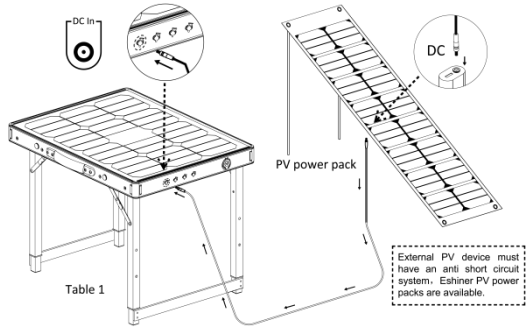

Improve power generation efficiency and shorten charging time. The above folding PV power pack is connected in parallel with the table 1 to charge the interior of the table.

ESHINER all rights reserved

FCC Warning Statement

Changes or modifications not expressly approved by the party responsible for compliance could void the user's authority to operate the equipment. This equipment has been tested and found to comply with the limits for a Class B digital device, pursuant to Part 15 of the FCC Rules. These limits are designed to provide reasonable protection against harmful interference in a residential installation. This equipment generates uses and can radiate radio frequency energy and, if not installed and used in accordance with the instructions, may cause harmful interference to radio communications. However, there is no guarantee that interference will not occur in a particular installation. If this equipment does cause harmful interference to radio or television reception, which can be determined by turning the equipment off and on, the user is encouraged to try to correct the interference by one or more of the following measures:

- Reorient or relocate the receiving antenna.
- Increase the separation between the equipment and receiver.
- Connect the equipment into an outlet on a circuit different from that to which the receiver is connected.
- Consult the dealer or an experienced radio/TV technician for help.

This device complies with part 15 of the FCC Rules. Operation is subject to the following two conditions: (1) This device may not cause harmful interference, and (2) this device must accept any interference received, including interference that may cause undesired operation.

RF Exposure: A distance of 20 cm shall be maintained between the antenna and users, and the transmitter may not be co - located with any other transmitter or antenna.