INSTRUCTION MANUAL

RC4WD 3-Channel 2.4Ghz Transmitter Z-R0009

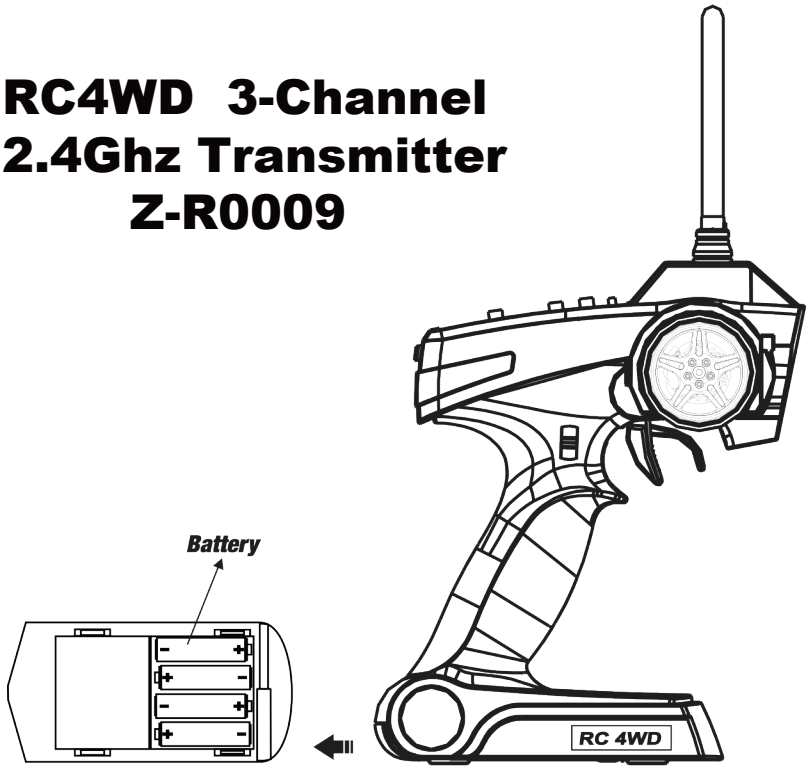

Install the batteries

(1) Remove the battery compartment cover.
(2) Replace the used batteries with new AA size batteries.

Please replace batteries when the power indicator blinks or the buzzer beeps.

Each part of the transmitter

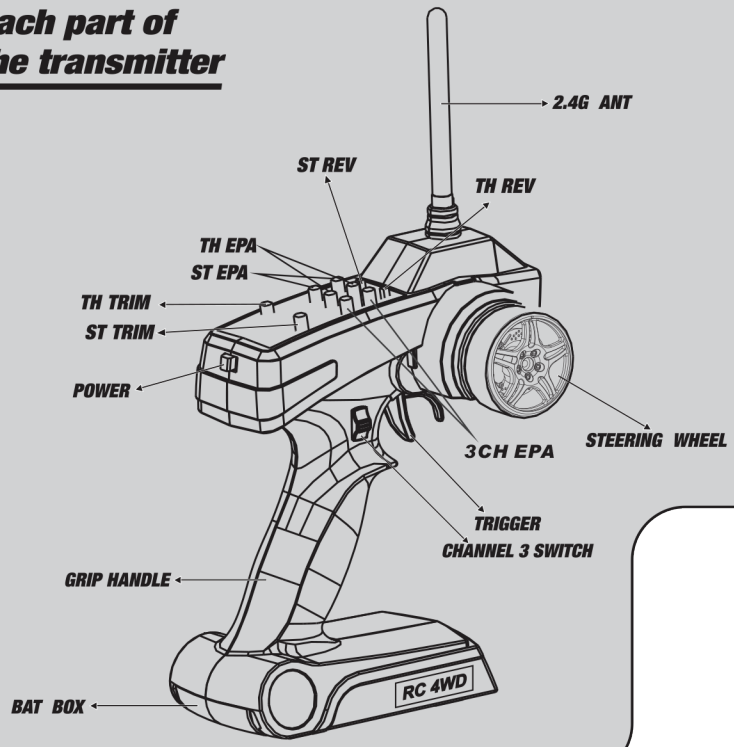

The transmitter size

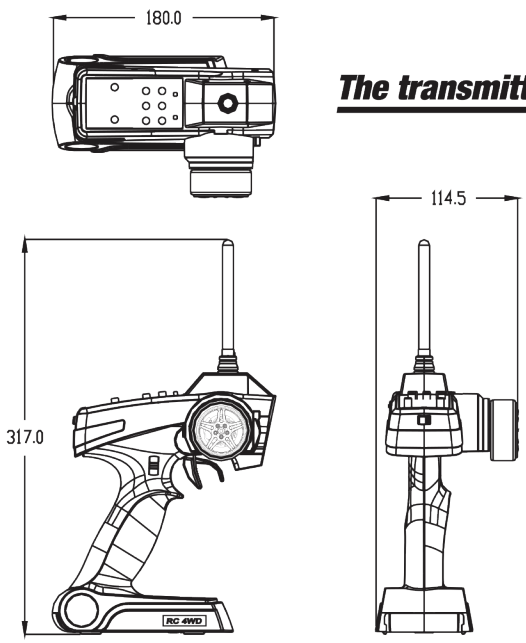

Transmitter Adjustment

A. Throttle Trigger

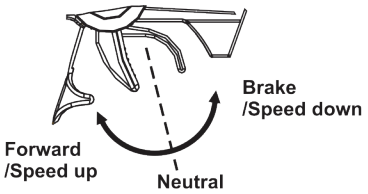

1. Push the trigger forward to slow down or brake.
2. Pull the trigger backward to accelerate.

B. Steering Wheel

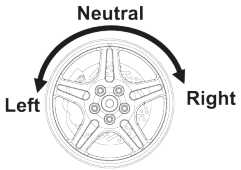

Turn the steering wheel to the left or right to let the vehicle turn left or right

⚠ **Keep the transmitter and receiver 40cm apart when operating.**

Low battery alarm

Do not operate the radio system when the battery power is low.

FCC Warning

This device complies with Part 15 of the FCC Rules. Operation is subject to the following two conditions:
(1) This device may not cause harmful interference, and (2) this device must accept any interference received, including interference that may cause undesired operation.

NOTE 1: This equipment has been tested and found to comply with the limits for a Class B digital device, pursuant to part 15 of the FCC Rules. These limits are designed to provide reasonable protection against harmful interference in a residential installation. This equipment generates, uses and can radiate radio frequency energy and, if not installed and used in accordance with the instructions, may cause harmful interference to radio communications. However, there is no guarantee that interference will not occur in a particular installation. If this equipment does cause harmful interference to radio or television reception, which can be determined by turning the equipment off and on, the user is encouraged to try to correct the interference by one or more of the following measures:
- Reorient or relocate the receiving antenna.
- Increase the separation between the equipment and receiver.
-Connect the equipment into an outlet on a circuit different from that to which the receiver is connected.
-Consult the dealer or an experienced radio/TV technician for help.

NOTE 2: Any changes or modifications to this unit not expressly approved by the party responsible for compliance could void the user's authority to operate the equipment.