iK4R

Thermal Transfer

Barcode Printer

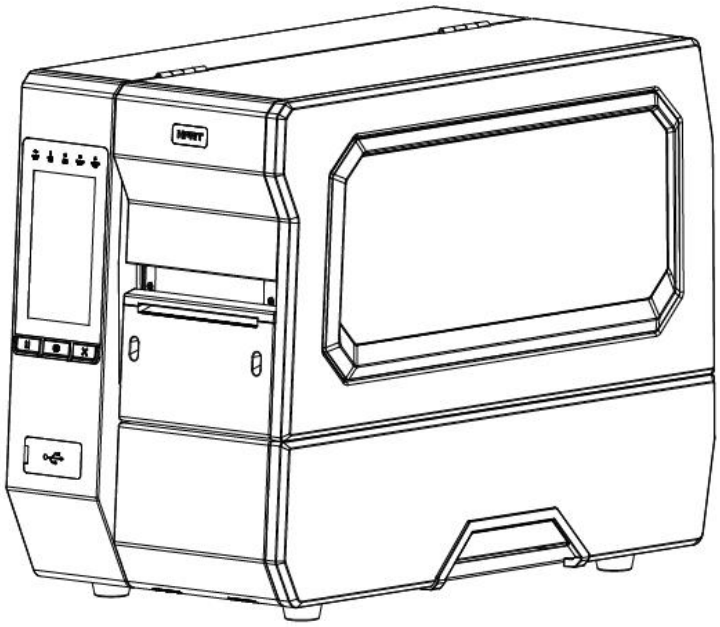

User Manual

Xiamen Hanin Co., Ltd.
ADD: Room 305A, Angye Building, Pioneering Park,Torch High-tech Zone,Xiamen,China
WEB: www.idprt.com

Rev.1.0

Contents

Important Safety Instructions 1
Chapter 1 Introduction 5
1.1 Packing List 5
1.2 Appearance and Components 6
1.3 Dimension 8
Chapter 2 Specifications 9
Chapter 3 Installation & Usage 12
3.1 Ribbon and Paper Loading 12
3.1.1 Ribbon loading 12
3.1.2 Media Loading 14
3.1.3 Media Path 17
3.2 Power Connection 19
3.3 Peripherals Connection 20
3.4 Operation Panel 21
3.4.1 Panel Introduction 21
3.4.2 Button Function Definition 21
3.4.3 Buzzer 22
3.4.4 Indicator Definition 23
3.5 Display Operation Procedure 25
3.6 RFID Settings 28
3.6.1 RFID Label Anntenna 28
3.6.2 RFID Calibration 28
3.6.3 Set RFID Reading Power 28
3.6.4 Set RFID Write Power 28
3.6.5 Read RFID Data 28
3.6.6 Set RFID Encode Position 29

Chapter 4 Interface 29
4.1 USB Interface 29
4.2 Other Optional Interfaces 30
Chapter 5 Maintenance & Adjustment 34
5.1 Cleaning Thermal Print Head 34
5.2 Cleaning Roller and/or Paper Path 35
Chapter 6 Printer Utility Tool Instructions 36
6.1 Installation Preparation 36
6.2 Usage 36
Chapter 7 Seagull Windows Driver Instructions 53
7.1 Introduction 53
7.2 Installation Preparation 53
7.3 Installation 54
7.4 Usage 60
7.4.1 Printing Preferences 60
7.4.2 Printer Properties 72
Chapter 8 BarTender UltraLite Instructions 76
8.1 Introduction 76
8.2 Installation Preparation 76
8.3 Installation 77
8.4 Usage 81
8.4.1 Page Settings 81
8.4.2 label Edit 90
Appendix I Display Menu 94
Appendix II Warning 100
Appendix III Download Path for UTILITY and Driver 102

Change Record

Rev.	Date	Description
1.0		

■ Statement

This manual content may be altered without permission, and our company reserves the rights to make changes without notice in technology, spare parts, hardware and software of the products. If more information is needed about the products, please contact our company. Without any written permission from our company, any section of this manual is prohibited to be copied or transferred in any form.

■ Copyright

This manual is printed in 2024, the copyright belongs to Xiamen Hanin Co.,Ltd.

Printed in China

1.0 Version

■ Warnings

This must be complied with in order to avoid any damage to the human body and the equipment.

This is showing the important information and tips for the printer operation.

Note: Due to continuous update of our product, the description of printer specification, accessories, design in this manual may be slightly different. Please keep in kind prevail.

Important Safety Instructions

Before using the appliance, please carefully read the following safety regulations in order to prevent any hazard or material damage.

1. Safety warning

Warnings: The print head will become very hot during printing. avoid contact with the print head after printing has finished.

Warnings: Do not touch the printer head and connector in case static damage the printer head.

2. Instructions

Warnings: Violating following instructions can cause serious injury or death.

1) Do not plug several products in one multiperture outlet.

- This can provoke over-heating and a fire.
- If the plug is wet or dirty, dry or wipe it before usage.
- If the plug does not fit perfectly with the outlet, do not plug in.
- Be sure to use only standardized multiperture outlet.

2) You must use the supplied adapter.

- It is dangerous to use other adapters.

3) Do not pull the cable to unplug.

- This can damage the cable, which is the origin of a fire or a breakdown of the printer.

4) Do not plug in or unplug with your wet hands.

- You can be electrocuted.

5) Do not bend the cable by force or leave it under any heavy object.

- A damaged cable can cause a fire.

Note: Violating following instructions may cause slight damage of the appliance.

1) If you observe a strange smoke, odour or noise from the printer, unplug it before taking following measures.

- Switch off the printer and unplug the set from the mains.
- After the disappearance of the smoke, call your dealer to repair it.

2) Install the printer on the stable surface.

- If the printer falls, it can be broken and you can hurt yourself.

3) Use the approved accessories only and do not try to disassemble, repair or remodel it by yourself.

- Call your dealer when you need these services.
- Do not touch the blade of auto cutter.

4) Do not let water or other foreign objects drop into the printer.

- If this happened, switch off and unplug the printer before calling your dealer.

5) Do not use the printer when it is out of order. This can cause a fire or an electrocution.

- Switch off and unplug the printer before calling your dealer.

6) Other considerations:

- Place the printer on a solid and even base so that it cannot fall.
- Leave enough space around printer for operation and maintenance.
- Keep all liquids away from the printer.
- Do not expose the printer to high temperatures, direct sunlight or dust.
- Ensure the printer is connected to a socket with the correct mains voltage.
- Switch off the printer POWER supply when it’s not in use for a long time.
- To ensure the printing quality and reliability, suggest use the same quality or recommend paper supplier.
- Pls. switch off the POWER supply when connect/disconnect all the ports or it will cause damage to the printer control circuit.
- Never carry out maintenance or repair work yourself. Always contact a qualified service Technician.
- Keep this User Manual in a place which is easily accessible for all times.

3. Other Precautions

The copyright for this user manual and various other manuals is property of our company. Any copying or conversion into electronic form and saving of this material without the express written permission is strictly prohibited. Use of the information contained in this manual is not subject to any patent liability. This manual has been prepared with utmost care and attention to detail but may contain certain errors and/or omissions. Our company is not legally liable for any damages resulting from the use of the information in this manual. Our company and its affiliates are not legally liable (United States excluded) for any damages, loss, costs, and/or expenses that result from the breakdown, malfunction, and/or misuse of the product due to violation or neglect of the operation and maintenance information and instructions provided by our company, as well as from the unauthorized alteration, repair, and/or modification of the product by the user and/or third party. We are not legally liable for any damages and/or issues resulting from the use of options and/or parts that are not authentic or authorized products.

4. WEEE (Waste Electrical and Electric Equipment)

This mark shown on the product or its literature indicates that the corresponding item should not be discarded at the end of its working life with others household waste. To prevent possible harm to the environment or human health from uncontrolled waste disposal, please separate marked items from other types of waste and recycle them responsibly to promote the sustained reuse of material resources. Household users should contact either the retailer where they purchased this product, or their local government office for details of where and how they can conduct environmentally safe recycling of such items. Commercial users should contact their suppliers and check the terms and conditions of purchase contracts. This product should not be combined with other commercial waste for disposal.

Caution: This is a Class A product. In a domestic environment this product may cause radio interference in which the user may be required to take adequate measures.

5.FCC WARNING

This device complies with part 15 of the FCC Rules. Operation is subject to the following two conditions: (1) this device may not cause harmful interference, and (2) this device must accept any interference received, including interference that may cause undesired operation.

Any changes or modifications not expressly approved by the party responsible for compliance could void the user's authority to operate the equipment.

NOTE: This equipment has been tested and found to comply with the limits for a Class A digital device, pursuant to part 15 of the FCC Rules. These limits are designed to provide reasonable protection against harmful interference when the equipment is operated in a commercial environment. This equipment generates, uses, and can radiate radio frequency energy and, if not installed and used in accordance with the instruction manual, may cause harmful interference to radio communications. Operation of this equipment in a residential area is likely to cause harmful interference in which case the user will be required to correct the interference at his own expense.

-- Reorient or relocate the receiving antenna.

-- Increase the separation between the equipment and receiver.

-- Connect the equipment into an outlet on a circuit different from that to which the receiver is connected.

-- Consult the dealer or an experienced radio/TV technician for help.

To maintain compliance with FCC's RF Exposure guidelines, This equipment should be installed and operated with minimum distance between 20cm the radiator your body: Use only the supplied antenna.

Chapter 1 Introduction

1.1 Packing List

1. Unpack the printer and keep the packing material in case you need to ship the printer in the future.
2. Any damages exist, please contact the local dealer.

Printer

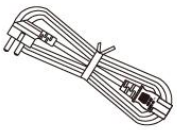

Power Cord

USB Cable

Quick Start Guide

Note: The packing materials are based on the order.

1.2 Appearance and Components

▪Front View

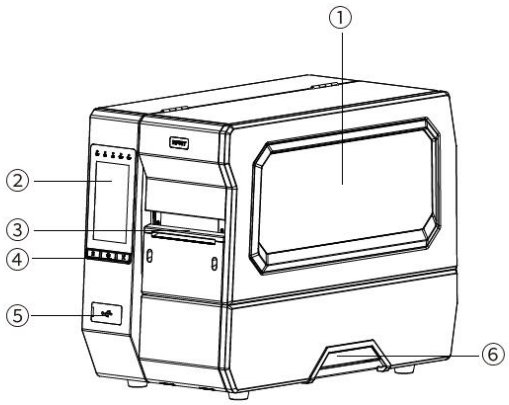

① Side Cover ② Display ③ Paper Outlet
④ Buttons ⑤ USB Host ⑥ Side Cover Opening

▪Rear View

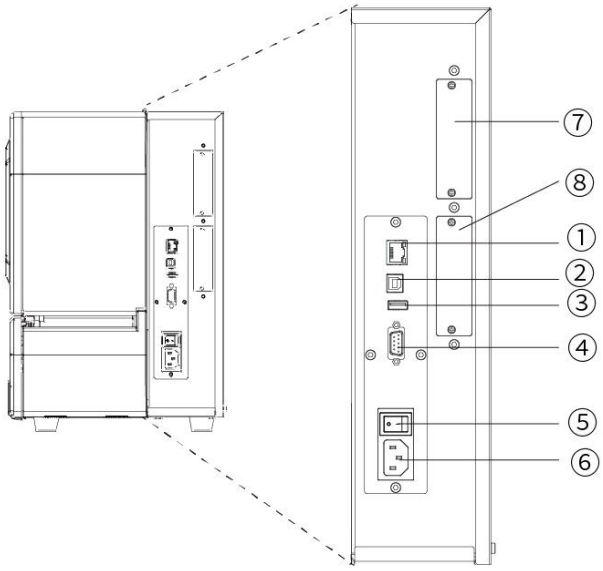

① Ethernet Port ② USB B-type ③ USB Host
④ Serial Port ⑤ Power Switch ⑥ AC Power Port
⑦ GIPO Port (Optional) ⑧ LTP Port (Optional)

▪Inside View

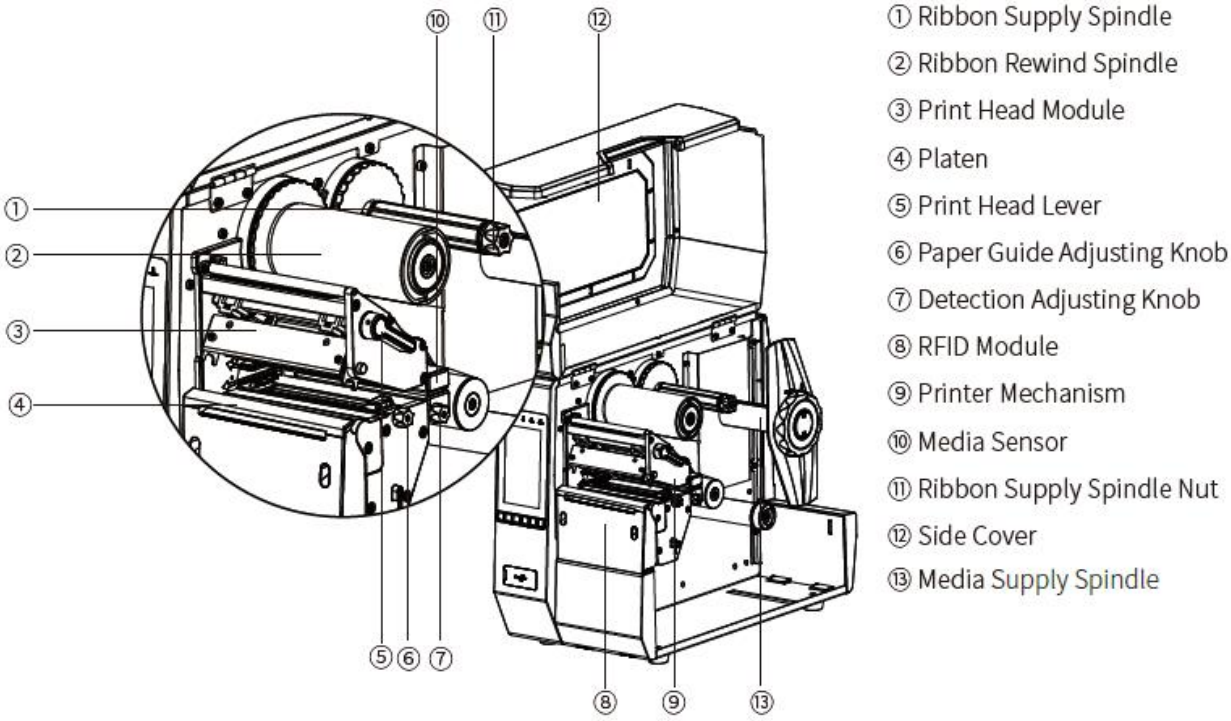

Printer Mechanism

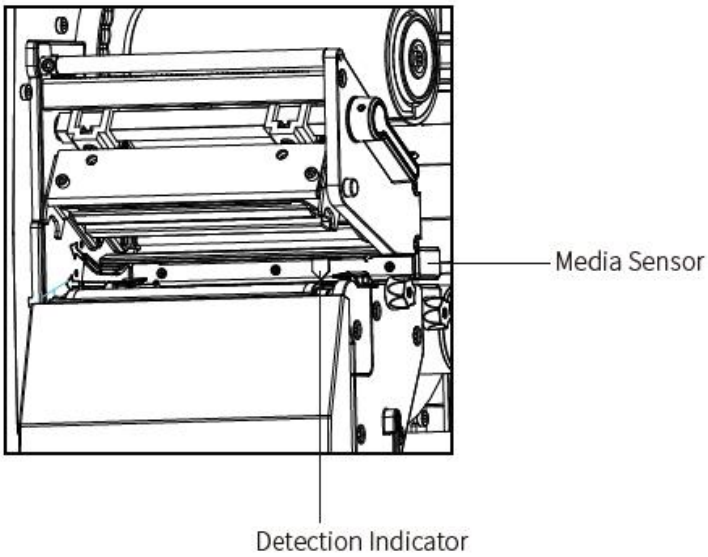

Note: The views above are for your reference. Ports vary by your choice.

1.3 Dimension

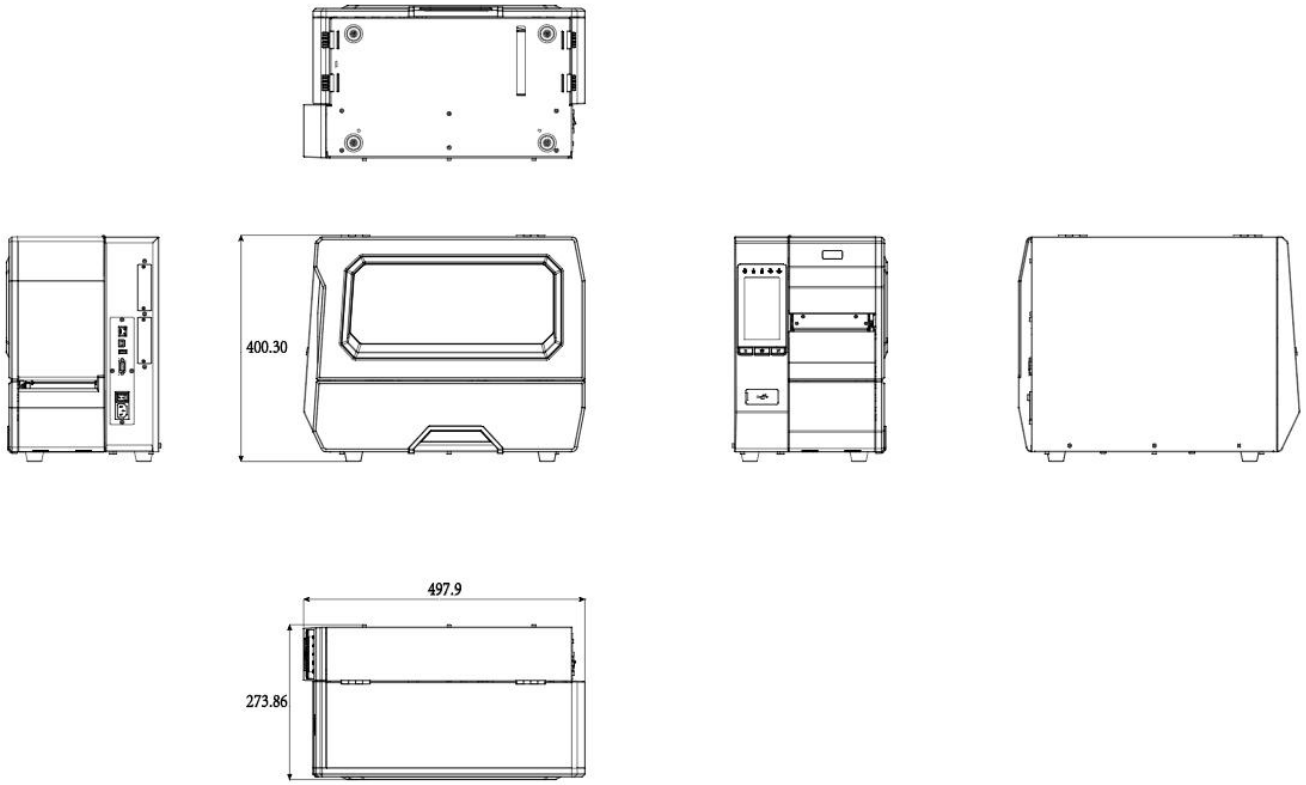

Chapter 2 Specifications

Item		Parameter
Model		iK4R
Printing	Printing Method	Direct thermal/ Transfer thermal
	Resolution	203dpi/300dpi/600dpi
	Max. Printing Speed	203dpi:14ips 300dpi:10ips 600dpi:6ips
	Max. Printing Width	203dpi:104 mm 300dpi:106 mm 600dpi:106 mm
	Max. Printing Length	203dpi:3810 mm 300dpi:2540 mm 600dpi:762 mm
Programming Language		DPL,EPL2,ZPL-II,TSPL
RFID		Working frequency FCC 902-928MHz adjustable Supports EPC Class1/Gen 2, ISO18000-6C
Media	Type	Folding paper or web paper, die-cut or continuous label paper, black mark paper
	Width	20 mm - 114 mm
	Thickness	0.08 mm - 0.25 mm
	Min Height	3 mm
	Roll Paper Diameter	203 mm
	Int. Diameter	76.2 mm

Item		Parameter
Ribbon	Type	Wax, Resin, Mixes Base
	Inside Diameter	25.4 mm
	Width	30 mm – 110 mm
	Max length	450 meters
Processor		32-bit RISC CPU
Built-in fonts	Bitmap Font	6, 8, 12, 16, 32, OCR A&B. 90 °, 180 °, 270 ° rotation and 10x magnification in both horizontal and vertical directions
	Vector Font	Equal width CG Triumvirate ™ Vector font
Downloadable fonts	Bitmap Font	90 °, 180 °, 270 ° rotatable, single text 90 °, 180 °, 270 ° rotatable
	Vector Font	90 °, 180 °, 270 ° rotatable
	Asian Characters	16x16, 24x24 Traditional Chinese, Simplified Chinese, Japanese, Korean
One-dimensional Code		Code 39, Code 93, EAN 8/13 (add on 2 & 5), UPC A/E (add on 2 & 5), I 2 of 5 & I 2 of 5 with Shipping Bearer Bars, Codabar, Code 128 (subset A, B, C), EAN 128, RPS 128, UCC 128, UCC/EAN-128 K-Mart, Random Weight, Post NET, ITF 14, China Postal Code, HIBC, MSI, Plessey, Telepen, FIM, GS1 DataBar, German Post Code, Planet 11 & 13 digit, Japanese Postnet, I 2 of 5 with human readable check digit, Standard 2 of 5, Industrial 2 of 5 , Logmars, Code 11, Code 49, Cadablock
QR code		PDF417, Data matrix code, Maxi Code, QR code, Micro PDF417, Micro QR code, Aztec code
Dimension		460.4*263.6*330.5 mm
		12.5 Kg

Item			Parameter
Hardware Specification	Sensor		Out-of-paper Sensor Gap Sensor Cover Opening Sensor Black Mark Sensor Thermal Head Temperature Detection
	Interface	Standard	1 USB2.0 Type-B
			1 USB HOST
			1 100/1000Mps Ethernet Interface
			1 RS232 Serial Interface
			Bluetooth
		Optional	Wi-Fi
			1 Parallel Interface
			1 GPIO Interface
	Memory	RAM	1GB
		Flash	2GB
	Display		5 indicators, 3 control keys: (pause key, feed key, cancel key) 1 5.5 inch color touch screen
			Clock
Security Specification			CCC,FCC,CE,CB,UL,RoHS WEEE
Working Temperature	+5°C ～+40°C		
Relative Humidity	30% ～85%, non-condensing		
Power Input	100V AC～240V AC, 50Hz～60Hz		
Optional	Electric cutter module (cutter, rotary blade) Label stripping module Built-in bottom paper rewinding device (can rewind the entire roll to print labels, or rewind the bottom paper) UHF RFID module		

Chapter 3 Installation & Usage

3.1 Ribbon and Paper Loading

3.1.1 Ribbon loading

1.Place the printer on the flat table, lift the cover from the bottom-right of printer by hand.

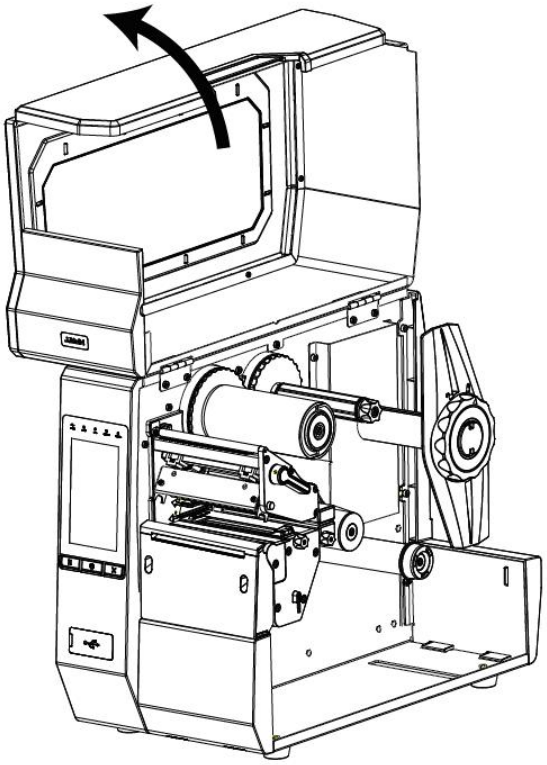

2.Load the ink ribbon into ribbon supply spindle, then anticlockwise tighten the ribbon supply spindle nut to fix the ribbon.

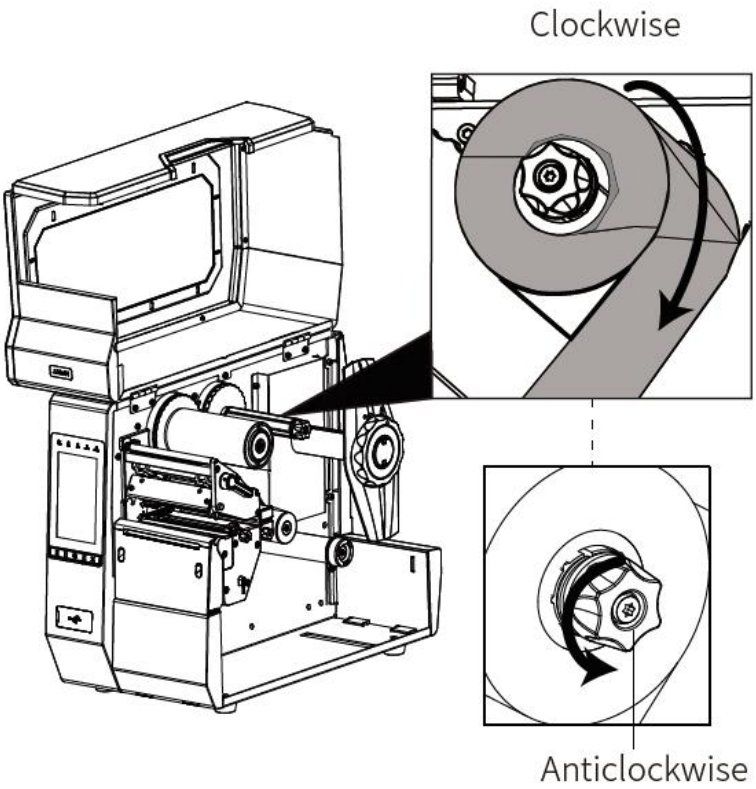

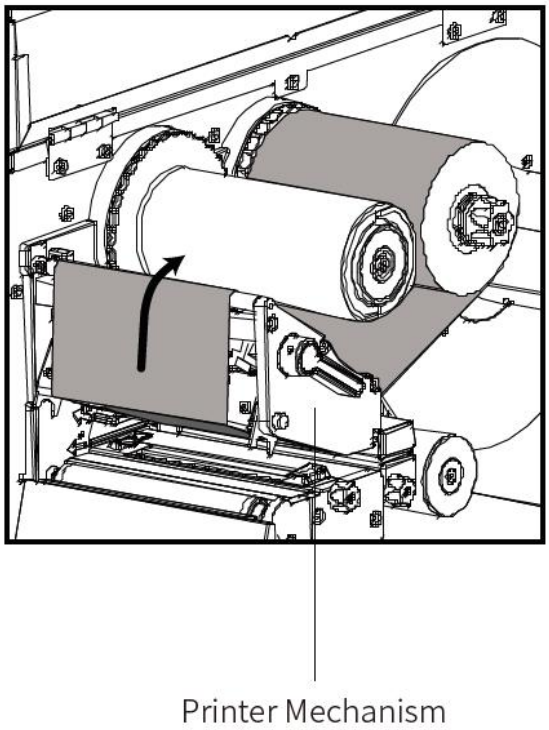

3. Pull part of the ribbon through the lower part of the

4.printer mechanism.

4. Pass the ribbon over the printer mechanism and stick the ribbon on the rewind spindle, then wrap it several turns around the ribbon rewind spindle so that make the ribbon flat.

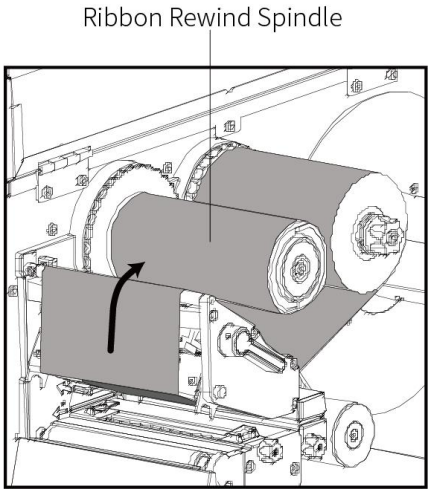

3.1.2 Media Loading

1. Take out the media, align the media with the media supply spindle and put it in. Then put the media baffle back into the printer.

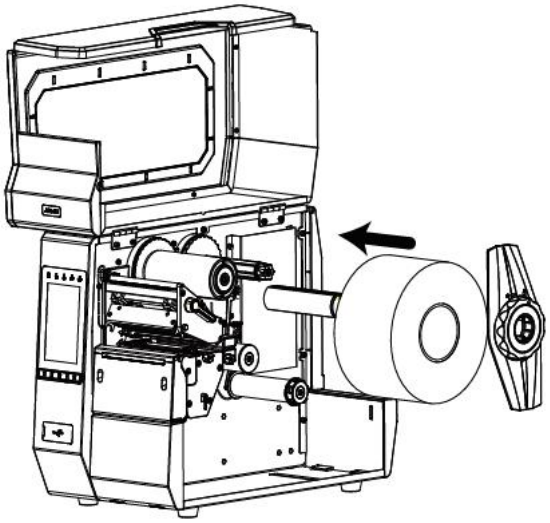

2. Pull out part of the paper roll, pass through the lower part of the paper guide roller 1 and the upper part of the paper guide roller 2, then pass under the media sensor, and then pull to the paper outlet.Adjust the paper guide adjusting knob according to the paper width to fix both sides of the paper (increase clockwise and decrease anticlockwise).

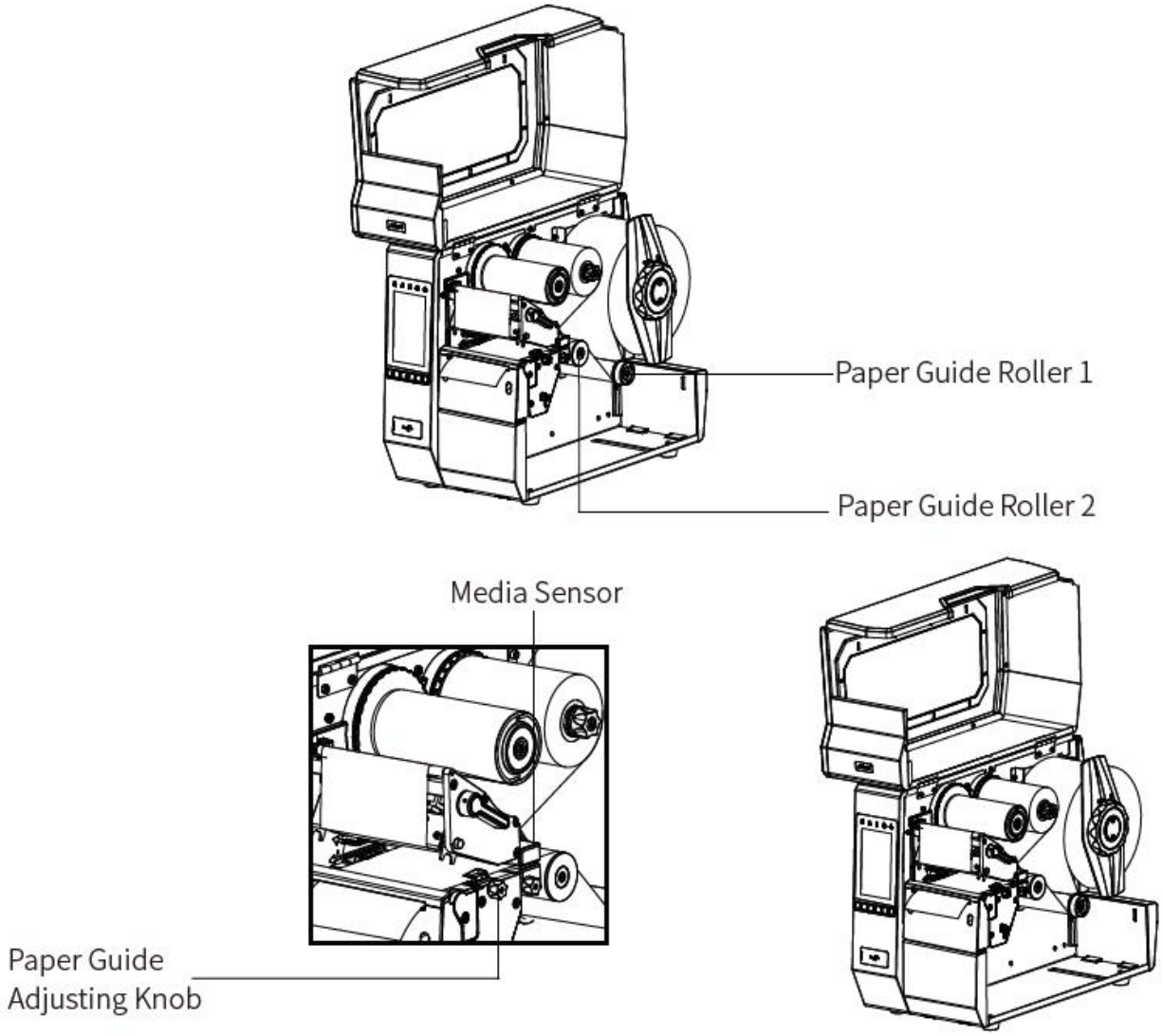

3. When using the gap label,black mark label or punch hole label,you can adjust detection indicator by the detection adjusting knob for detecting print position.

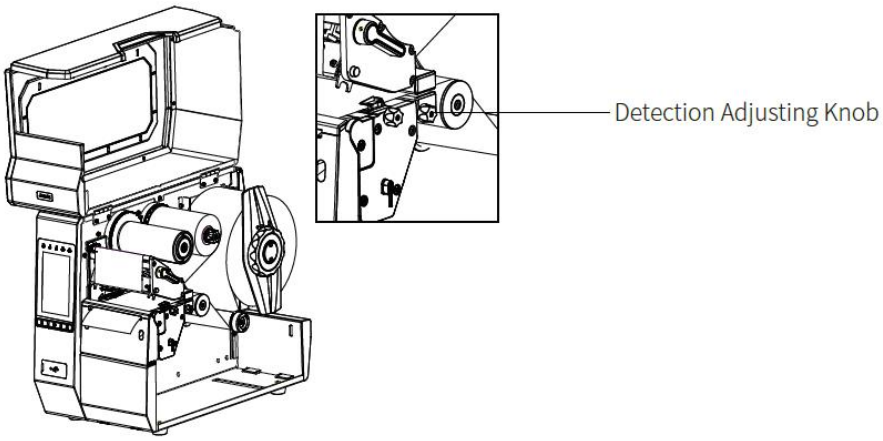

4. After finishing the label loading, turn down the print head lever to make ribbon and label fit snugly.

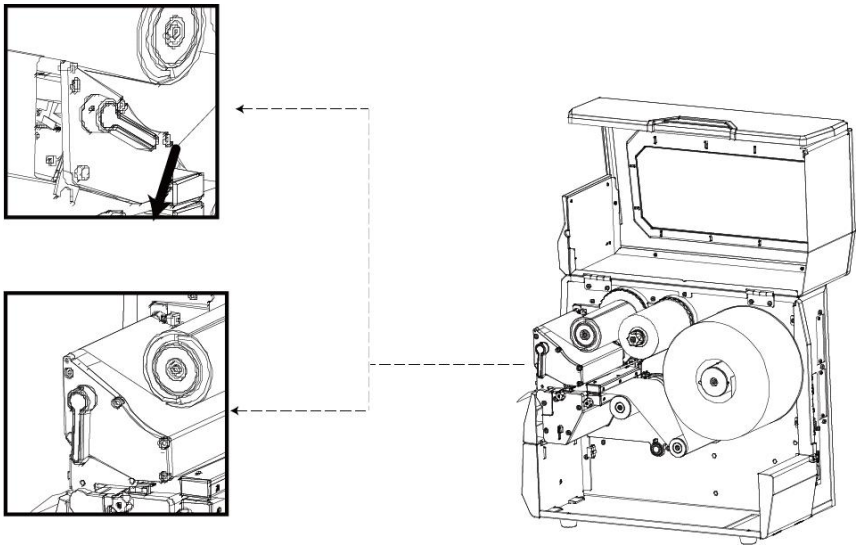

3.1.3 Media Path

1. TEAR-OFF mode

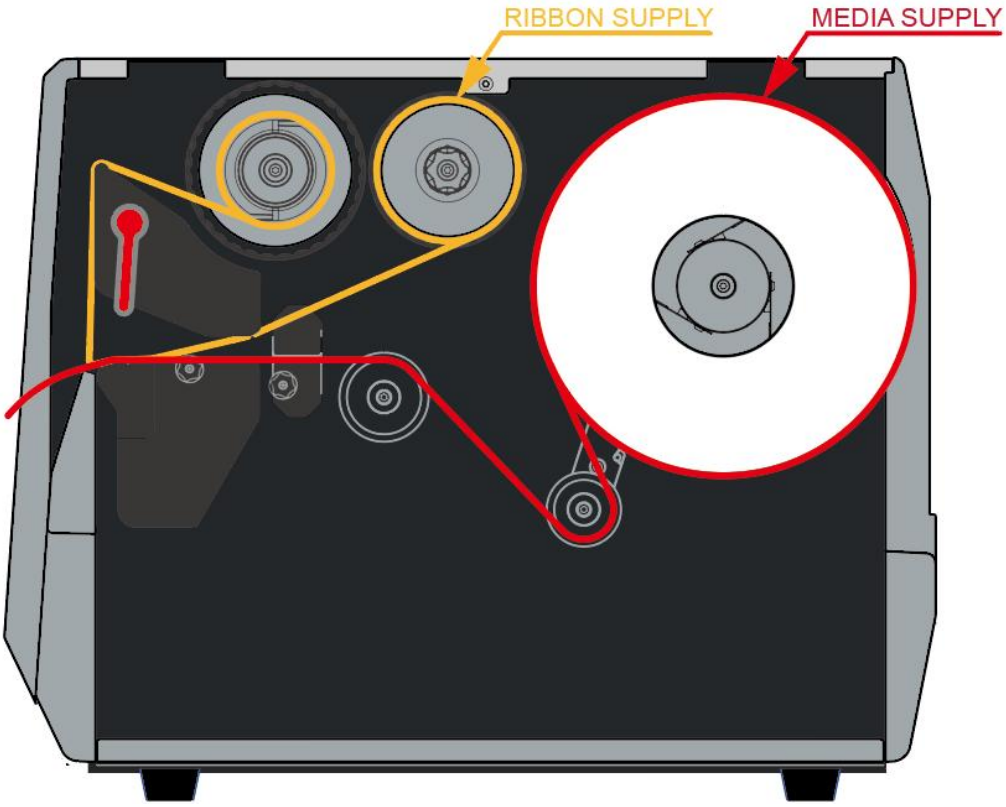

2.CUTTER mode

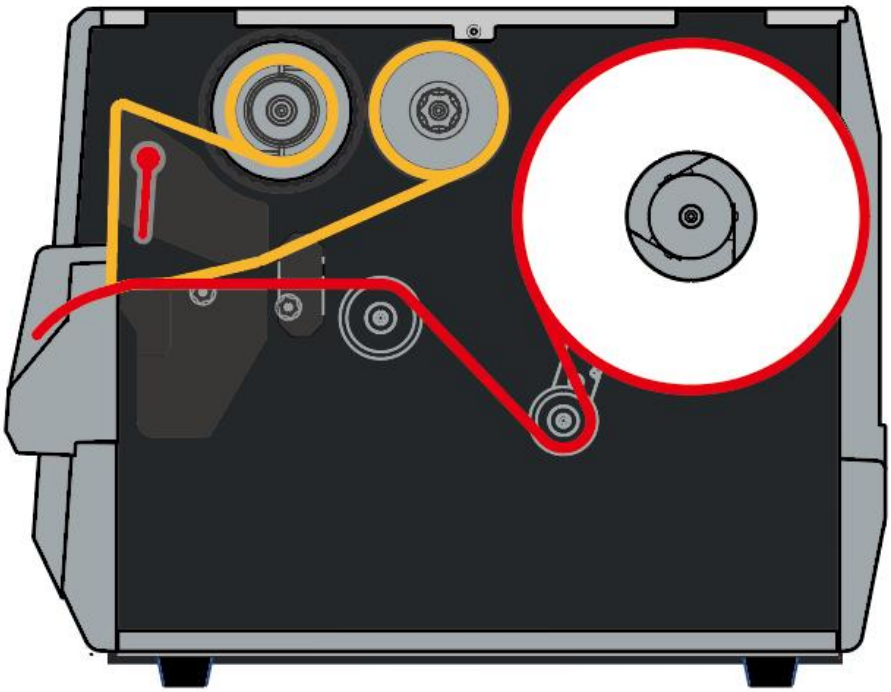

3. PEEL-OFF/REWIND mode

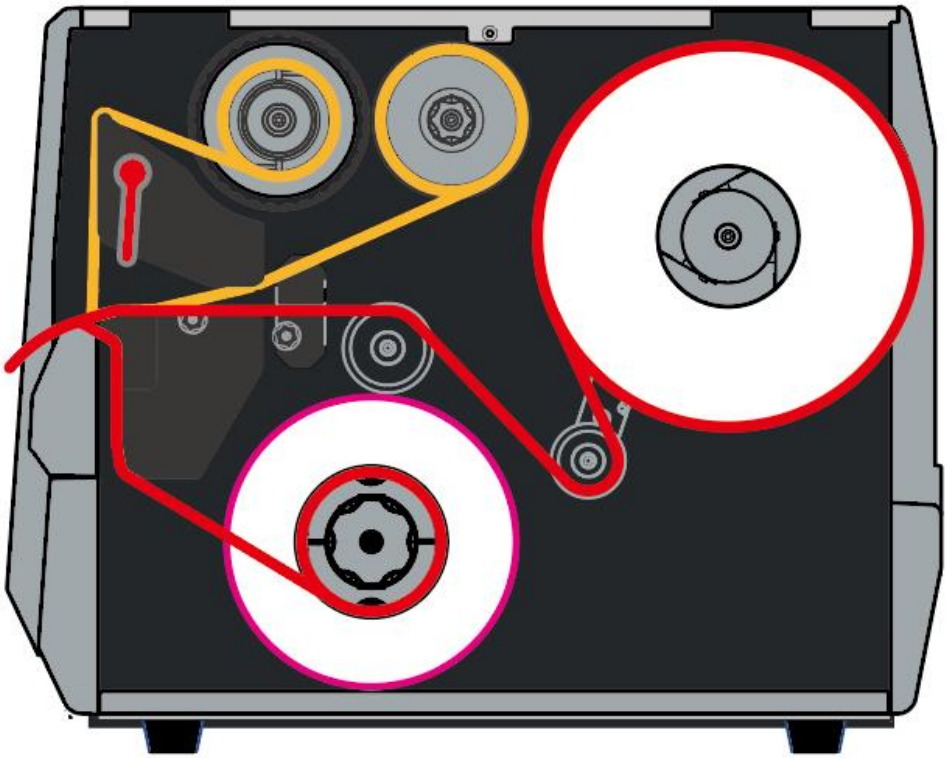

3.2 Power Connection

1.Connect the power plug to power receptacle.

2.Connect the other end of power cord to the AC power port.

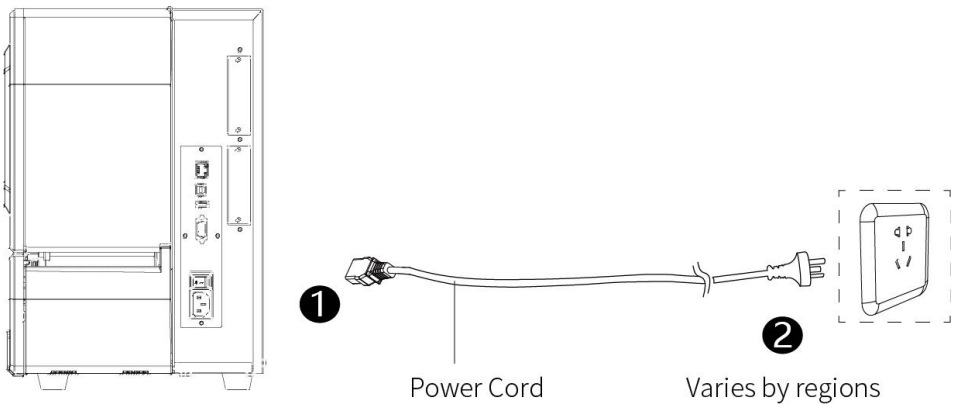

Caution:

- Use the original power adapter only. Avoid the damage caused by charging improperly.
- Please unplug the printer power cord if it is not in use for a long time.

3.3 Peripherals Connection

When printing paper, the moveable label sensor is used to detect paper. The label sensor moves differently when using various kinds of paper. If user moves the sensor improperly, paper may not be detected, therefore the printer could not print paper. The following instructions tell users how to use label sensor correctly. Please read it carefully.

When printing, the sensor shall be aimed at the triangle below, which is the original position.

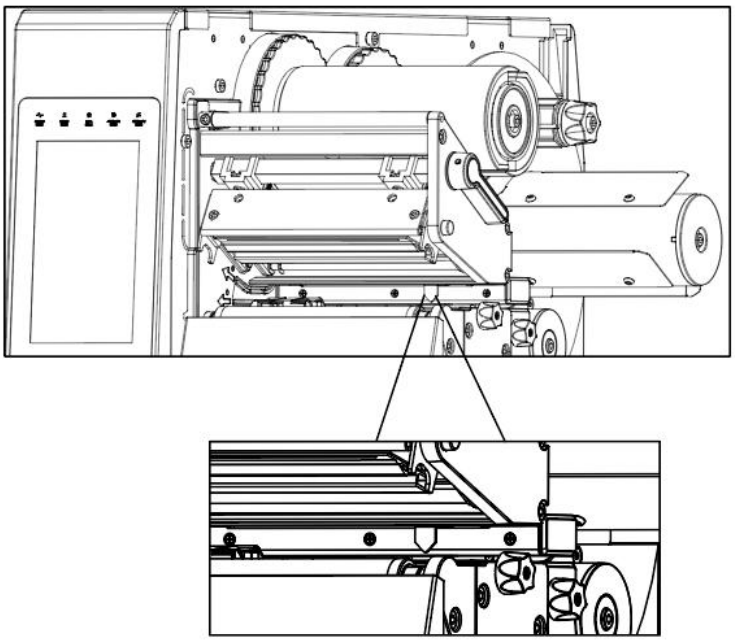

3.4 Operation Panel

3.4.1 Panel Introduction

The panel indicates the printer's operating status and allows the user to control basic printer operation.

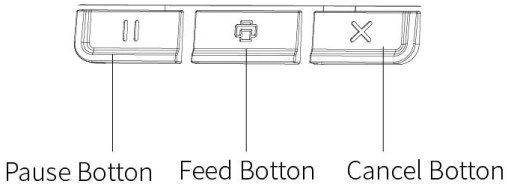

3.4.2 Button Function Definition

1. Feed button:

- In the ready state, press the feed button *(<1 seconds),* then release the feed button. The printer will **make a blank paper positioning** according to label / black mark label. If it is continuous paper, press the feed button and the printer will continue to feed the paper. Release the paper feed button to stop printing immediately.
- In the ready state, press the feed button and cancel button *(approx. 2 seconds).* And the printer prints the **self-test page**.

2. Pause button:

- In Printing: short press to pause print.
- Printing Pause: short press to keep printing.

3. Cancel button:

- Short press to cancel the current printing task.

➢ Note: short press: 0.3 seconds to 1 seconds.

Long press: larger than 3 seconds

3.4.3 Buzzer

1. Silence: not set / normal
2. Beep 0.2 seconds: button response / touch response
3. Beep 1.5 seconds and stop 2 seconds: during printing, run out of paper / label off / paper jam

3.4.4 Indicator Definition

STATUS (状态) PAUSE (暂停) DATA (数据) SUPPLIES (耗材) NETWORK (网络)	• The STATUS indicator light glows green (other indicators glows yellow for 2 seconds when the printer is powered on) The printer is ready.
STATUS (状态) PAUSE (暂停) DATA (数据) SUPPLIES (耗材) NETWORK (网络)	• The PAUSE indicator light glows yellow The printer has been paused.
STATUS (状态) PAUSE (暂停) DATA (数据) SUPPLIES (耗材) NETWORK (网络)	• The STATUS indicator light glows red • The SUPPLIES indicator light glows red Media exhausted. The printer needs to be checked, and without user intervention, it will not be able to continue working.
STATUS (状态) PAUSE (暂停) DATA (数据) SUPPLIES (耗材) NETWORK (网络)	• The STATUS indicator light glows red • The SUPPLIES indicator light flashes red Carbon out. The printer needs to be checked, and without user intervention, it will not be able to continue working.
STATUS (状态) PAUSE (暂停) DATA (数据) SUPPLIES (耗材) NETWORK (网络)	• The STATUS indicator light glows yellow • The SUPPLIES indicator light flashes yellow The printer is in "thermal" mode, which does not require the use of carbon; However, the carbon is already installed in the printer.
STATUS (状态) PAUSE (暂停) DATA (数据) SUPPLIES (耗材) NETWORK (网络)	• The STATUS indicator light glows red • The PAUSE indicator light glows yellow Print head open. The printer needs to be checked, and without user intervention, it will not be able to continue working.
STATUS (状态) PAUSE (暂停) DATA (数据) SUPPLIES (耗材) NETWORK (网络)	• The STATUS indicator light glows yellow. Print head overtemperature. The temperature of the print head is very high, which may cause serious burns. Allow the print head to cool sufficiently.
STATUS (状态) PAUSE (暂停) DATA (数据) SUPPLIES (耗材) NETWORK (网络)	• The STATUS indicator light flashes yellow The flashing indicator light indicates one of the following states: **a.** The print head temperature is too low. **b.** The temperature of the power component is too high. **c.** The temperature of the main logic circuit board is too high.
STATUS (状态) PAUSE (暂停) DATA (数据) SUPPLIES (耗材) NETWORK (网络)	• The STATUS indicator light glows red • The PAUSE indicator light glows red • The DATA indicator light glows red When replacing the print head, the original Hanin "iDPRT" print head was not used. Install the original Hanin "iDPRT" print head to continue the operation.

STATUS (状态) PAUSE (暂停) DATA (数据) SUPPLIES (耗材) NETWORK (网络)	• The STATUS indicator light flashes in red The printer is unable to read the dpi settings of the print head.
STATUS (状态) PAUSE (暂停) DATA (数据) SUPPLIES (耗材) NETWORK (网络)	• The NETWORK indicator light is off There is no available Ethernet connection.
STATUS (状态) PAUSE (暂停) DATA (数据) SUPPLIES (耗材) NETWORK (网络)	• The NETWORK indicator light glows green The 100 Base-T network is connected.
STATUS (状态) PAUSE (暂停) DATA (数据) SUPPLIES (耗材) NETWORK (网络)	• The NETWORK indicator light glows yellow The 10 Base-T network is connected.
STATUS (状态) PAUSE (暂停) DATA (数据) SUPPLIES (耗材) NETWORK (网络)	• The NETWORK indicator light glows red An Ethernet error occurred. The printer is not connected to the network.
STATUS (状态) PAUSE (暂停) DATA (数据) SUPPLIES (耗材) NETWORK (网络) STATUS (状态) PAUSE (暂停) DATA (数据) SUPPLIES (耗材) NETWORK (网络) STATUS (状态) PAUSE (暂停) DATA (数据) SUPPLIES (耗材) NETWORK (网络)	• The NETWORK indicator light is off Radio signal detected during power up. The printer attempted to associate with the network. When the printer is associated with a network, the indicator light flashes red. When the printer performs network authentication, the indicator light flashes yellow.
STATUS (状态) PAUSE (暂停) DATA (数据) SUPPLIES (耗材) NETWORK (网络)	• The NETWORK indicator light glows green The wireless signal has been associated with your network and verified, and the WLAN signal is strong.
STATUS (状态) PAUSE (暂停) DATA (数据) SUPPLIES (耗材) NETWORK (网络)	• The NETWORK indicator light flashes green The wireless signal has been associated with your network and verified, but the signal from the WLAN is weak.
STATUS (状态) PAUSE (暂停) DATA (数据) SUPPLIES (耗材) NETWORK (网络)	• The NETWORK indicator light glows red There is a WLAN error. The printer is not connected to the network.

3.5 Display Operation Procedure

▲Note: The user can confirm the status of the printer via the display.

It is divided into ready display, home menu display, sub-menu displays and operating displays.

1. Make sure that the printer is connected and the roll is installed correctly.

2. Turn on the printer power. After the printer is turned on, the display screen will display the Homepage interface. Under the homepage interface, users can obtain information about the printer name, menu, and firmware version. You can rotate the printer's image 360 degrees to view it from various angles.

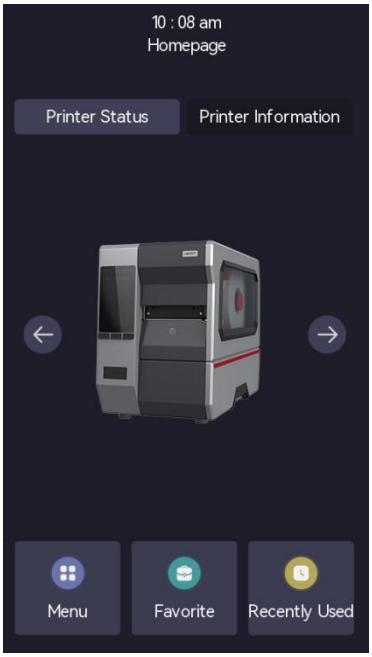

The following options are located on the Printer Status tab of the homepage interface:

- **Menu** — You can change printer settings.
- **Favorite** — Touch the dark star icon next to the menu item to save it to the favorites list. The options in "Favorites" are displayed in the order of saving.
- **Recently Used** — Automatically save the 5 most recently used menu options.

(1) Under the printer homepage interface, tap "Menu" to enter the system settings.

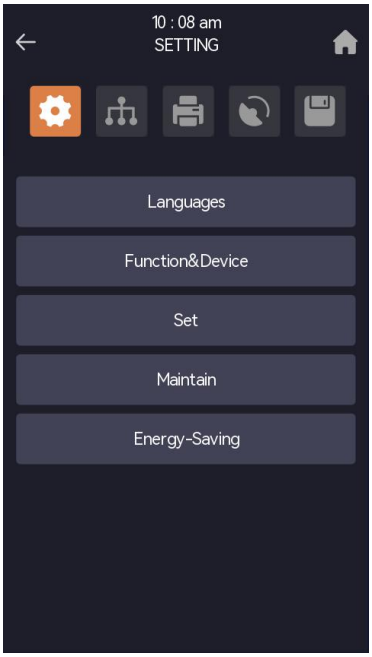

To enter print settings, select **Print Quality**, and then select the corresponding parameters to set. For example, selecting **Print Speed**, click - or+or drag the slider to adjust the printing speed (reducing the printing speed usually results in higher printing quality). The same applies to other settings.

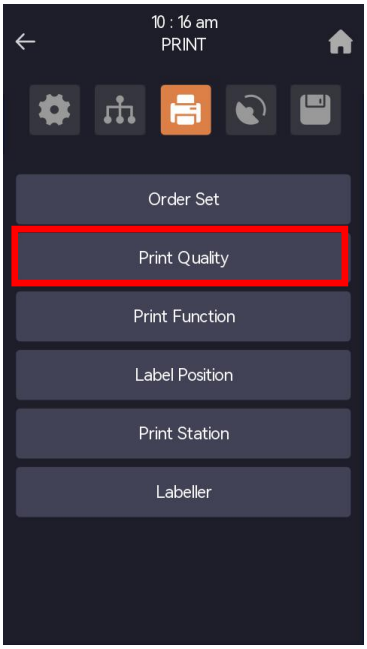

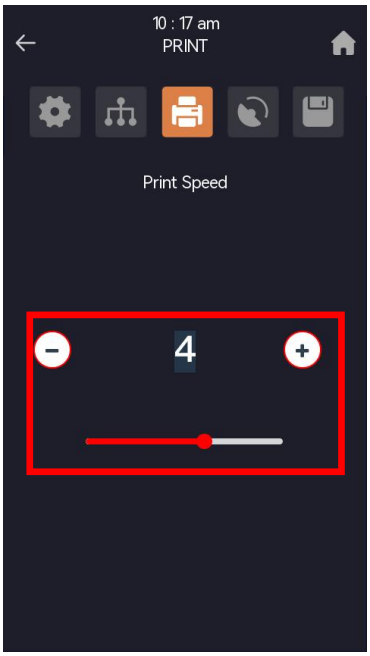

(2) Under the printer homepage interface, tap "Favorite" to view the favorite list.

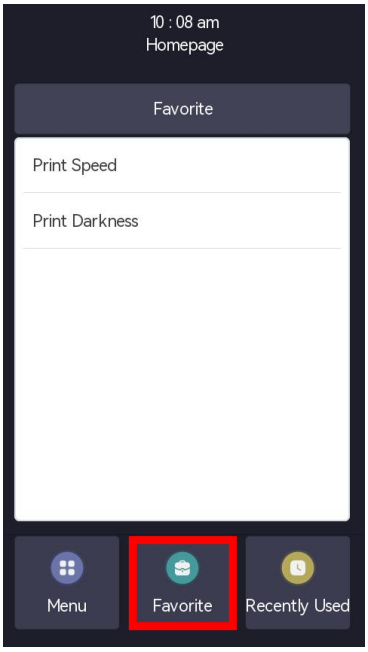

(3) Under the printer homepage interface, tap "Recently Used" to view the recently used menu items.

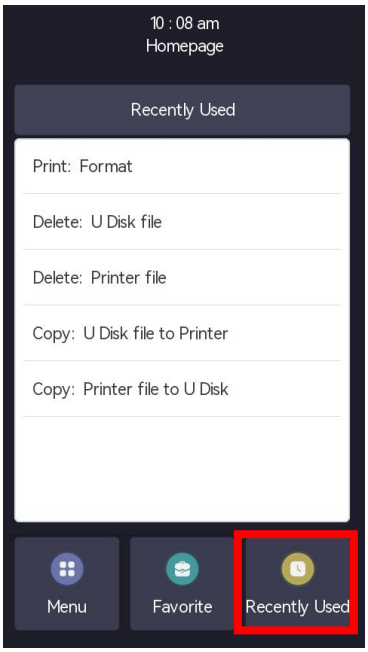

▲Note: For more information about the display menu, please refer to the appendix. The above diagram is for reference only, and the display screen interface is subject to physical machine operation.

3.6 RFID Settings

Select “Menu ”-> "RFID" for parameter settings:

3.6.1 RFID Label Anntenna

1.Select "RFID Label Anntenna".

2.Select AUTO, Antenna Up, or Antenna Down.

3.6.2 RFID Calibration

1.Select "RFID Calibration" ->"Start Calibration".

2.The LCD screen displays (calibration) Detection... and the printer starts calibrating the RFID tag antenna position while also calibrating the antenna power.

3.After successful calibration, the LCD screen displays the return menu settings interface; If calibration fails, the LCD screen will display "RFID Calibration Error", and both the "Ready" and "Error" lights flash simultaneously.

3.6.3 Set RFID Reading Power

1.Select 'RFID Read Power'. Values 0-27

3.6.4 Set RFID Write Power

1.Select 'RFID Write Power'. Values 0-27

3.6.5 Read RFID Data

1.Select "RFID Data".

2.Enter RFID data reading mode and select EPC or TID.

3.Release the printing module, move the RFID tag, and when the RFID tag antenna is within the readable and writable range of the RFID printer antenna, the printer will read the RFID tag data and display

4.Exit RFID reading mode, the printer stops reading RFID tag data.

- To continuously read RFID tag data, after completing step 4, move the tag outward and the printer will automatically read the RFID tag data located at the readable position of the RFID antenna, and di
- The data read by the printer is displayed in hexadecimal format.

3.6.6 Set RFID Encode Position

1.Select 'RFID Encode Position', valid value 0~255 (unit: mm)

Chapter 4 Interface

4.1 USB Interface

USB (Type B)

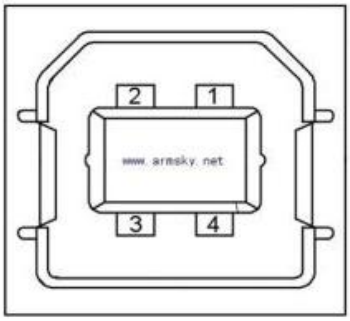

PIN	SIGNAL NAME
1	VBUS
2	D-
3	D+
4	GND

USB Host

4.2 Other Optional Interfaces

■ Serial Port

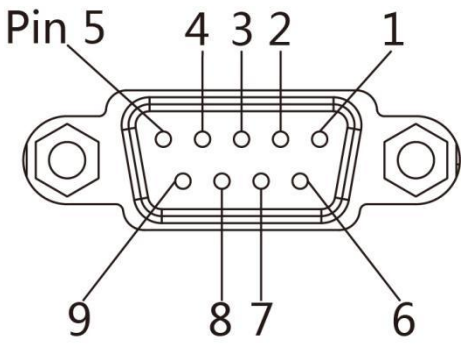

PIN	SIGNAL NAME	SIGNAL DIRECTION
1	-	NO CONTACT
2	TXD	OUTPUT
3	RXD	INPUT
4	-	NO CONTACT
5	GND	GROUNDING
6	RTS	OUTPUT
7	CTS	INPUT
8	RTS	OUTPUT
9	-	NO CONTACT

■ Ethernet Port

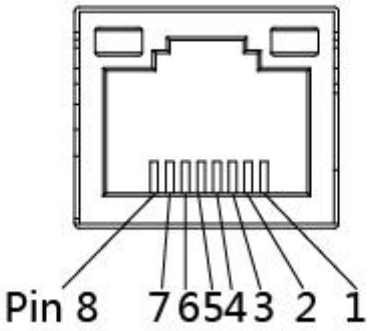

PIN	SIGNAL NAME
1	TX+
2	TX-
3	RX+
4	-
5	-
6	RX-
7	-
8	-

● Parallel Port

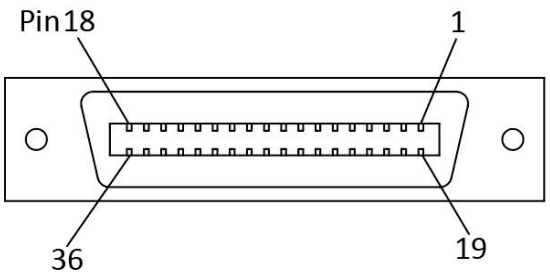

PIN	SIGNAL NAME	PIN	SIGNAL NAME
1	/IEEE1284_STROBE#	19	GND
2	IEEE1284_D0#	20	
3	IEEE1284_D1#	21	
4	IEEE1284_D2#	22	
5	IEEE1284_D3#	23	
6	IEEE1284_D4#	24	
7	IEEE1284_D5#	25	
8	IEEE1284_D6#	26	
9	IEEE1284_D7#	27	
10	/IEEE1284_ACK#	28	
11	IEEE1284_BUSY#	29	
12	IEEE1284_PaperEnd#	30	
13	IEEE1284_Select#	31	/IEEE1284_INIT#
14	/IEEE1284_nAutoFeed#	32	/IEEE1284_ERROR#
15	NC	33	GND
16	GND	34	NC
17	GND	35	NC
18	N/A	36	/IEEE1284_SELECT IN#

■ GPIO Port

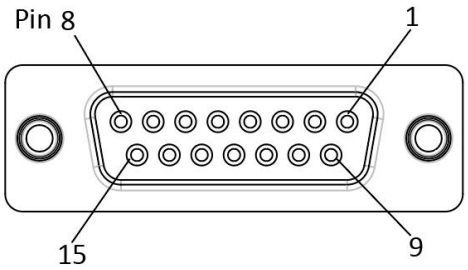

PIN	SIGNAL NAME	SIGNAL TYPE	Definition
1	Media Out	Output	Paper out status is an effective low-level signal
2	GND	Power	Main board system ground
3	Ribbon Out	Output	Ribbon out status is an effective low-level signal
4	Service Required	Output	Effective low-level signal: ● Print head open ● Ribbon out or paper out Printing paused
5	Start Print	Input	**Pulse mode** - converts from high level to low level, and the label starts printing. The signal is invalid, and it is prohibited to print new labels during high voltage periods. **Level mode** - starts label printing when the signal is a valid low level, completes printing and stops when the signal is an invalid high level, and waits for input of a valid low level.
6	Data Ready	Output	● The data reception is completed and the next label is printed as a valid low level Invalid high-level signal: After printing the existing label, it is in a paused state or the label format is missing.
7	-	To be defined	To be defined
8	-	To be defined	To be defined
9	-	To be defined	To be defined
10	Wait Print	Output	Is there any data that needs to be printed? Idle - Low Level Data waiting to be printed - high level

PIN	SIGNAL NAME	SIGNAL TYPE	Definition
11	-	To be defined	To be defined
12	24V	Power	The mainboard provides 24V, current limiting 400mA
13	5V	Power	The mainboard provides 5V
14	-	To be defined	To be defined
15	-	To be defined	To be defined

Chapter 5 Maintenance & Adjustment

Adhesives and coatings of the media can transfer to the printer parts over time along the media path including the thermal print head and media sensor. This build-up can accumulate dust and debris. Failure to clean the print head, media path, and media sensor could result in inadvertent loss of labels, label jams and possible damage to the printer.

Note:

- Make sure to turn off the printer prior to cleaning.
- As the print head gets hot during printing, if intending to clean the print head, turn the printer off and wait approximately 2~3 minute before commencement.
- When cleaning the print head, take care not to touch the heated portion of the print head. Print Head is susceptible to damage from static electricity, etc. It is strongly recommended to wear hand gloves during cleaning progress.
- Take care not to allow the print head become scratched and/or damaged in any way.

5.1 Cleaning Thermal Print Head

Thermal Paper stock on the print head, which degrades print quality. Clean the print head with methanol or isopropyl alcohol and a cotton bud. Do not touch the heating elements with your fingers.

1) Open the Printer Cover and then use the cleaning pen to clean the head in the direction from the center of the head to two sides.
2) After cleaning the head, do not use the printer until the alcohol used for cleaning evaporates completely (1~2 min) and the printer has completely dried.

3) Perform the cleaning process each time the paper roll is replaced to prevent print quality deterioration.

5.2 Cleaning Roller and/or Paper Path

1) Open the printer cover and then remove the paper.
2) Remove any dust or foreign substance using dry cloth or cotton swab.
3) Soak the cloth or cotton swab in alcohol for medical use and use it to remove adhesive foreign substances or other pollution materials.
4) After cleaning the parts, do not use the printer until the alcohol evaporates completely (1~2 min) and the printer has completely dried

Note: Clean the parts when print's quality or label detection degrades.

Chapter 6 Printer Utility Tool Instructions

6.1 Installation Preparation

Download application program in CD. E.g.iDPRTUtility.exe

6.2 Usage

Note: The screen may vary slightly by different operating systems and models. The following example is based on the Windows 7 operating system.

1.Install “iDPRTUtility.exe”, then open it.

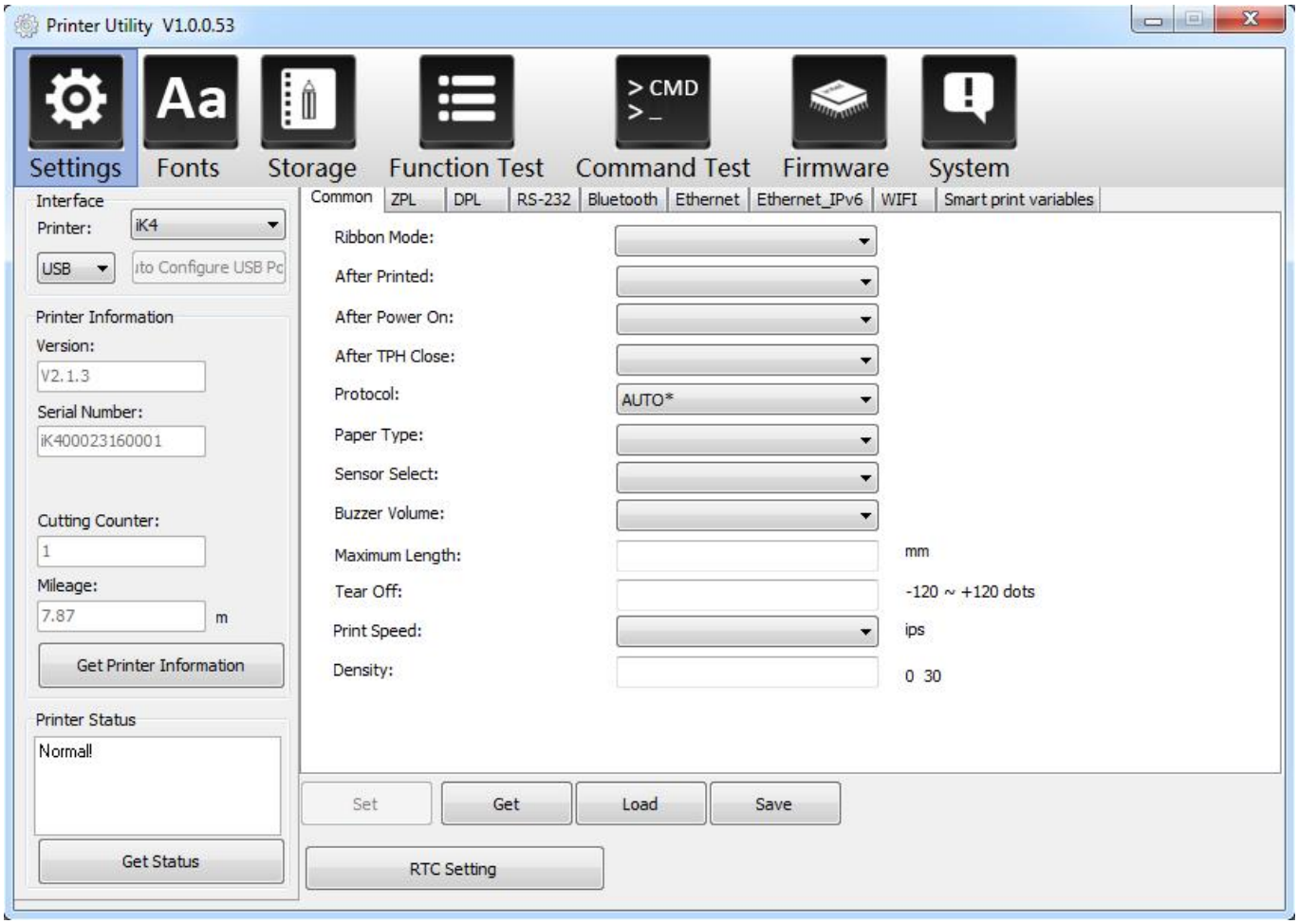

2.Click “Settings”.

(1) Set up the interface needed. (range: USB, COM, LPT, ETH)

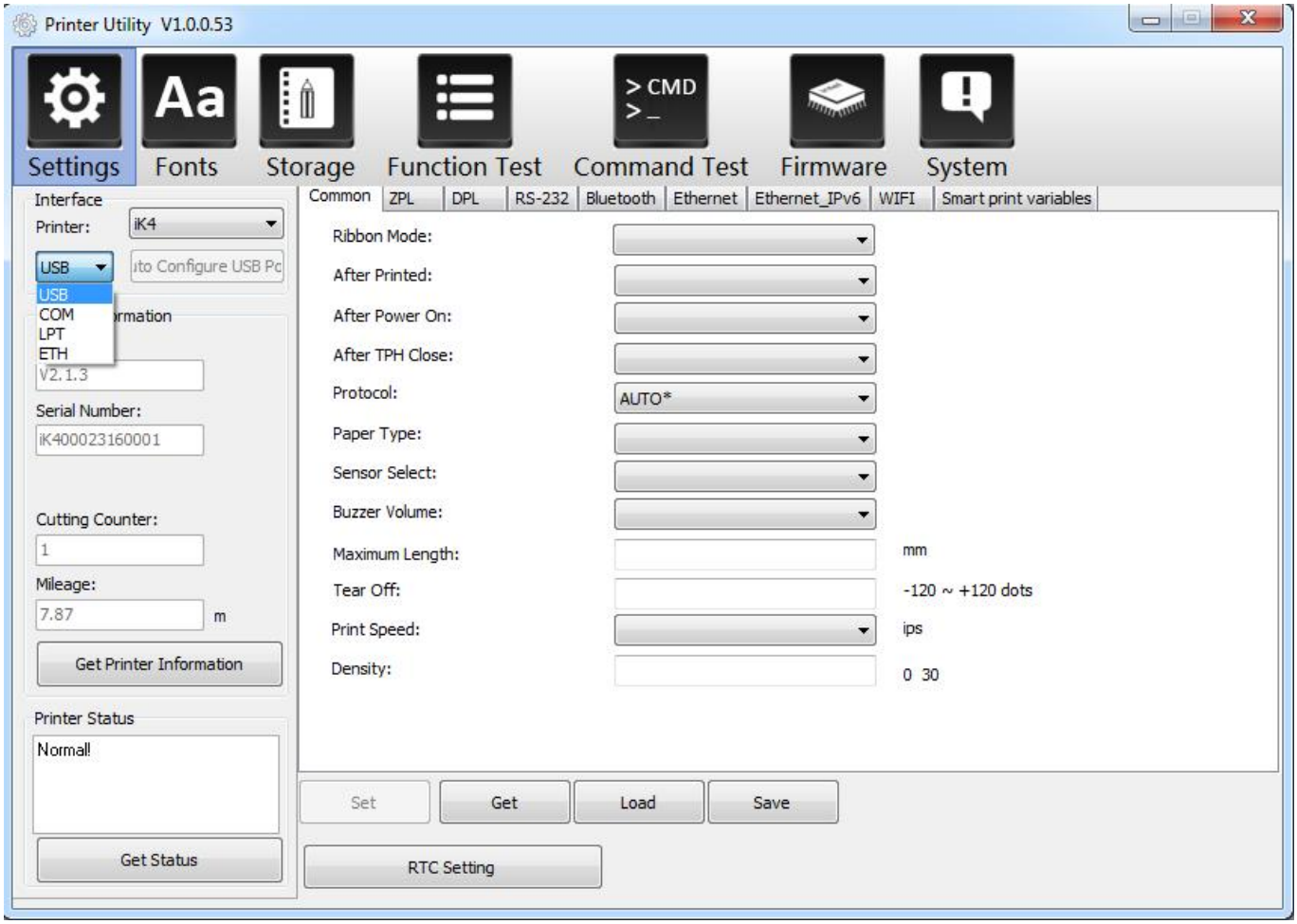

(2) Click “Get Printer Information”, and printer information will show in the above.

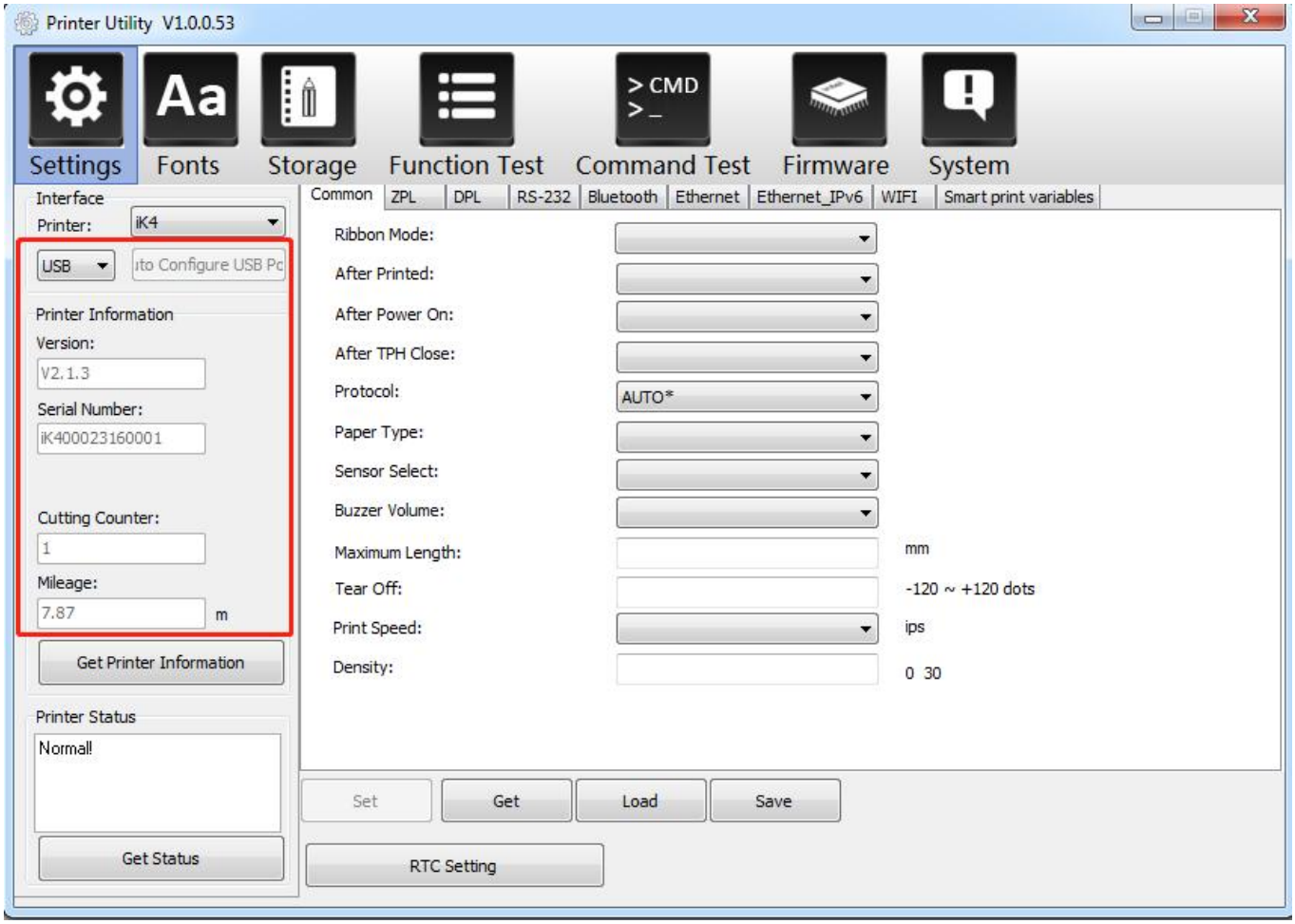

(3) Click “Get Status”, and printer status will show in the above.

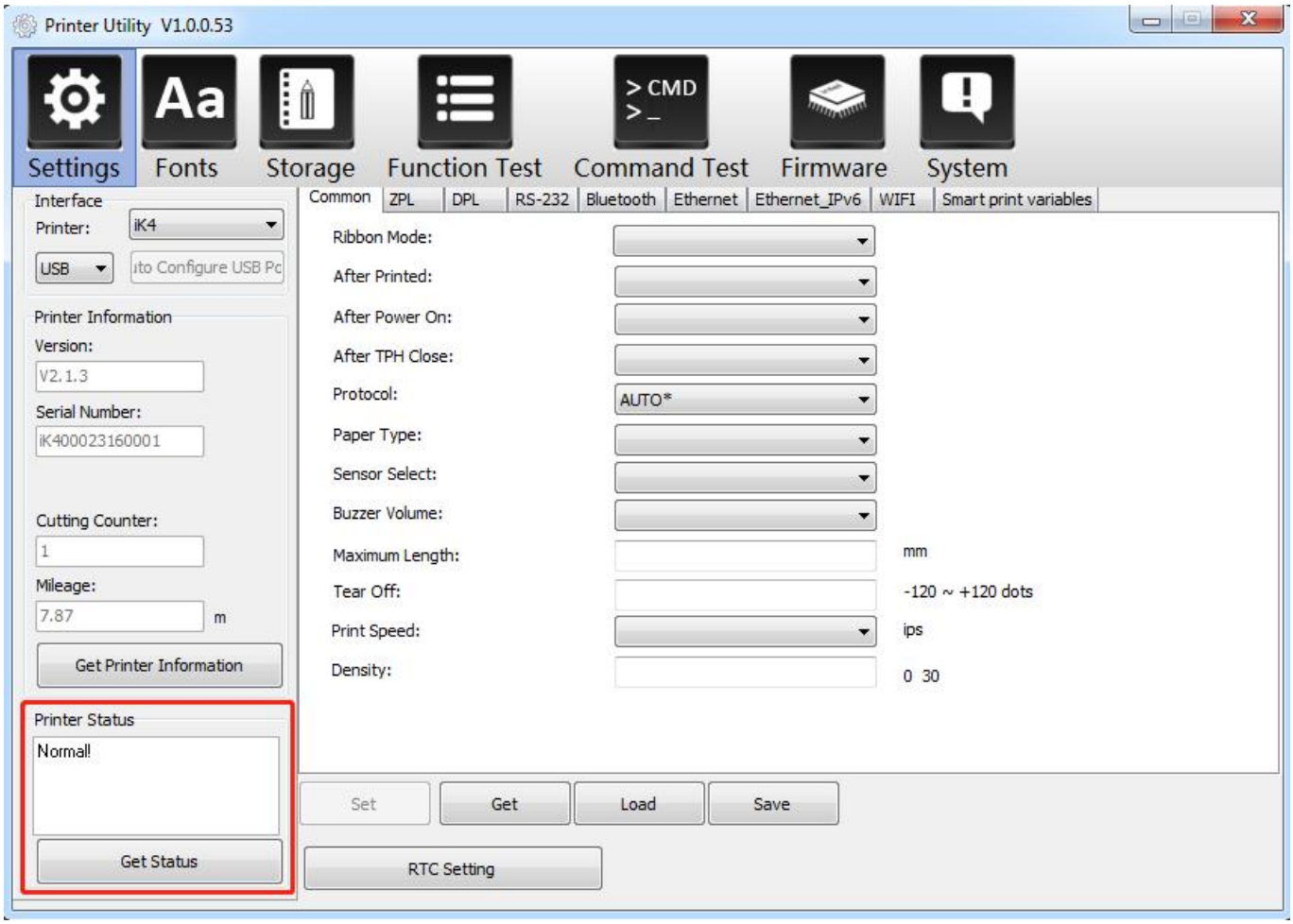

(4) Click “Common”. In this menu, user can set up the protocol, media sensor, speed, density and so on.

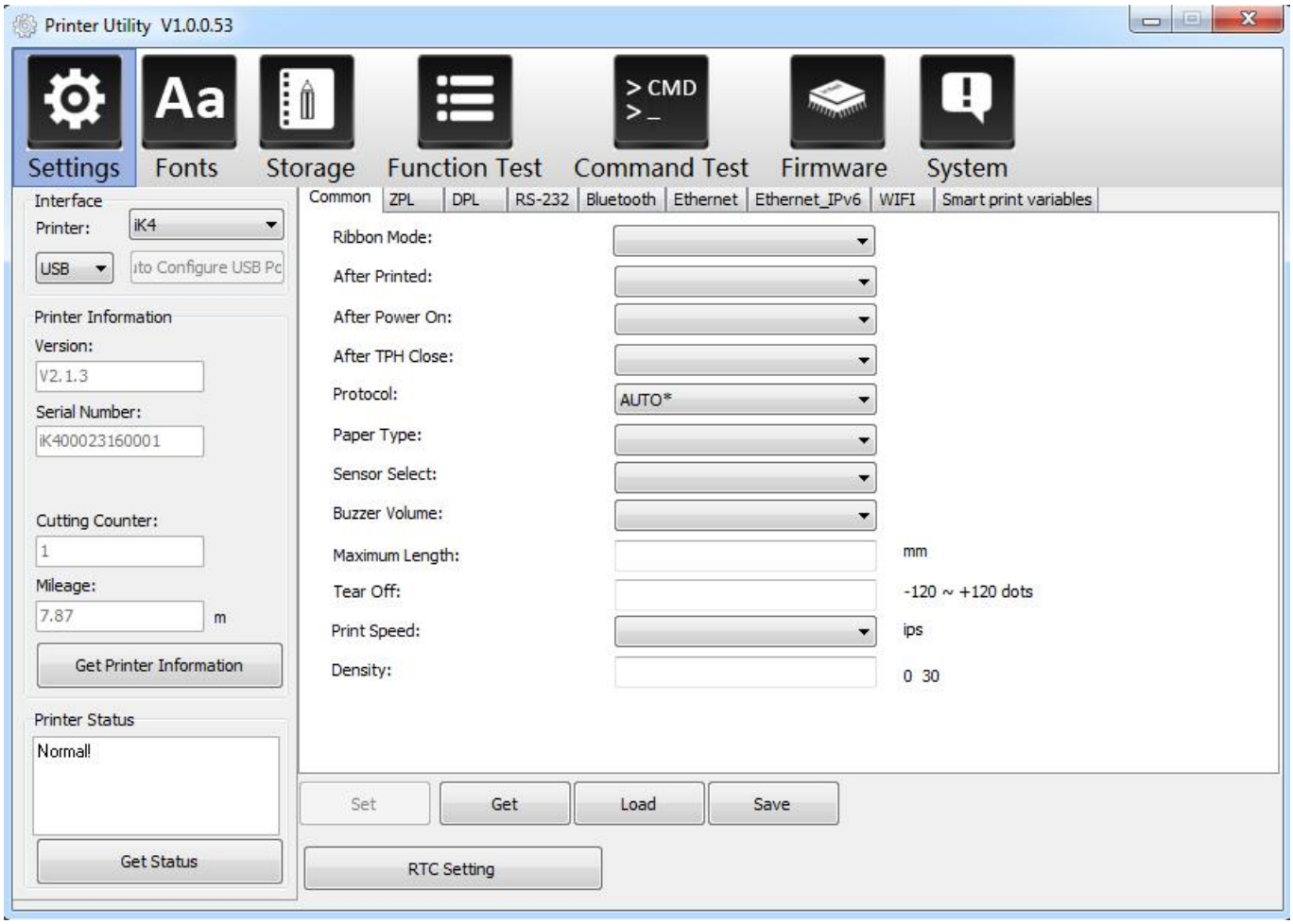

(5) Click “RS-232”, then set up the baud rate, data bits, parity and flow control.

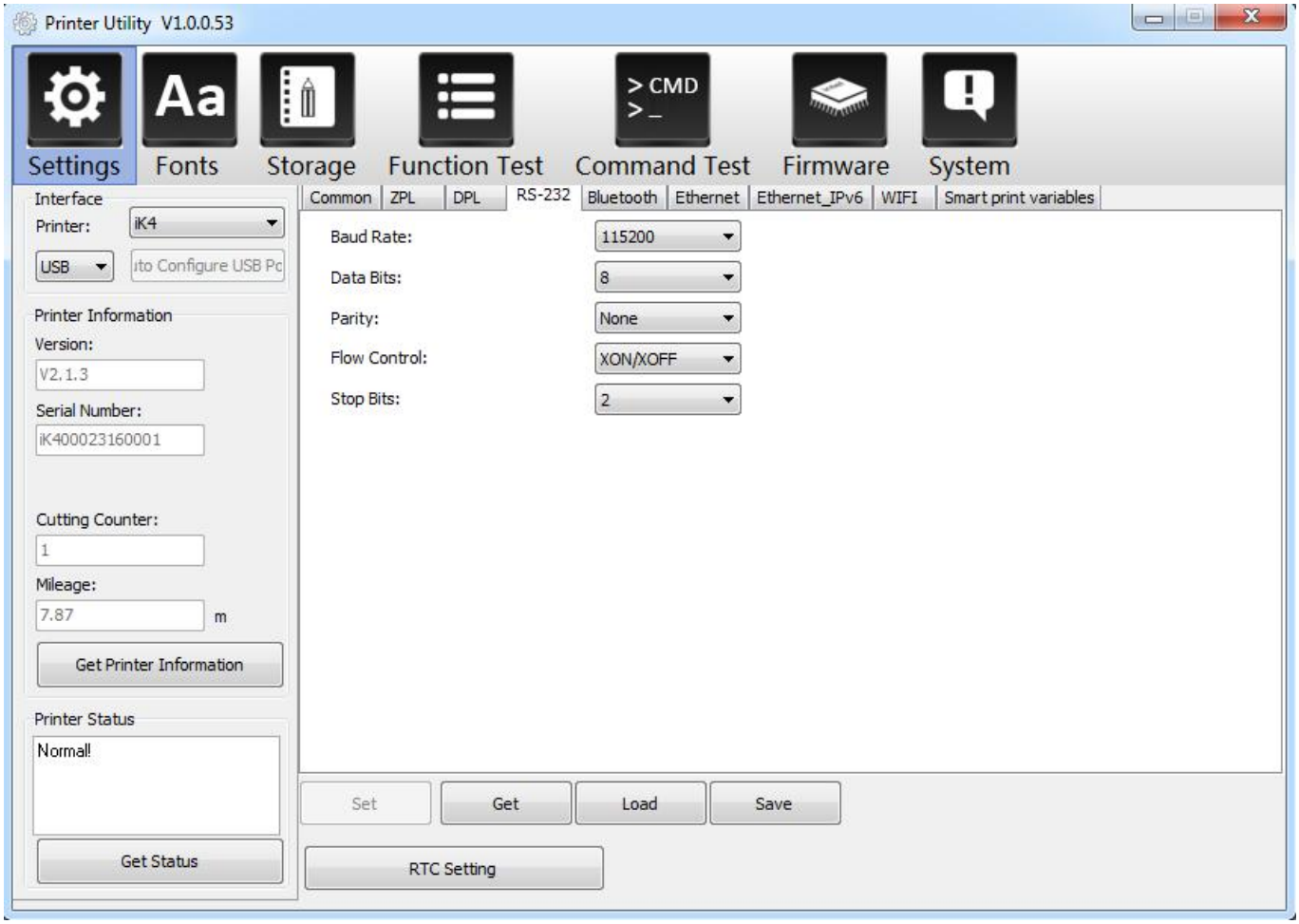

(6) Click “RS-232”, then set up the parameter, or click “Get” to gain the values of Mac address.

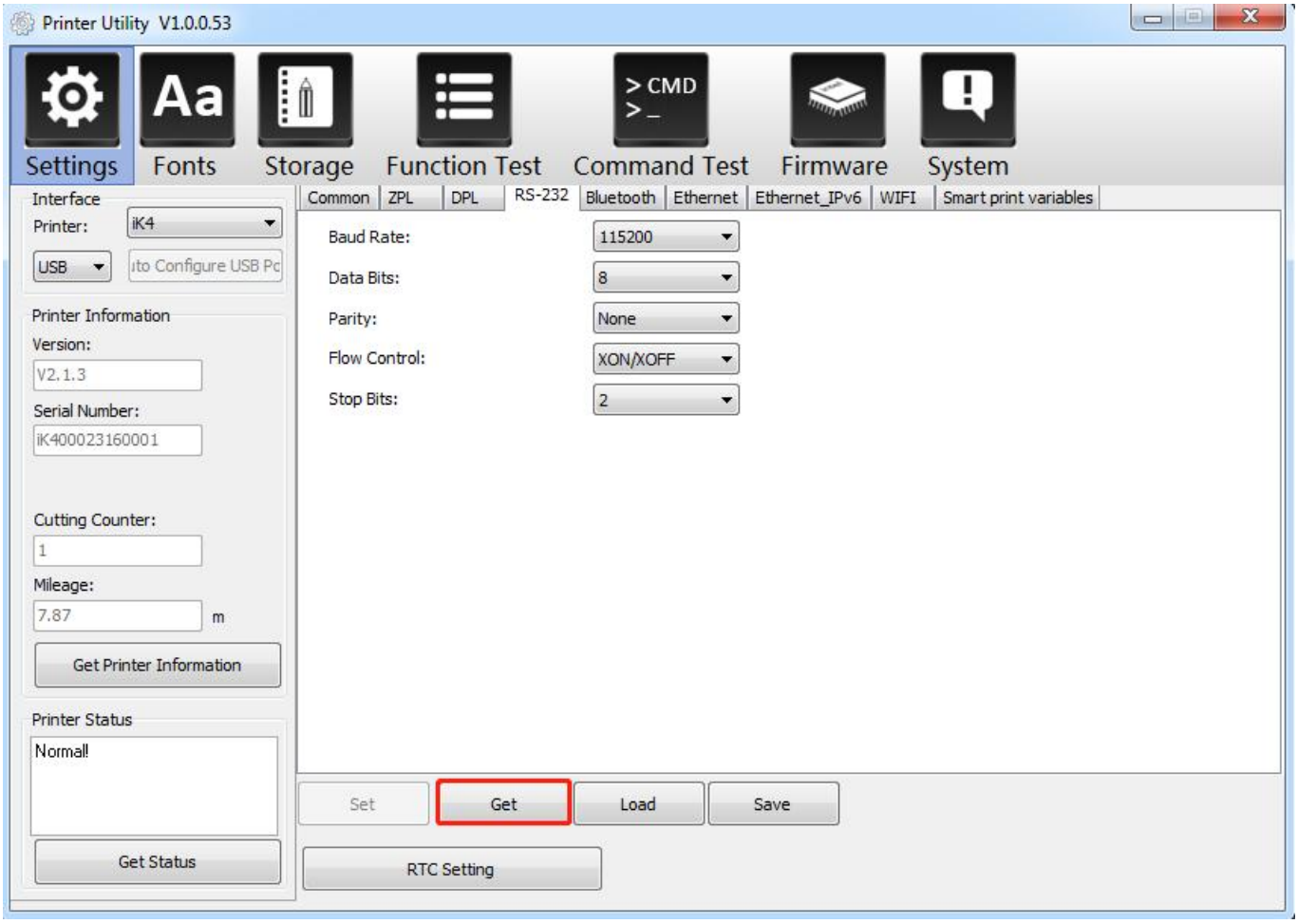

(7)Click “Ethernet”, then click “Get” to gain the relevant values.

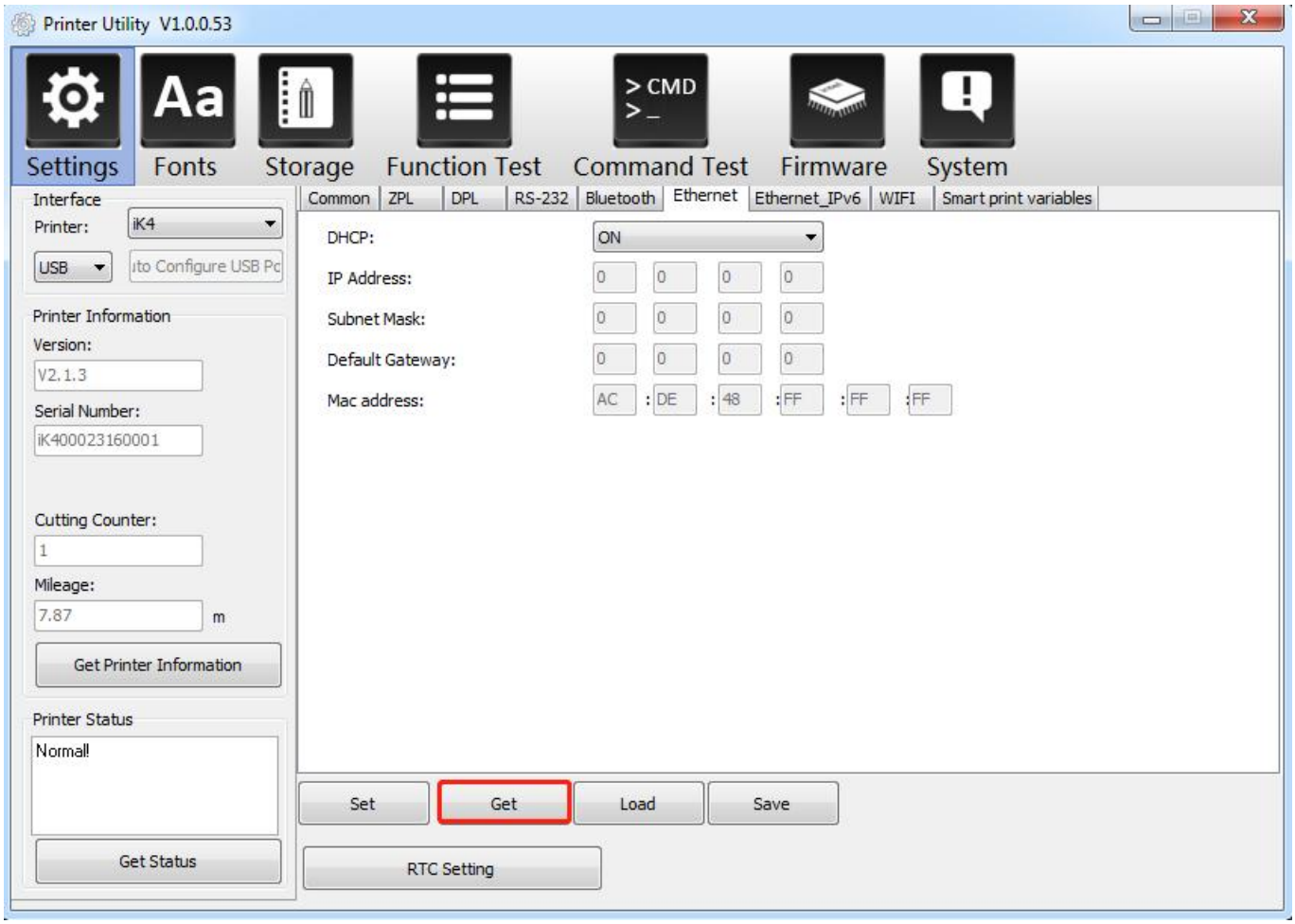

(8)Click “WIFI”, then set up the name, password and so on.

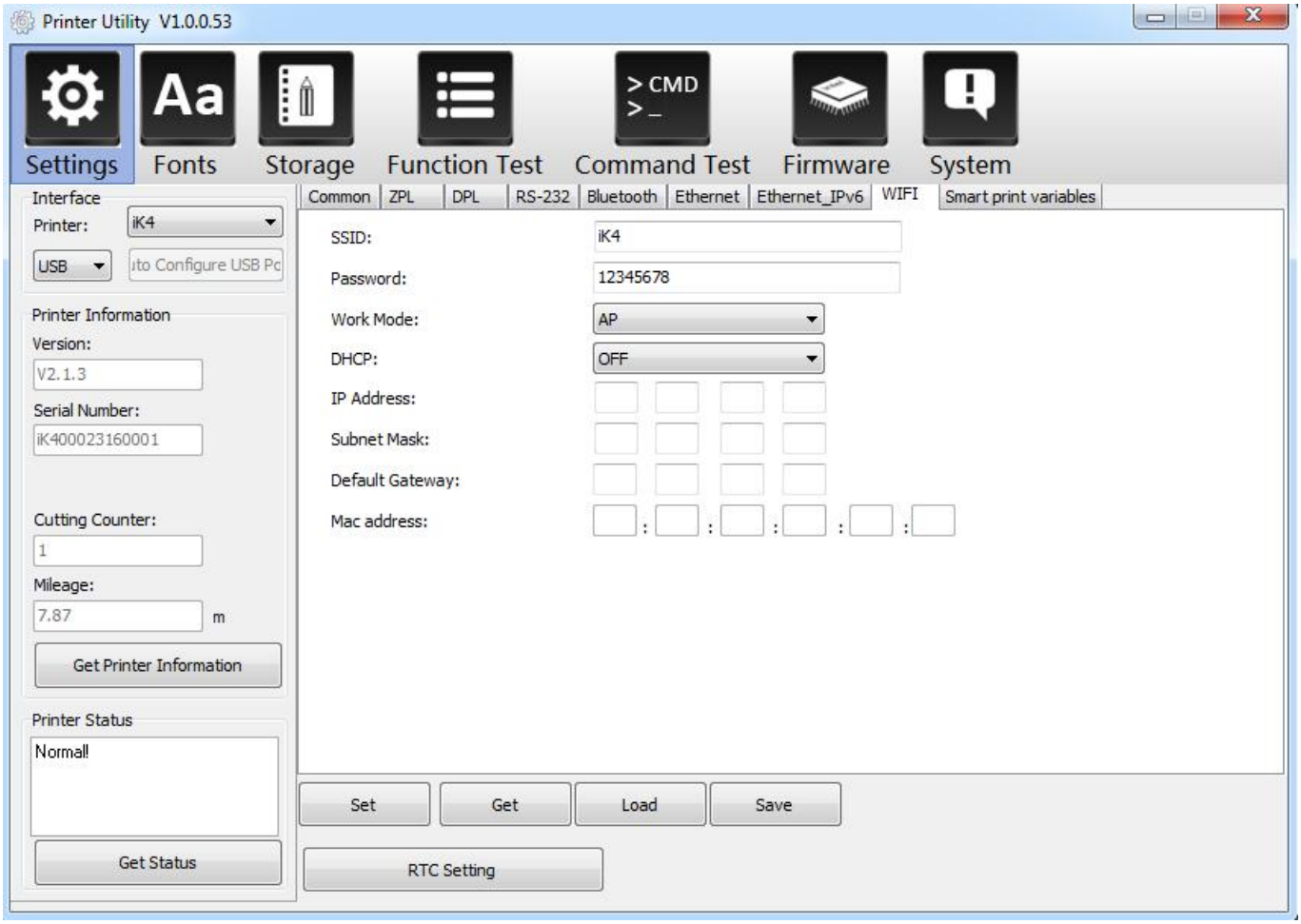

(9)Click “RTC Setting”. Click “Get System DateTime” to get the values, and click “Setup” to save them. Then click “Close”, and back to the main menu.

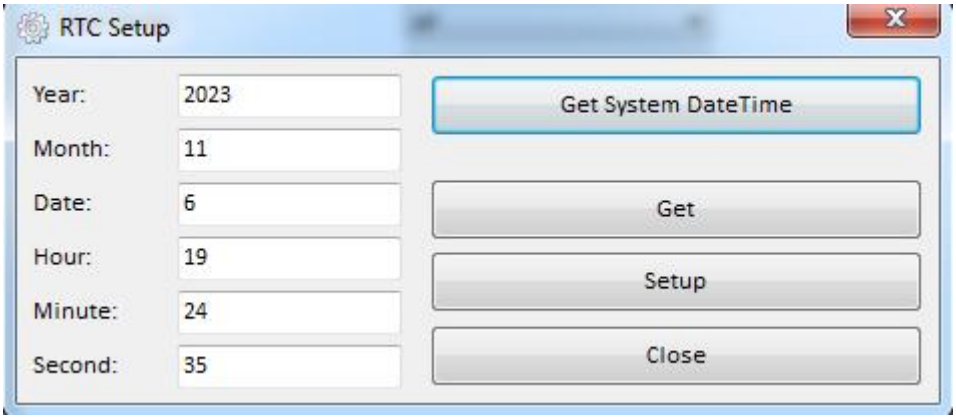

Note:

① **Finishing all the settings, user can click “Set” to save the values changed.**

② **Click “Get”, and user will get the default values.**

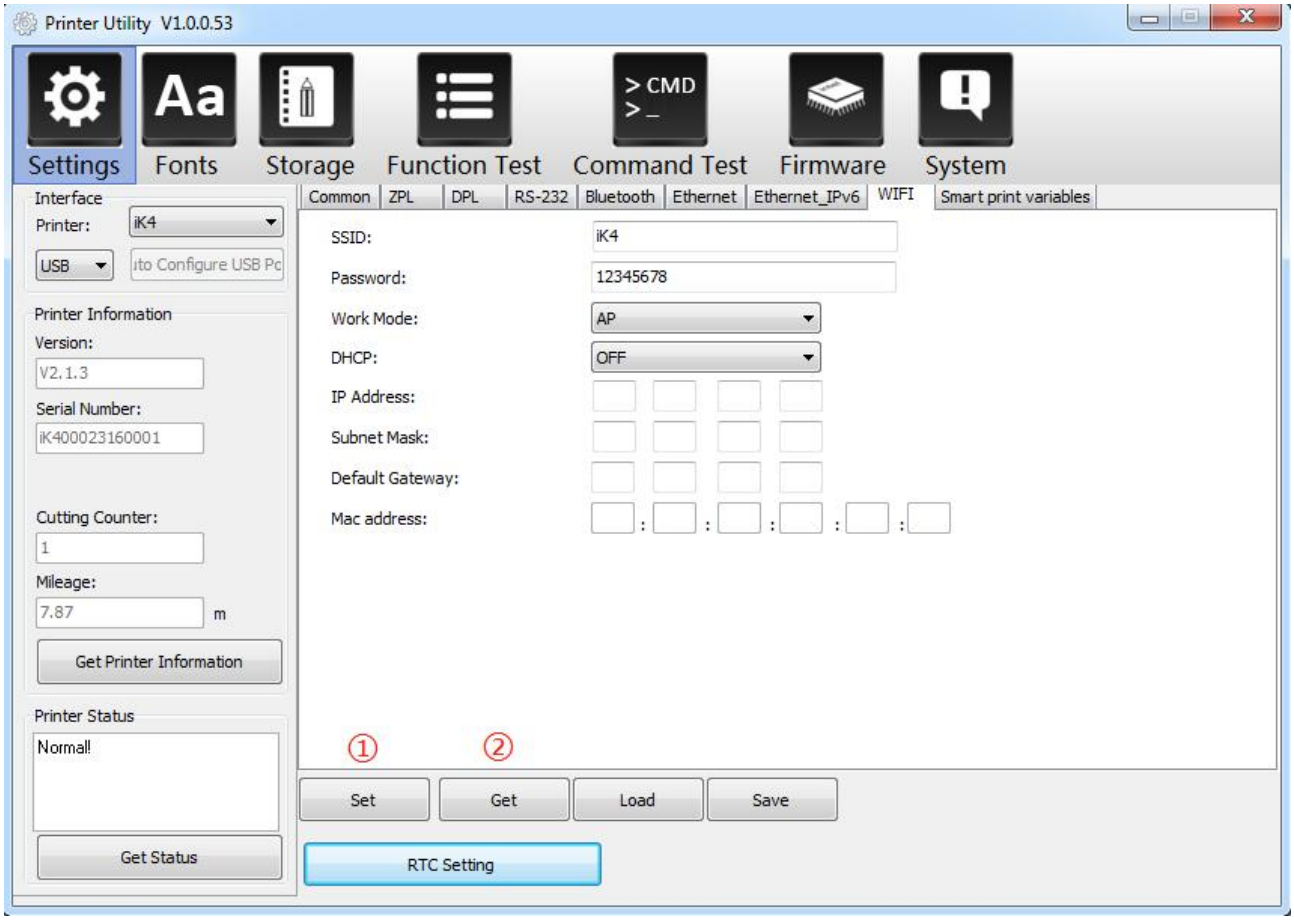

3.Click “Storage” to print image.

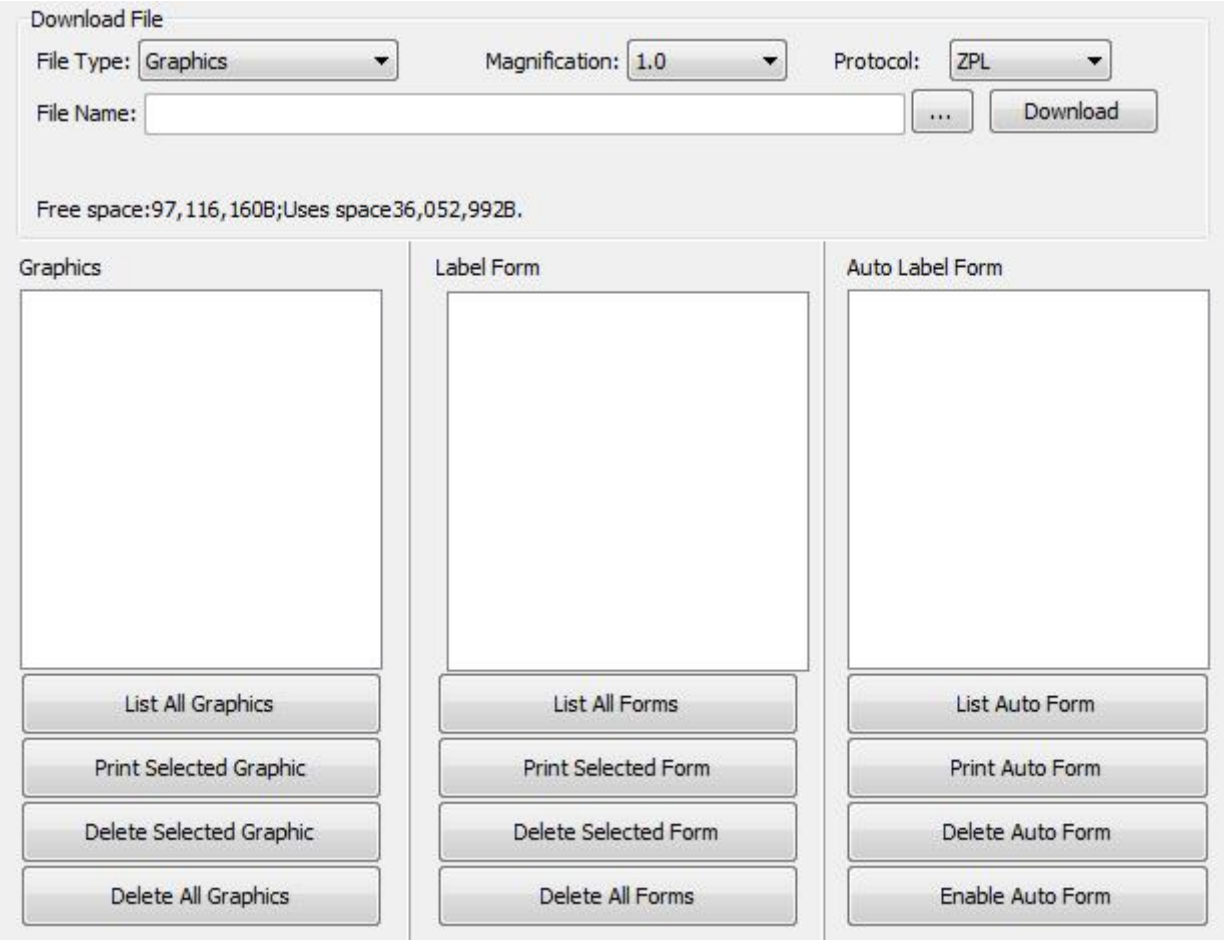

(1) Click "File name" to select the image.

Note: The file name must be in English or number, and the filename length must be less than 32.

(2) Click “Download”.

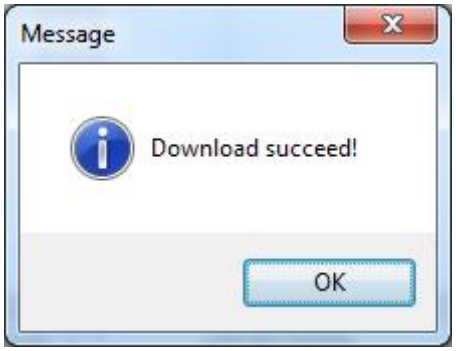

(3) Select the downloaded graphic, and then click “print selected graphic”to print the picture.

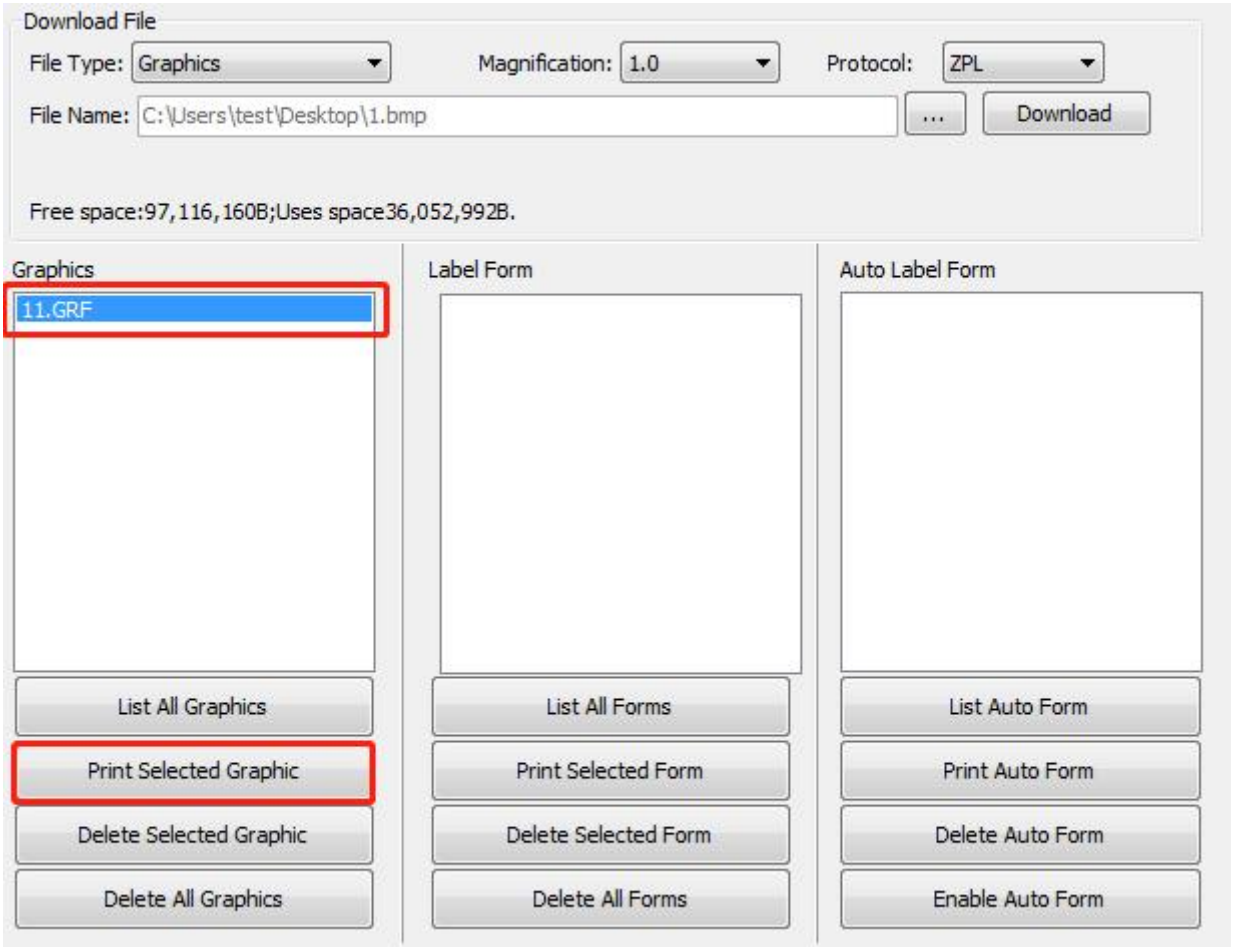

(4) You can set a magnification of the graphic as needed.

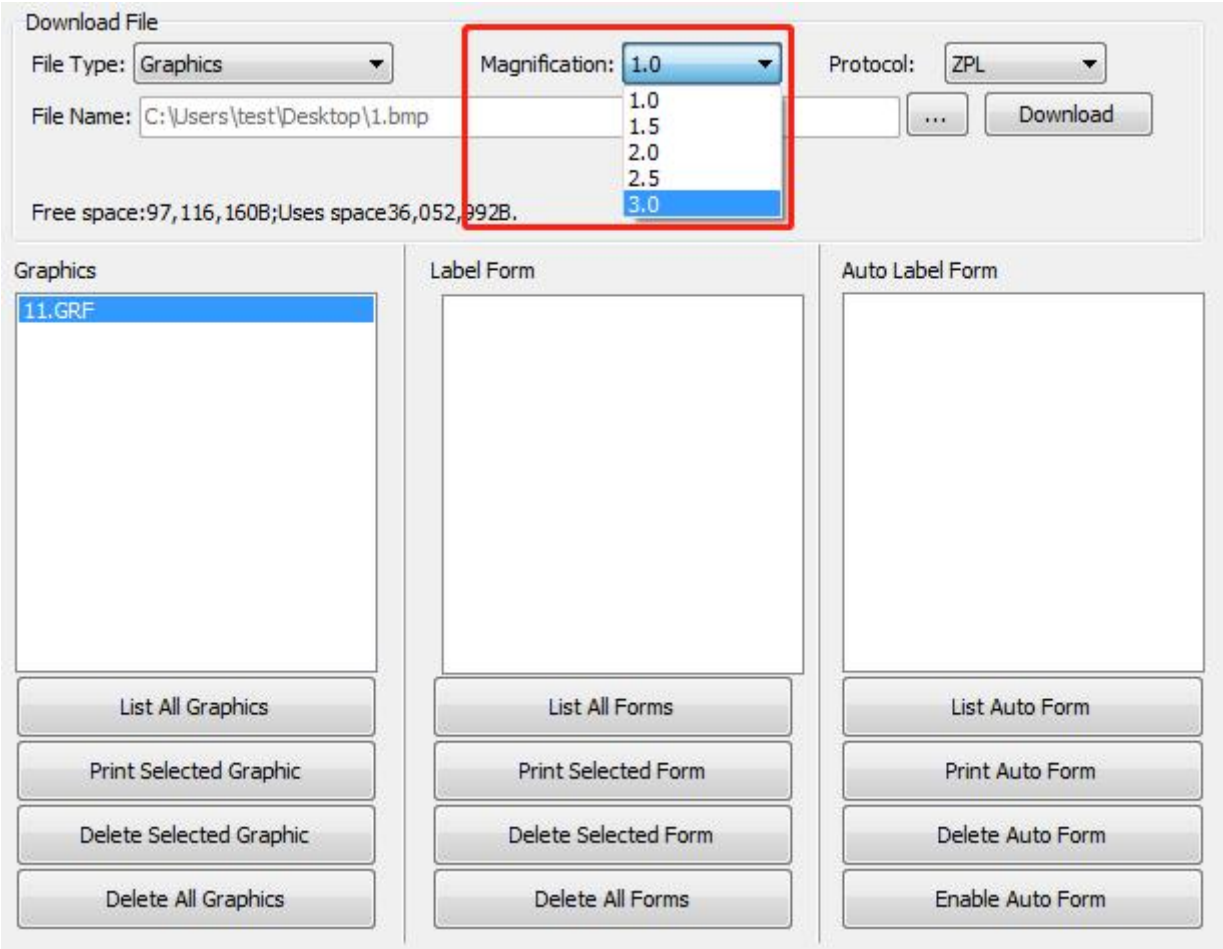

4.Click "Fonts".

(1) Click "Select Font" to select the vector font you want.

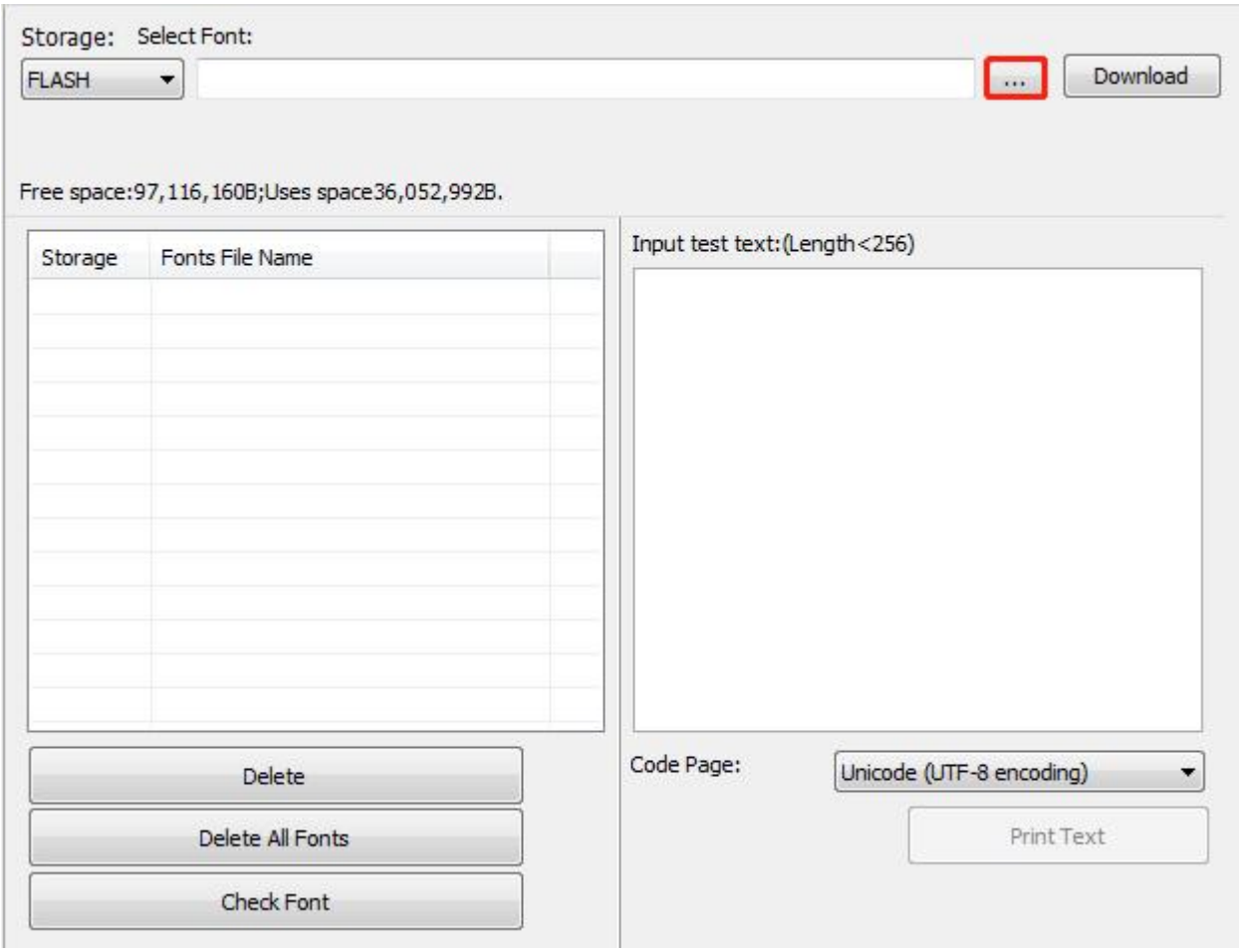

(2) Click "Download" (Note: The font file name must be in English or number).

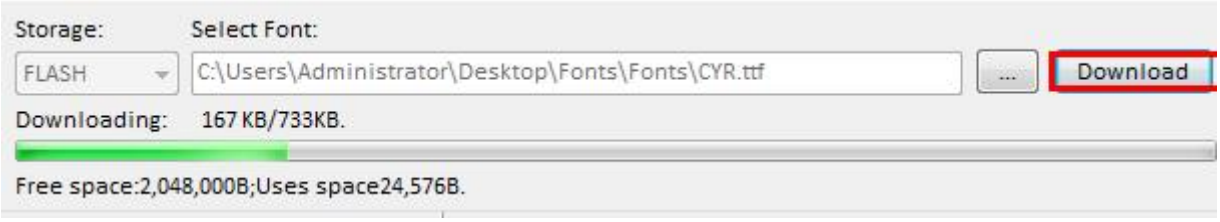

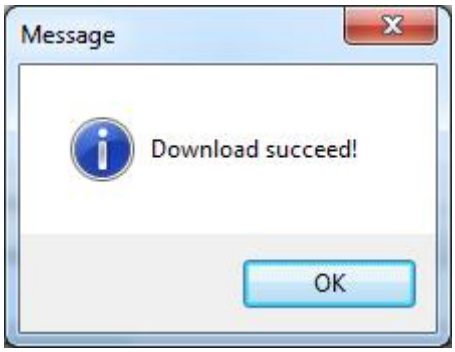

(3) Select the downloaded font file, enter the print content in the text box, and click “Print Text”.

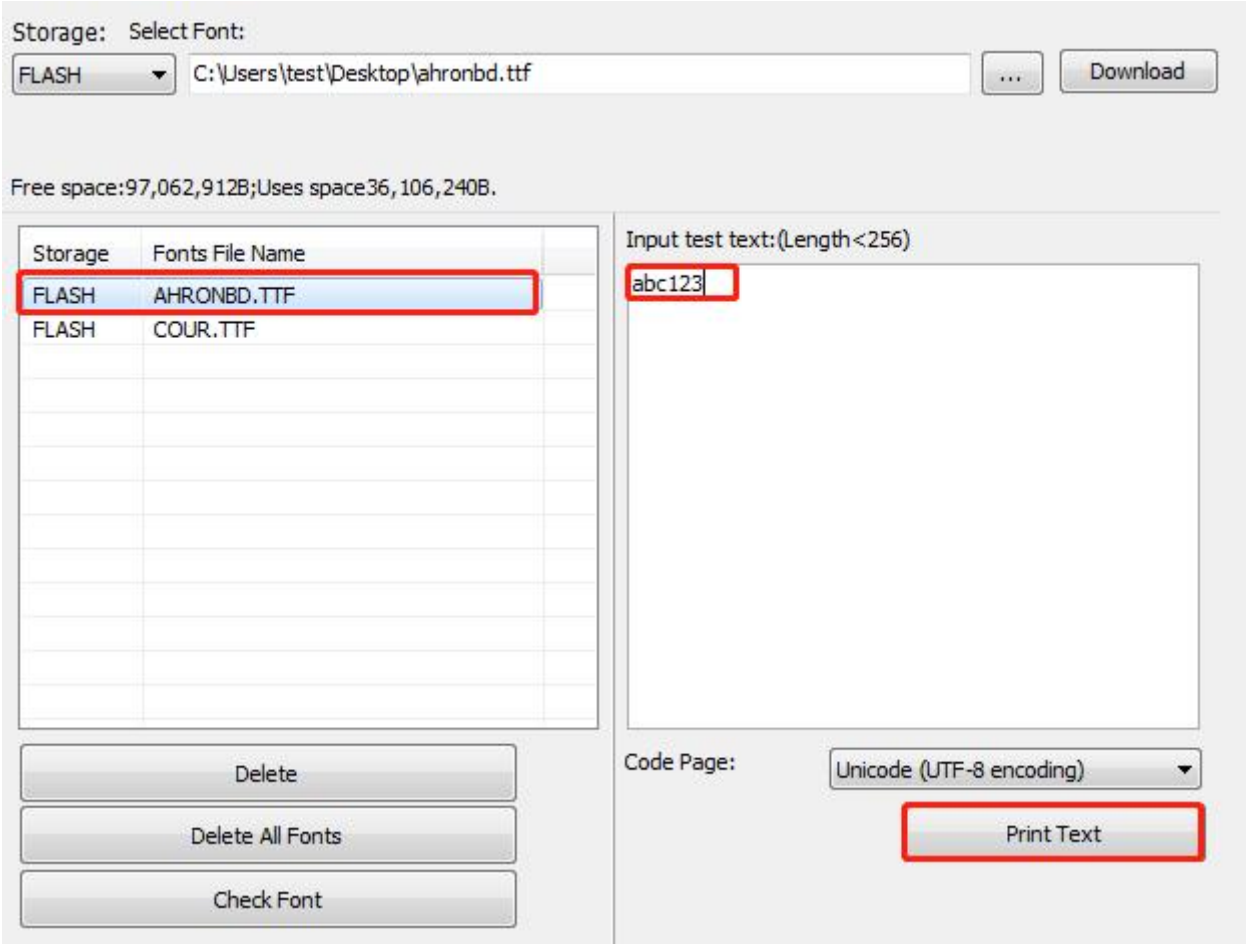

5. Click “Function Test”. User can carry the followings such as sensor calibration, pattern print testing and so on.

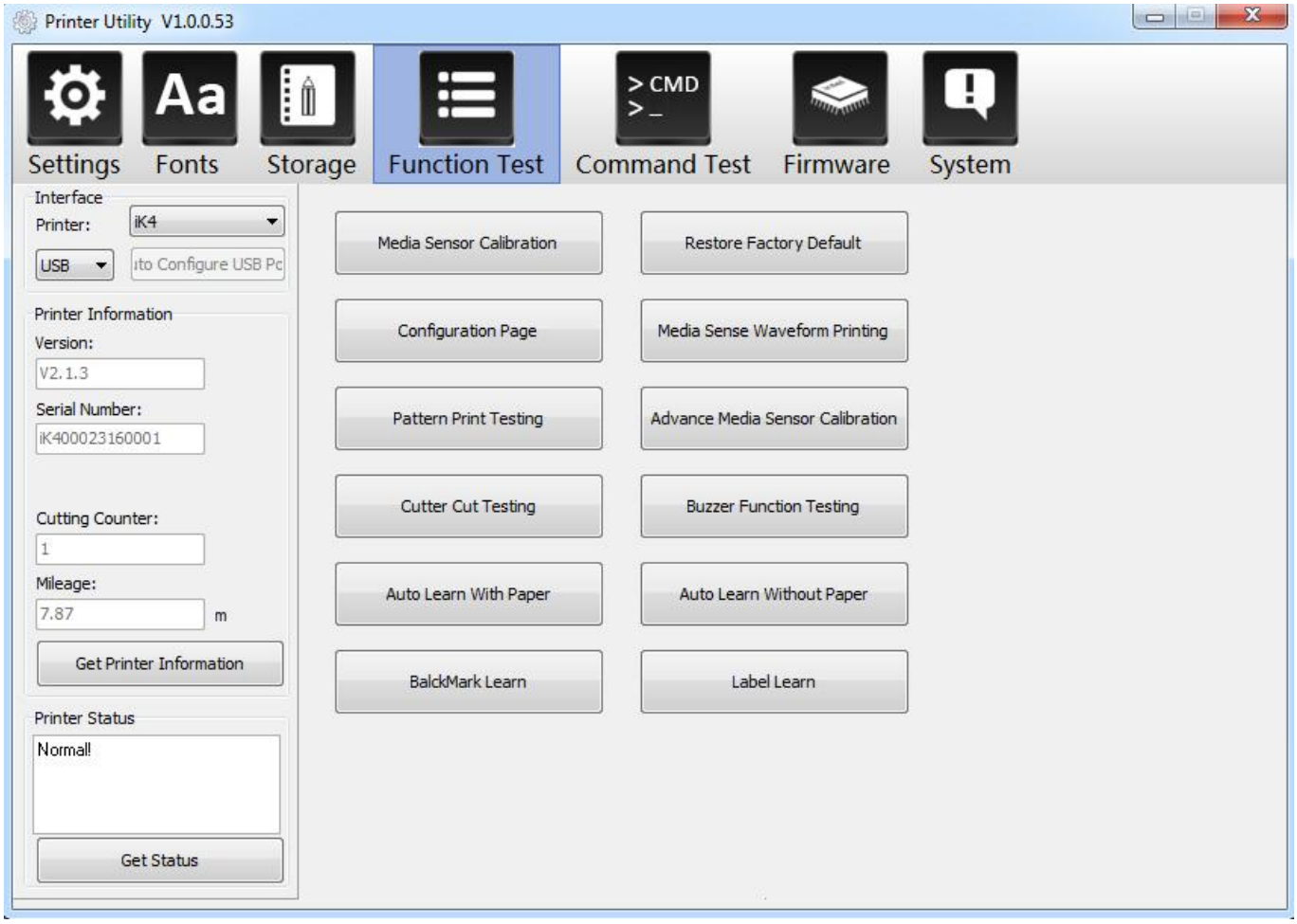

6. Click “System”. Click “language” and choose the language of printer utility.

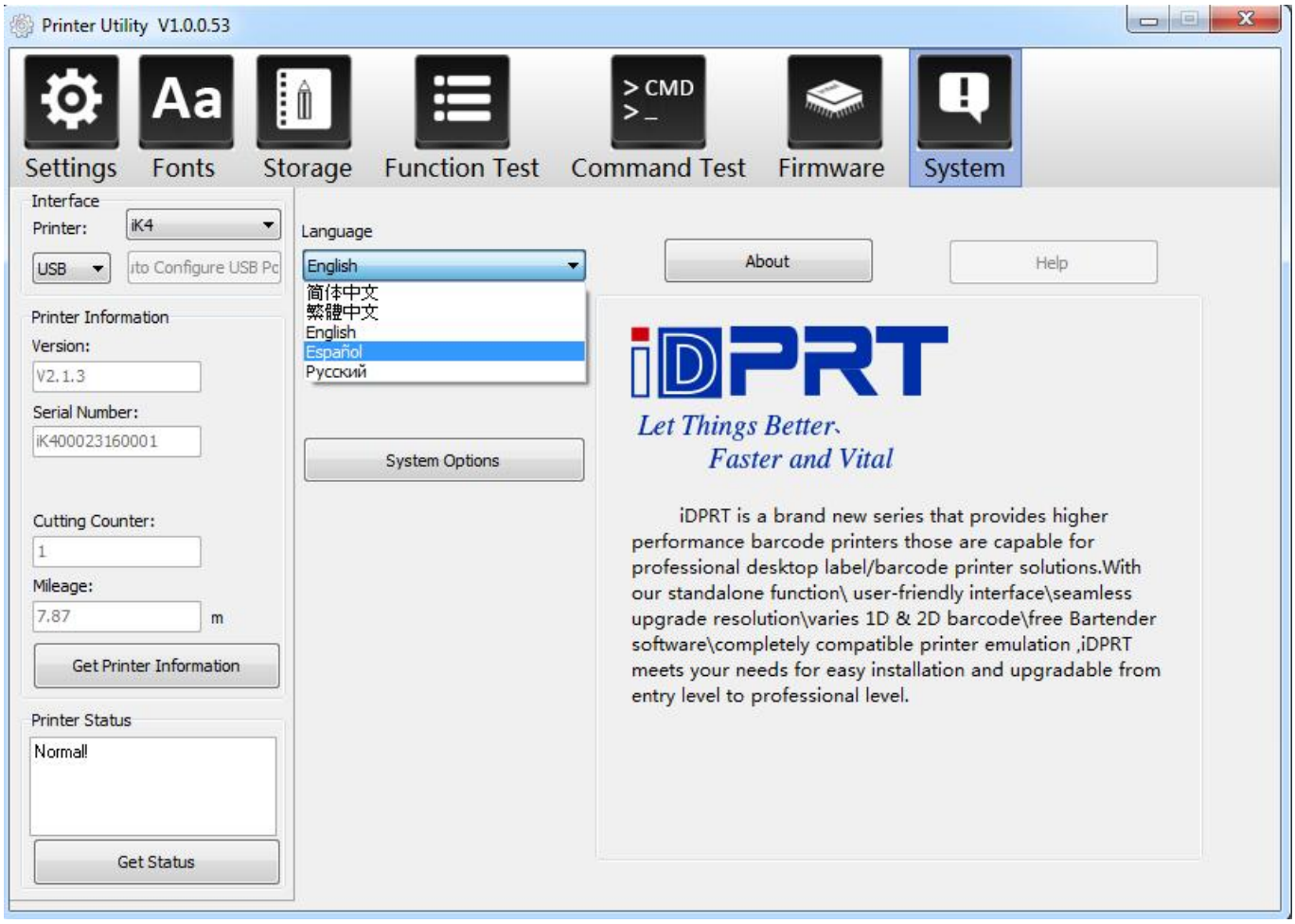

Chapter 7 Seagull Windows Driver Instructions

7.1 Introduction

The following operating systems are supported:

- Windows 7, Windows 8, and Windows 10.
- Windows Server 2008, and 2012.
- 32-bit and 64-bit（x64）editions.

7.2 Installation Preparation

Download Seagull Windows Driver application program in CD.

7.3 Installation

Note:

- **Under different operating systems, the screen may be slightly different. Take Windows 7 as example.**
- **To avoid the prevention, recommend to close the security software before installation.**

1.Select one interface to connect your printer to computer.

2.Turn on the printer and check if it is connected to computer successfully.

3.Double click Seagull Windows Driver.

4.Read and agree the license agreement. Then click “Next”.

5.Choose the installation directory, then click “Next”.

6.Click "Finish".

7.Choose "Install printer drivers", then click "Next".

Note: If you have connected the printer to computer, it will detect and install the driver automatically. (e.g.: USB port)

8.Choose model, then click "Next".

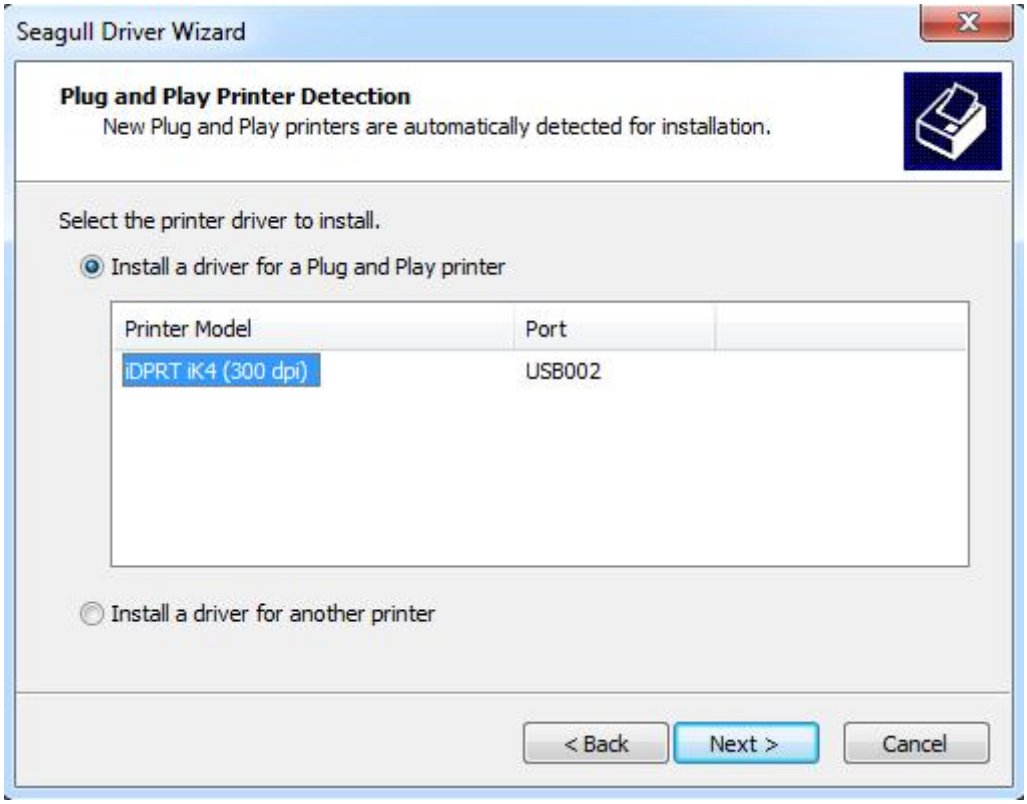

9.Enter a name for this printer, then click "Next".

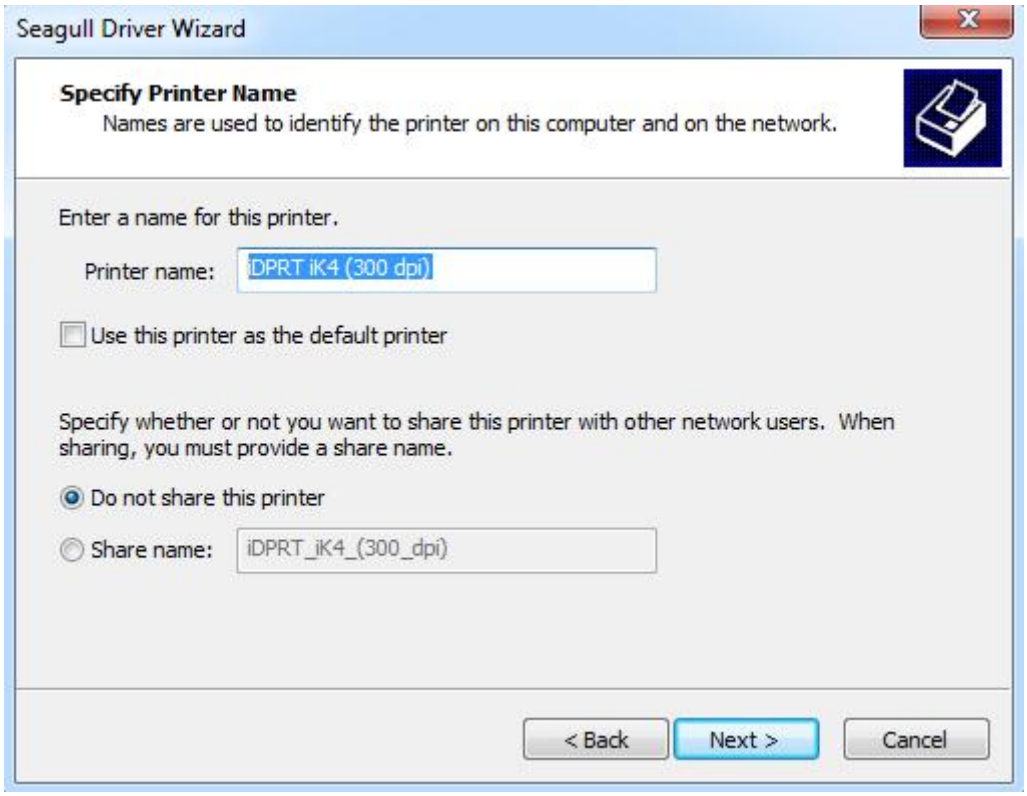

10.Click"Finish".

11.Click "Close", and the driver is installed successfully.

12.After installation, the icon will be found in “Start” → “Devices and Printers”.

Note:

- **If you have already installed the driver (No matter what kind of ports), it will generate a USB port automatically when connecting the printer to computer.**
- **Any problems exist, please use our utility tool in CD.**

7.4 Usage

7.4.1 Printing Preferences

1.Click “Start” → “Devices and Printers”. Right click icon and choose “Printing preferences”.

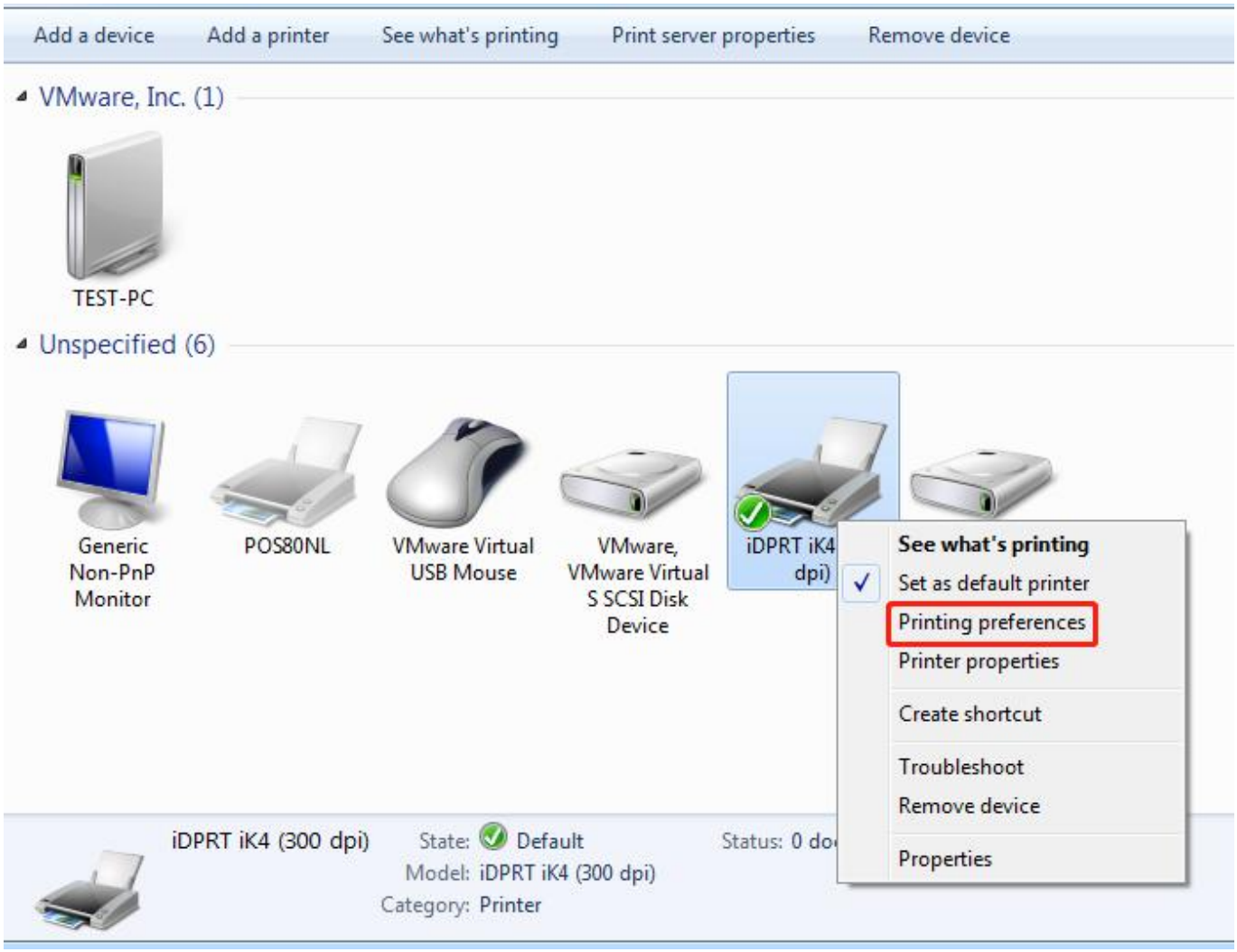

2.According to different needs, set up the page.

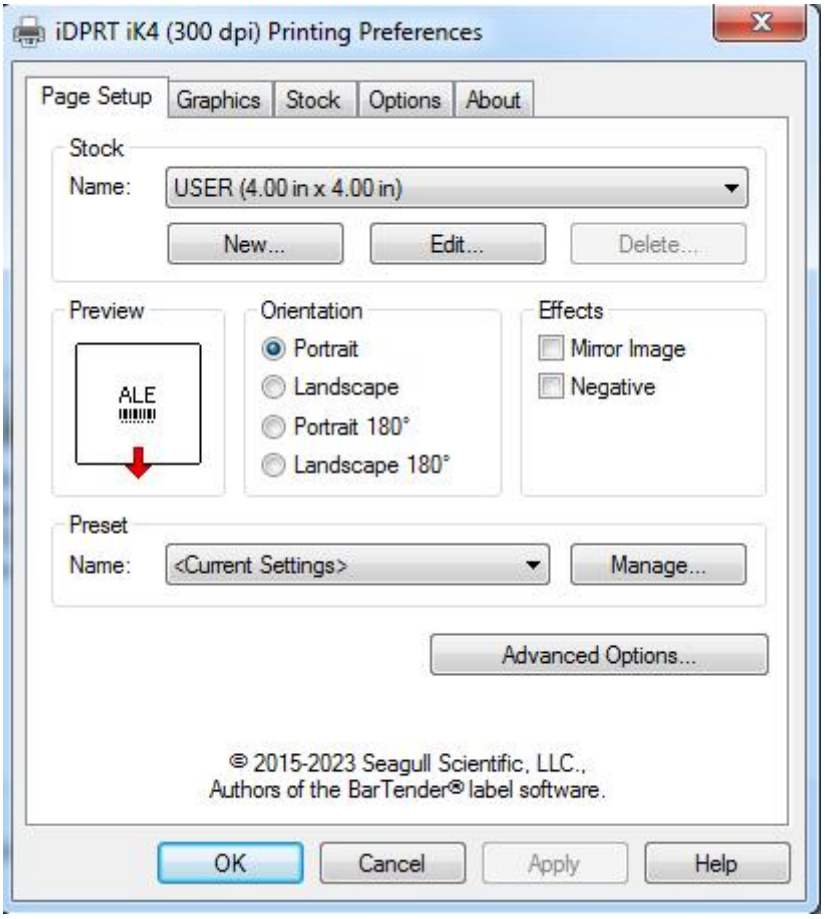

●Click “Stock” → “Name”, and choose the paper type.

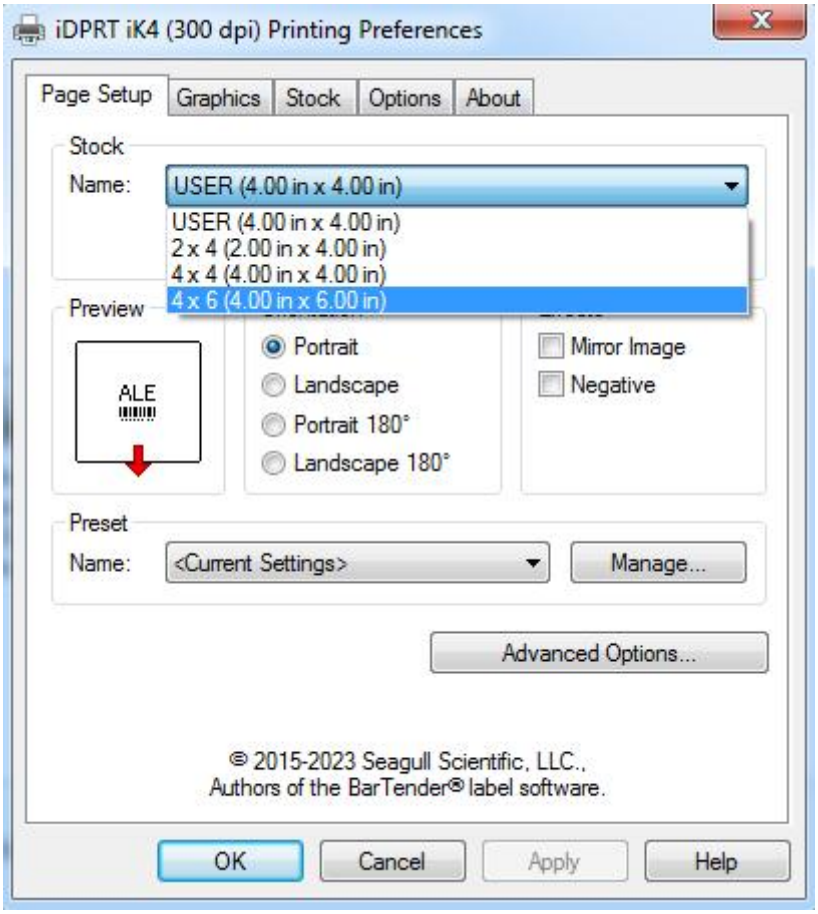

●Click “New Stock”, and set up a new stock.

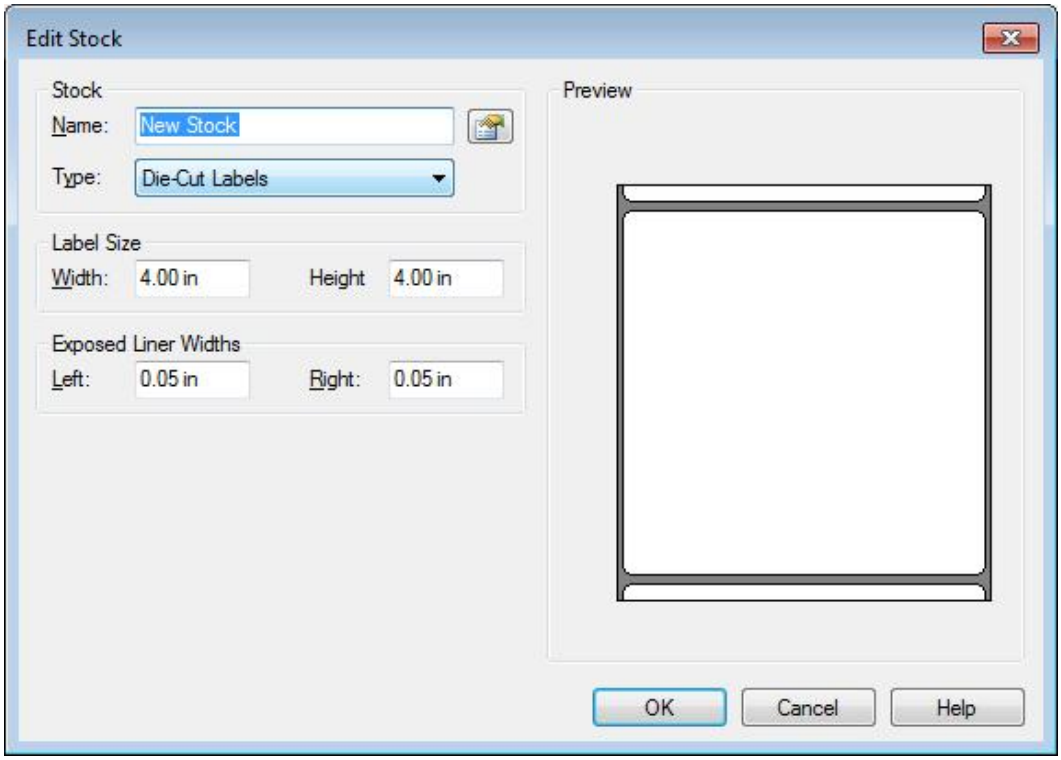

●Click “Edit Stock”, and edit the stock.

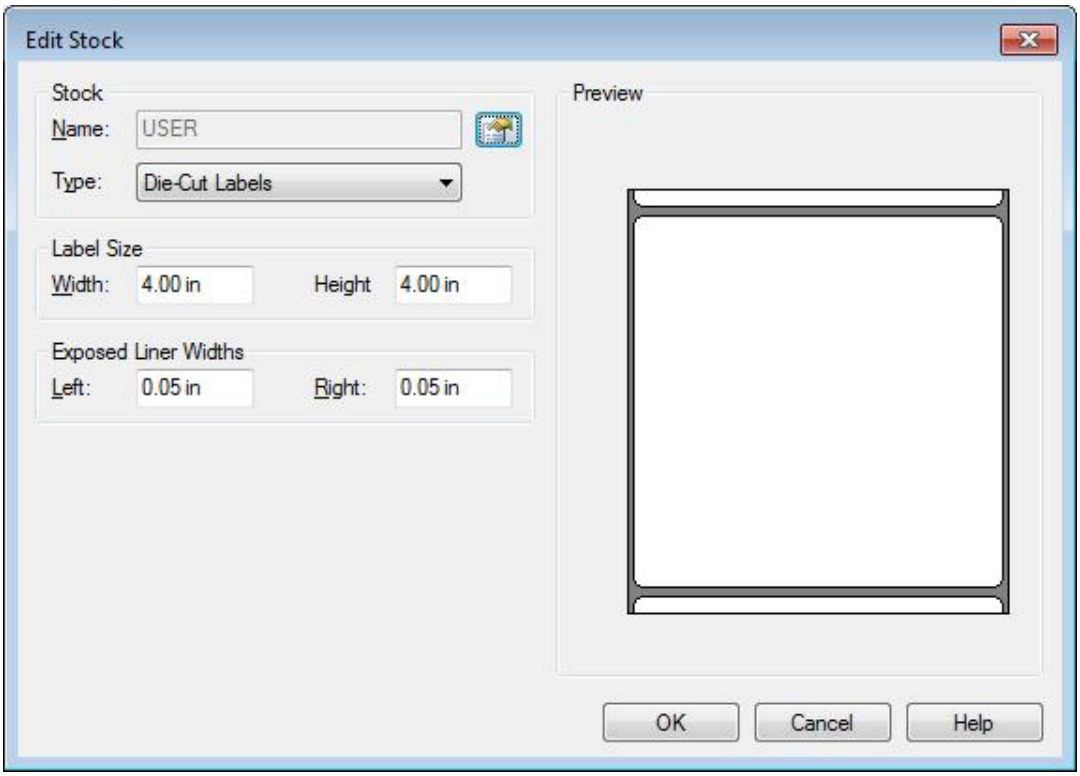

●Click “Delete Stock”, and delete the stock.

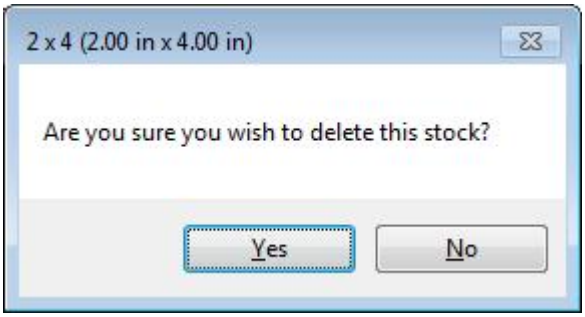

●Choose “Orientation” or “Effects”, showed in the “Preview”.

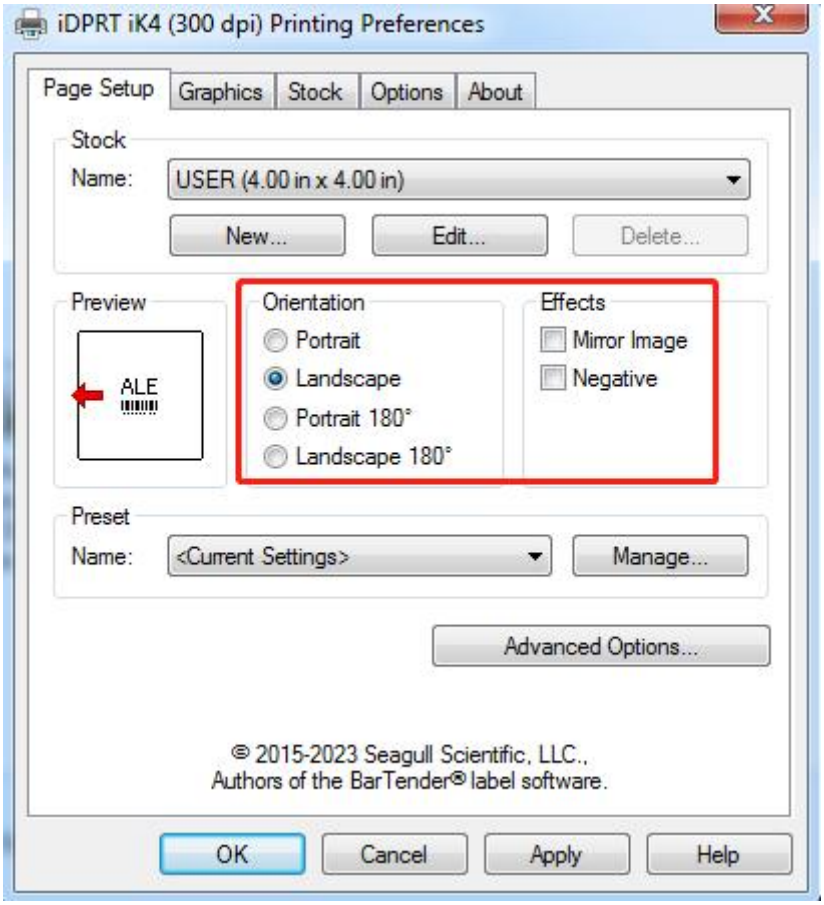

●Click “Preset” → “Name”, and back to the default settings.

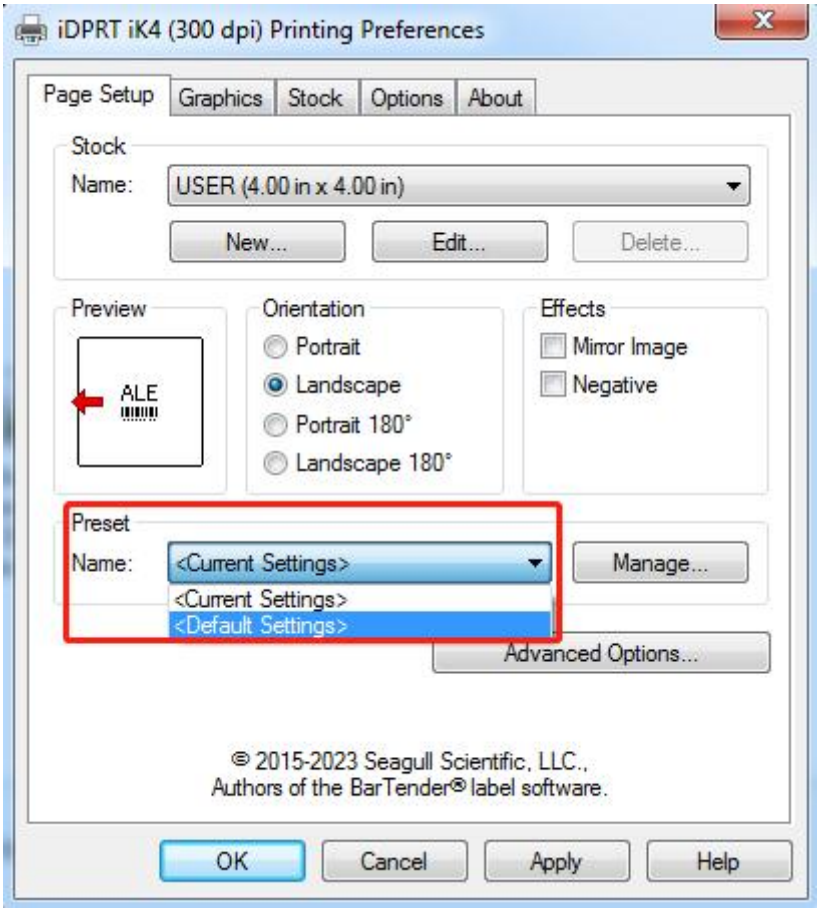

●Click “Manage”, and change the settings.

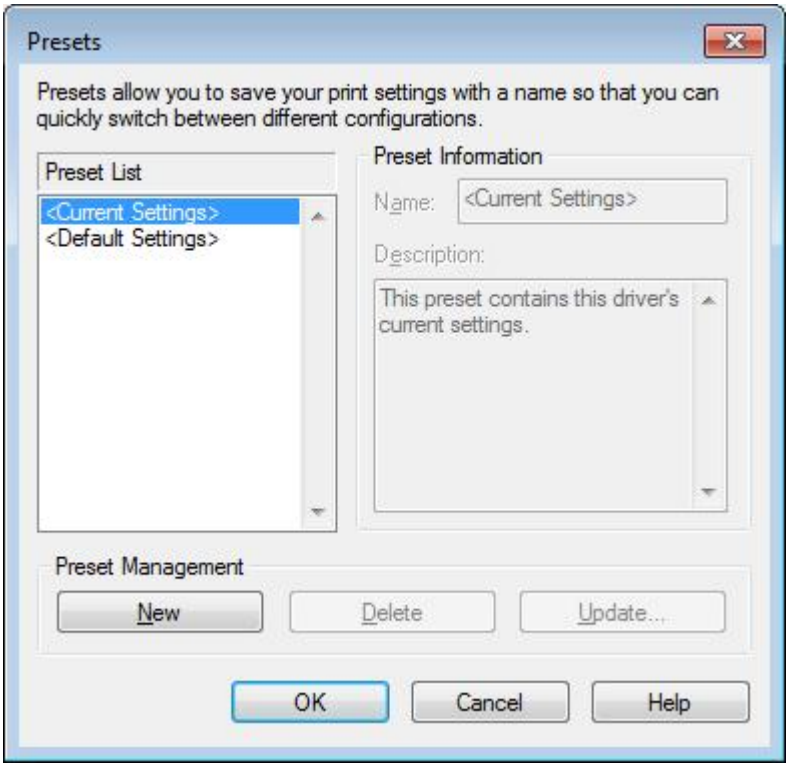

3.Click “Graphics”, and edit the pictures.

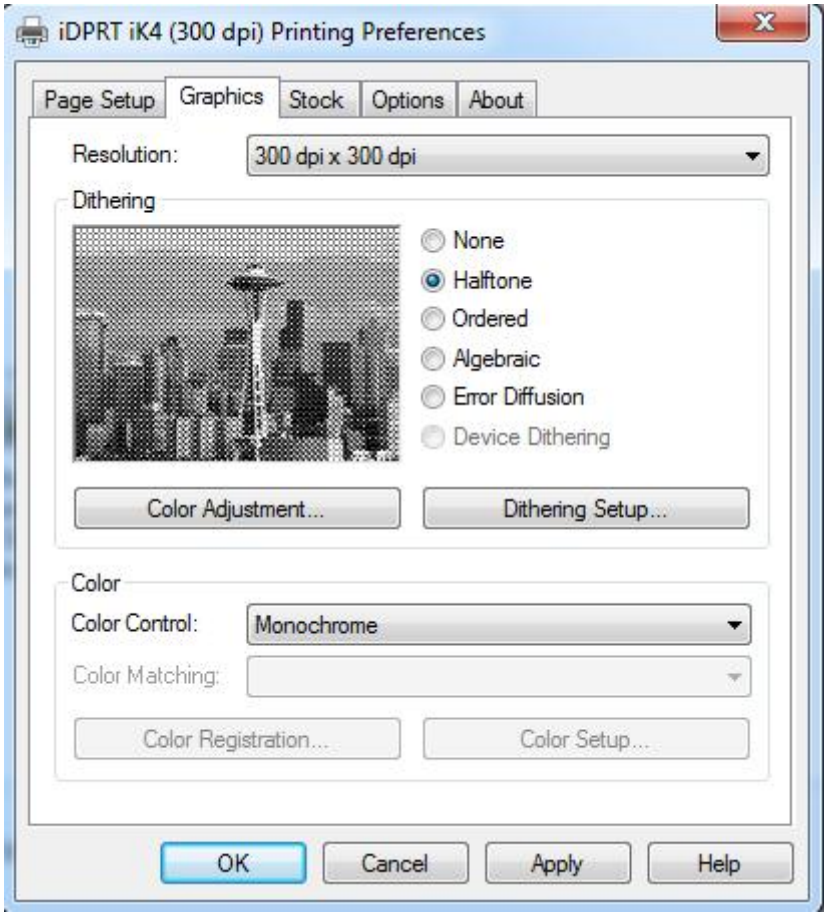

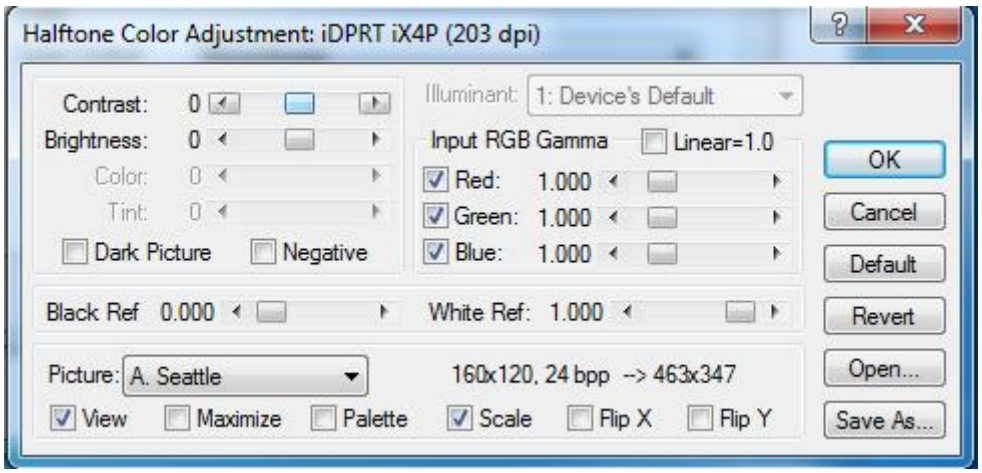

4.Click “Stock”, set the media settings, feed mode and feed options.

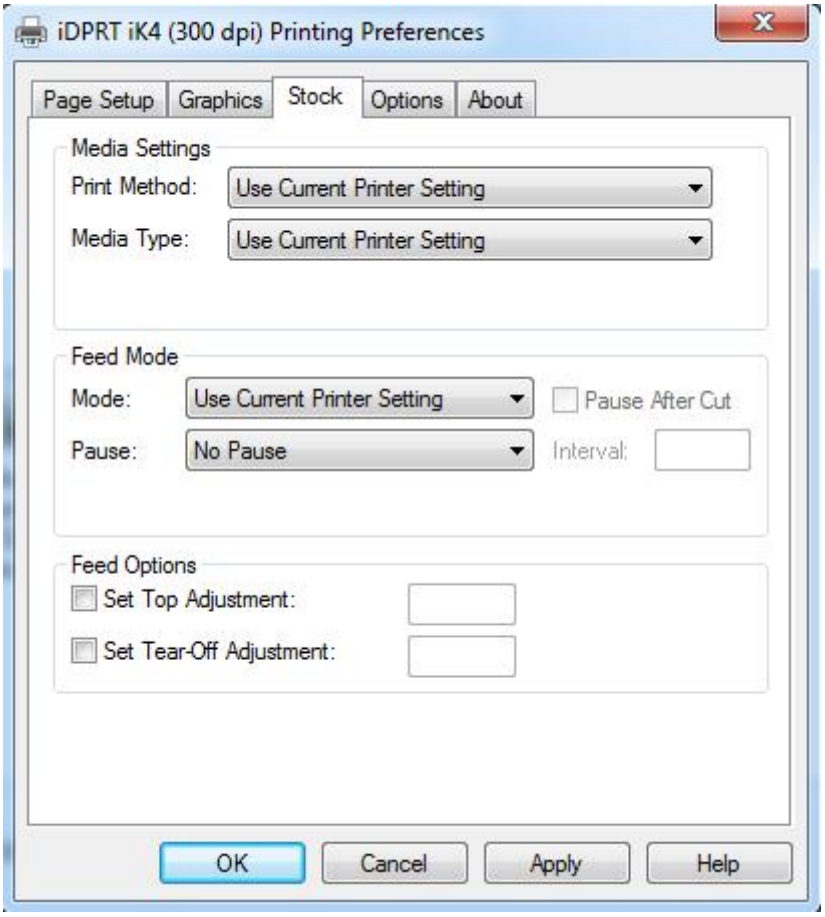

●Set up the print method (Direct Thermal / Thermal Transfer).

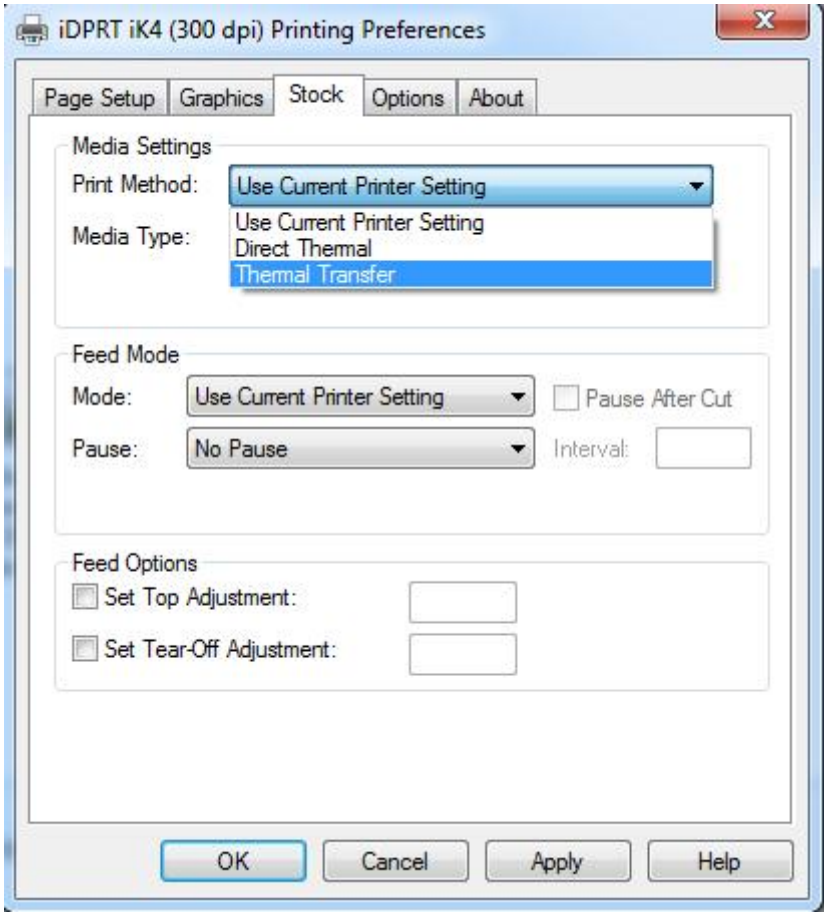

●Set up the media type.

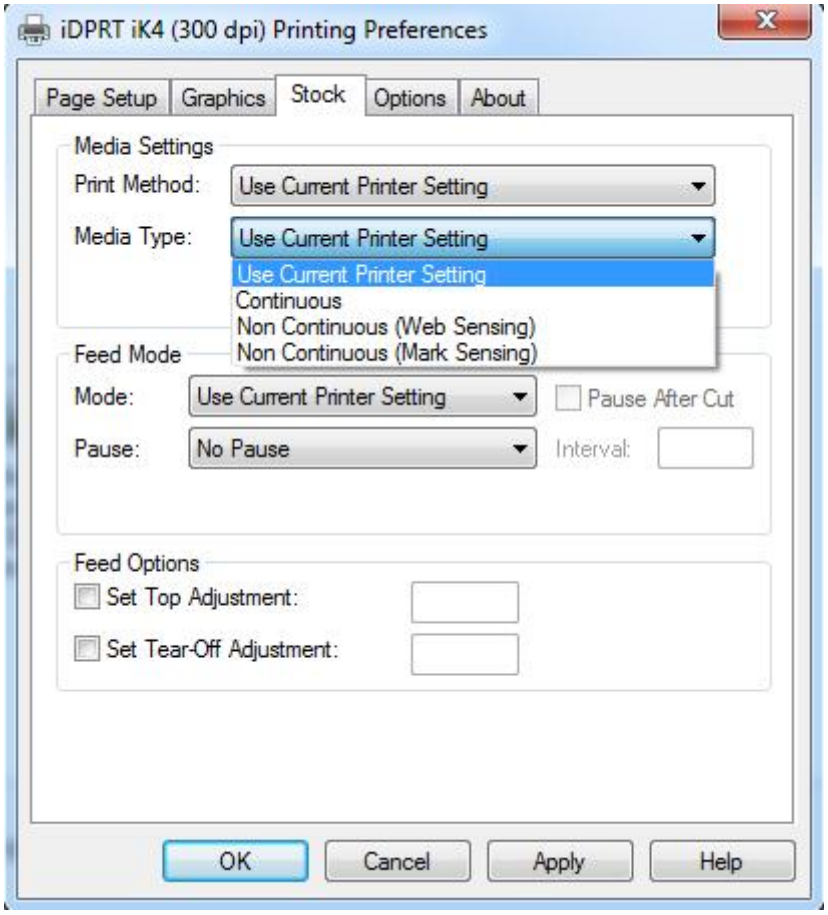

●Click “Feed Mode” → “Mode”, and choose the method of media handing.

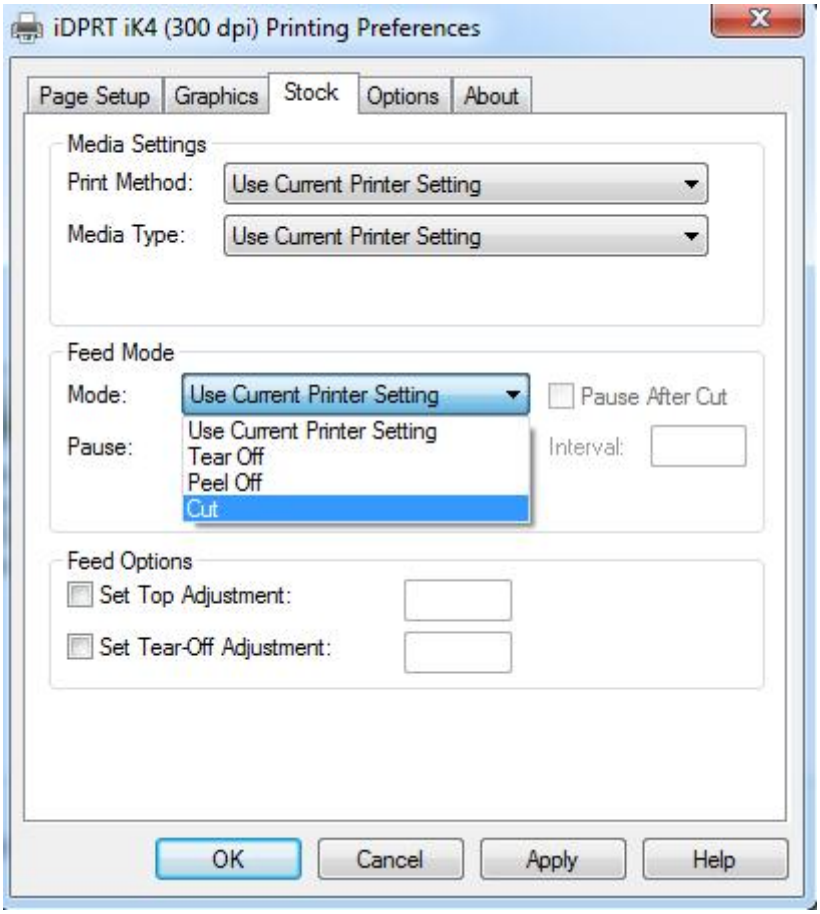

7.4.2 Printer Properties

1.Click “Start” → “Devices and Printers”. Right click the icon and choose “Printer properties”.

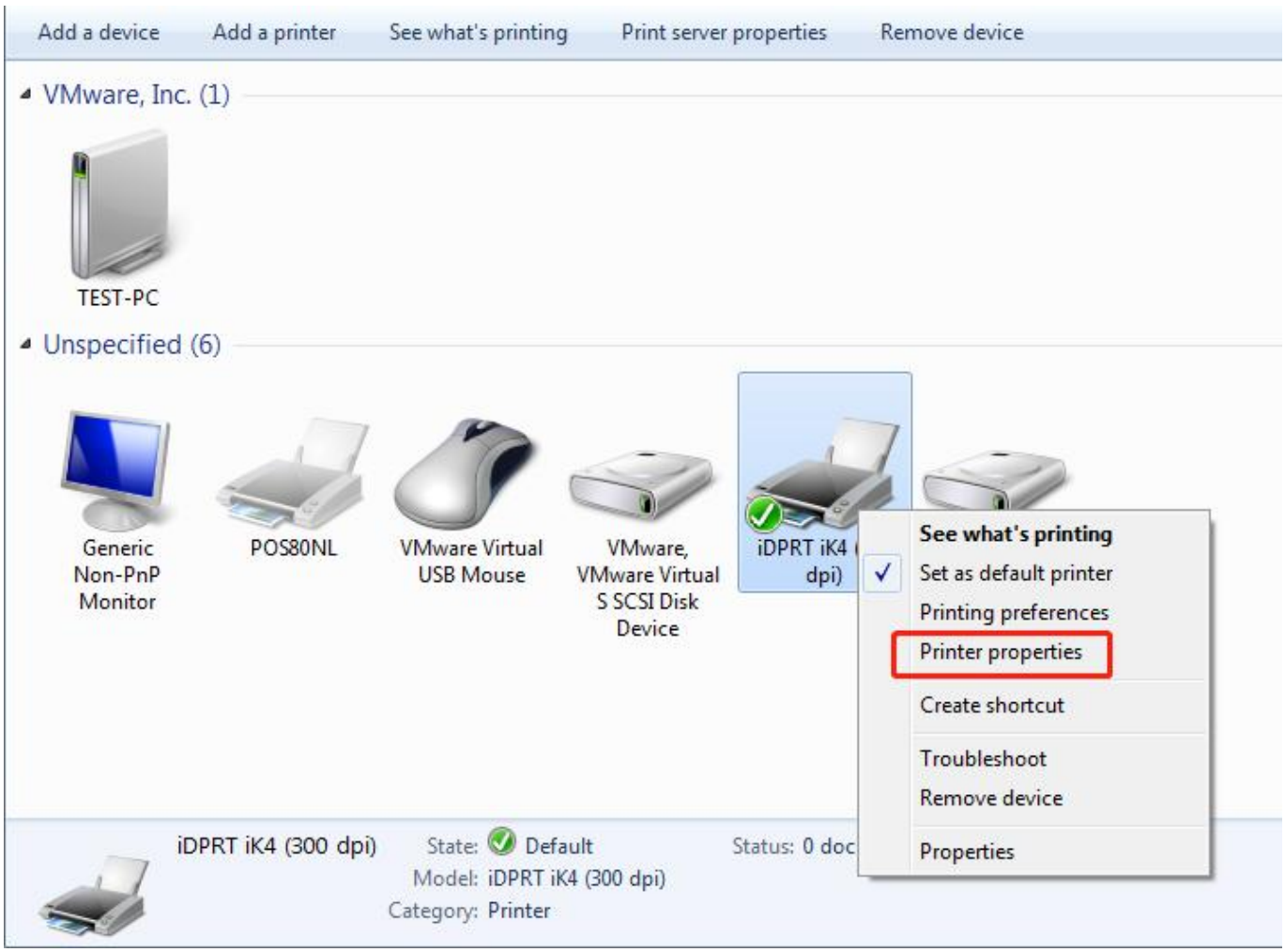

2.Click “General” → “Print Test Page”, and printer will print labels with current settings.

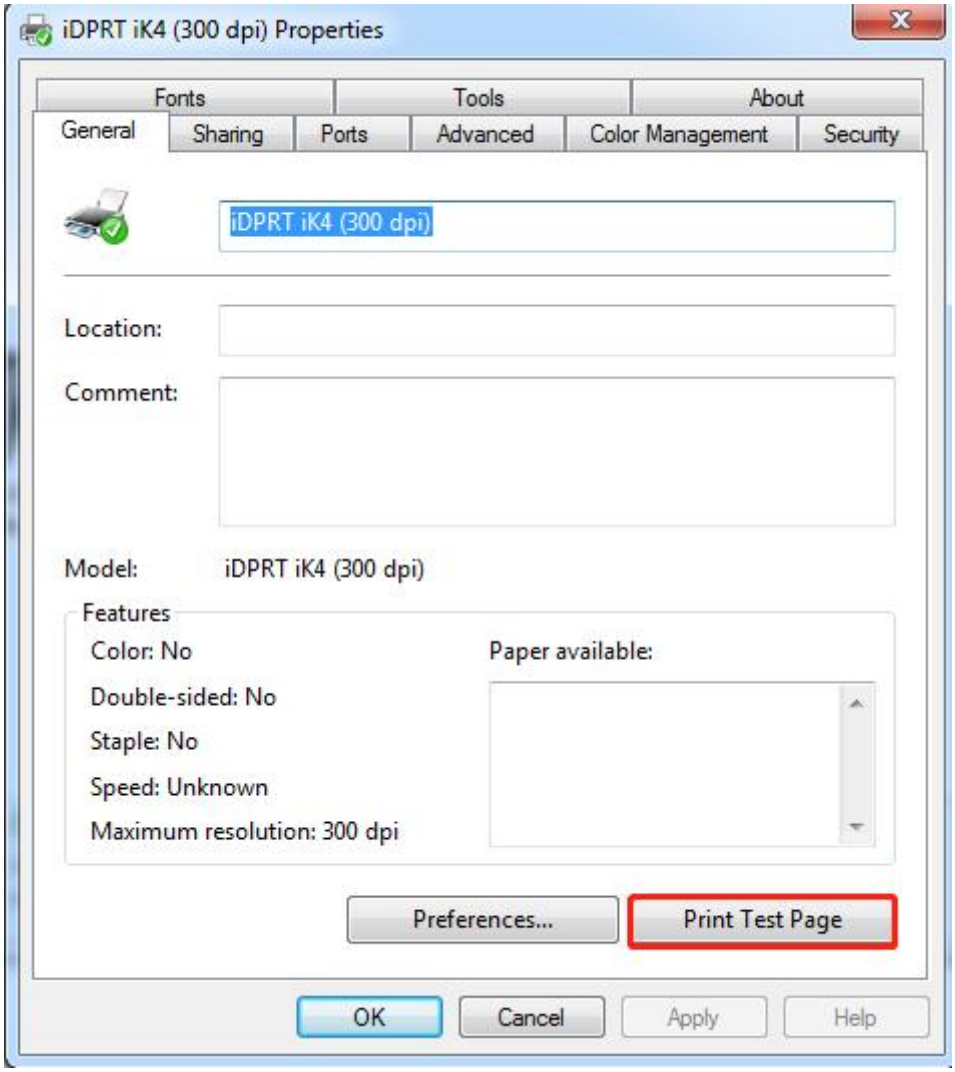

3.Click “Ports”, and choose the port needed.

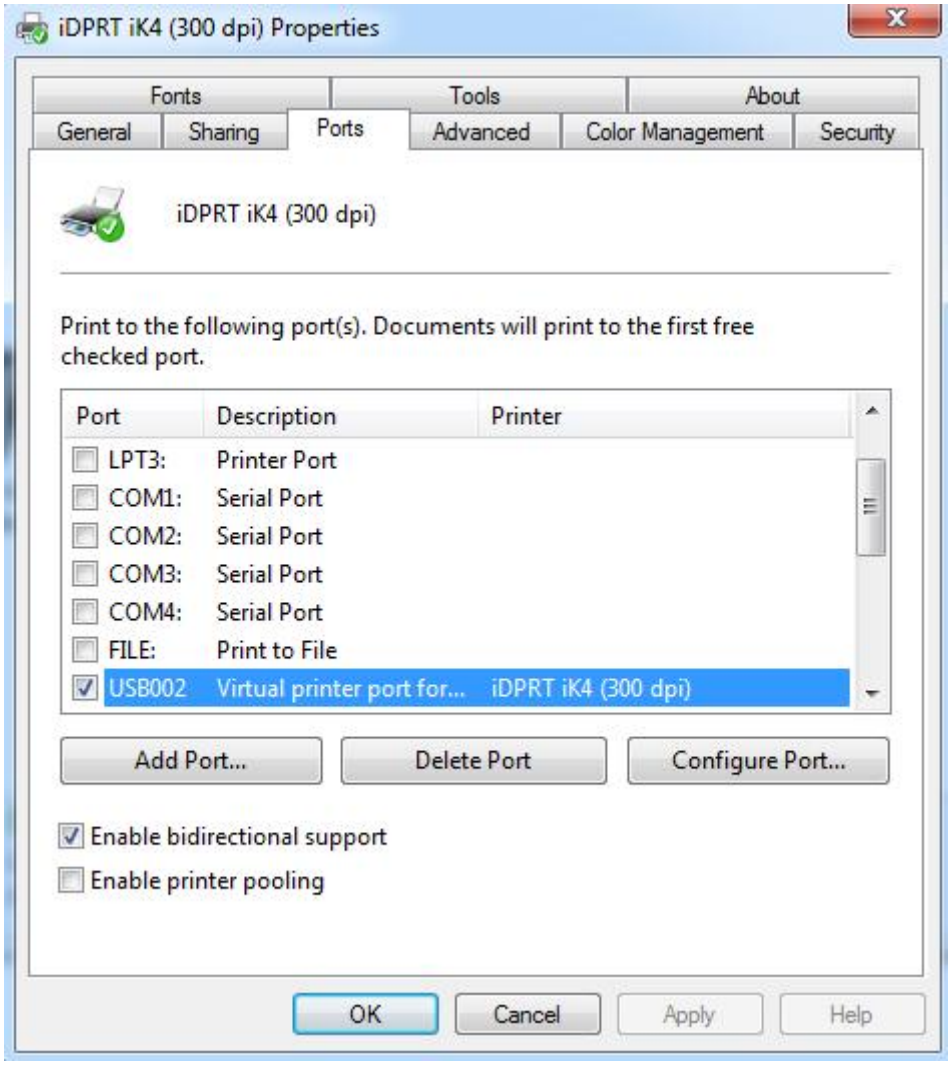

4. Click “Advanced” to set the available time for printer.

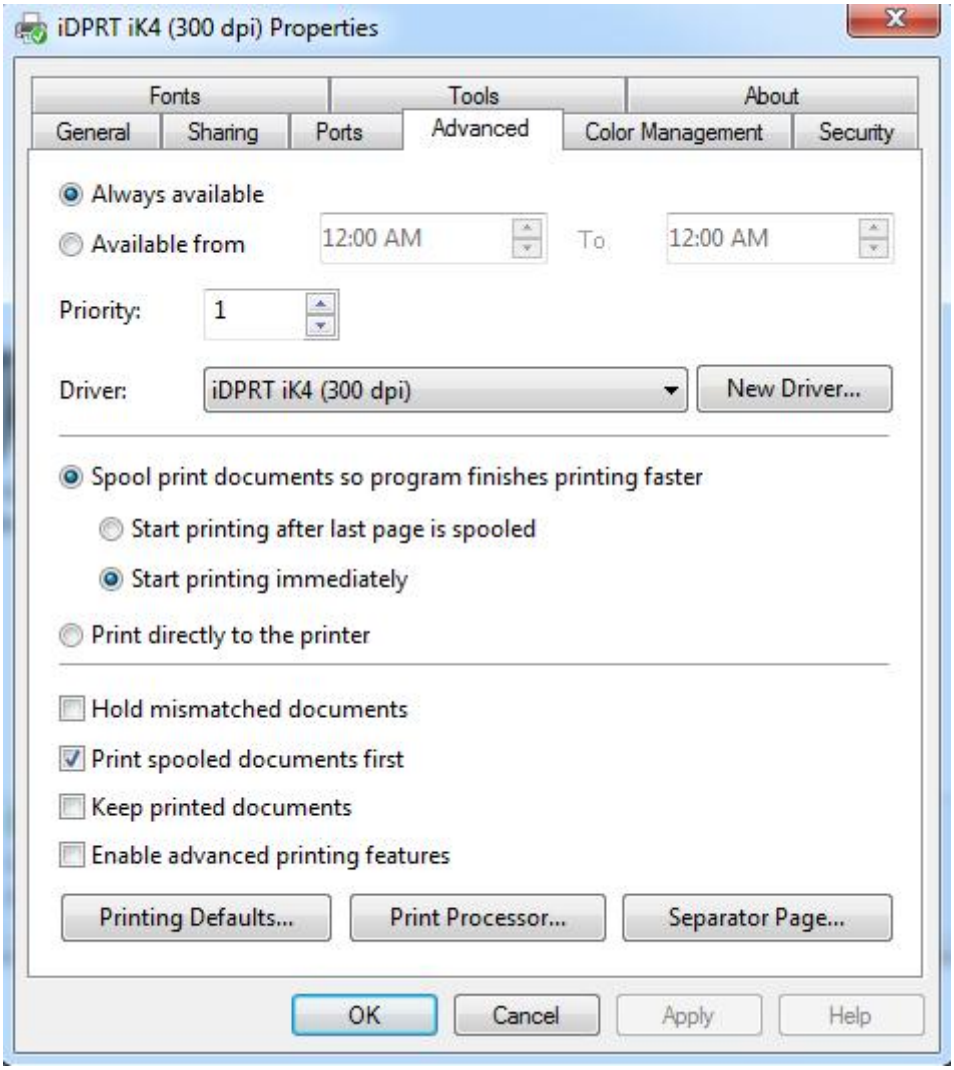

Chapter 8 BarTender UltraLite Instructions

8.1 Introduction

This chapter provides instructions on BarTender UltraLite program according to PC operating systems (OS).

The followings are supported.

- Windows 10, Windows 8.1, Windows 8, and Windows 7.
- Windows Server 2016, Server 2012 and 2012 R2, Server 2008 and 2008 R2.
- Includes all 32-bit and 64-bit（x64）editions.

8.2 Installation Preparation

Download BarTender UltraLite application program in CD.

8.3 Installation

Note:

- **Under different operating systems, the screen may be slightly different. Take Windows 7 as example.**
- **To avoid the prevention, recommend to close the security software before installation.**

1.Double click the application program .

2.Select language, then click "OK".

3.Click "Install".

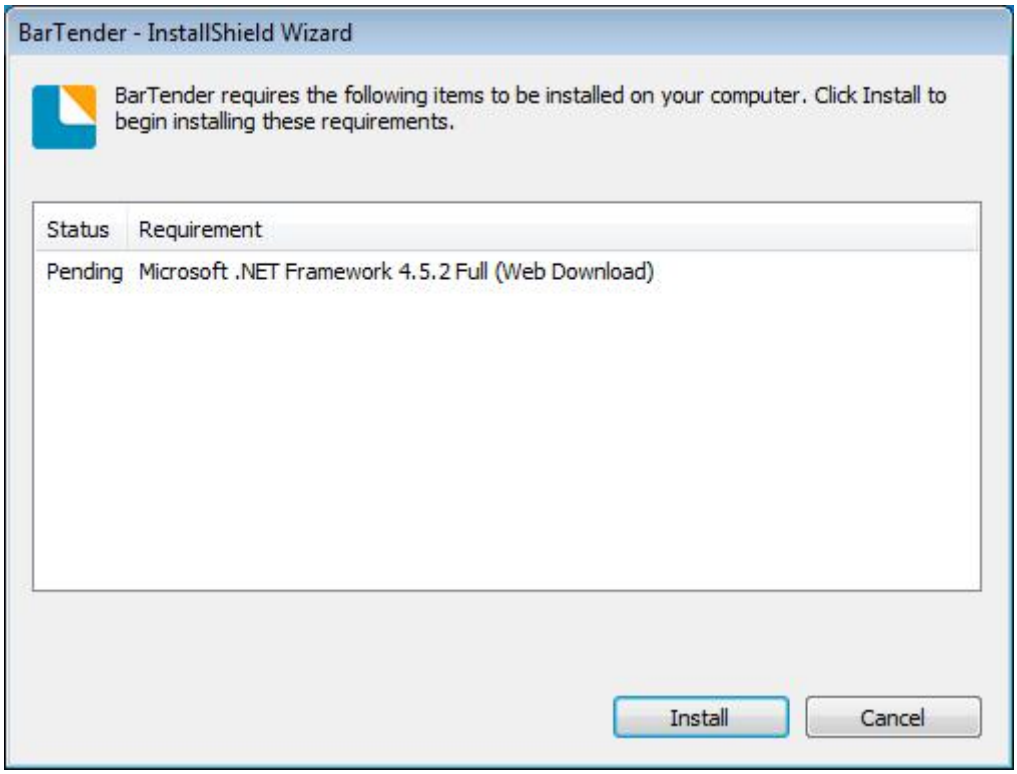

4.Click “Next”.

5.Read and accept the license agreement, then click "Next".

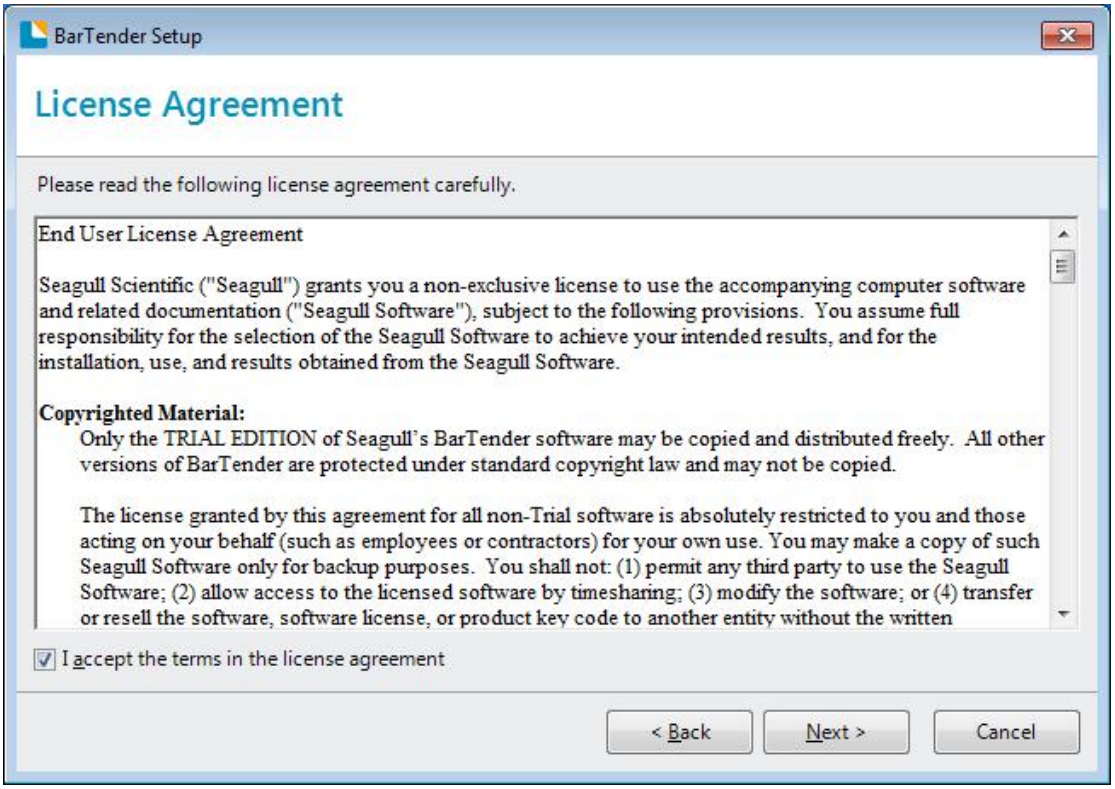

6.Select "Features" and installation location, then click "Next".

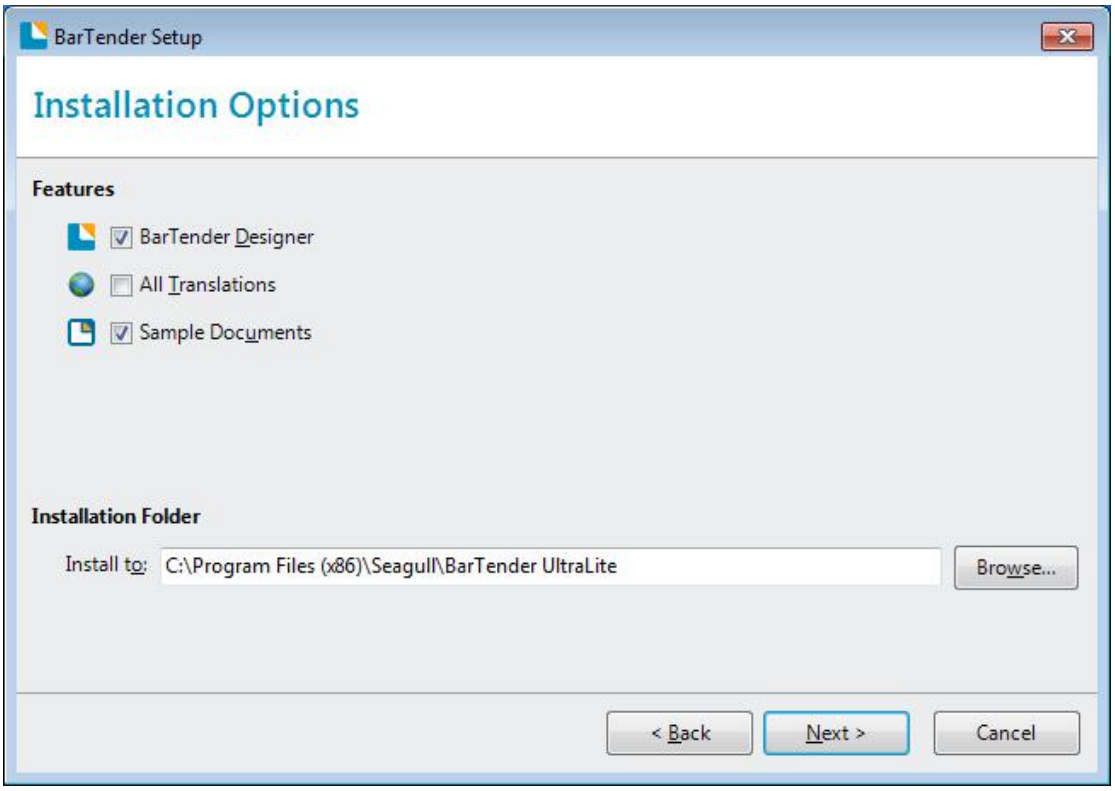

7.Click "Install".

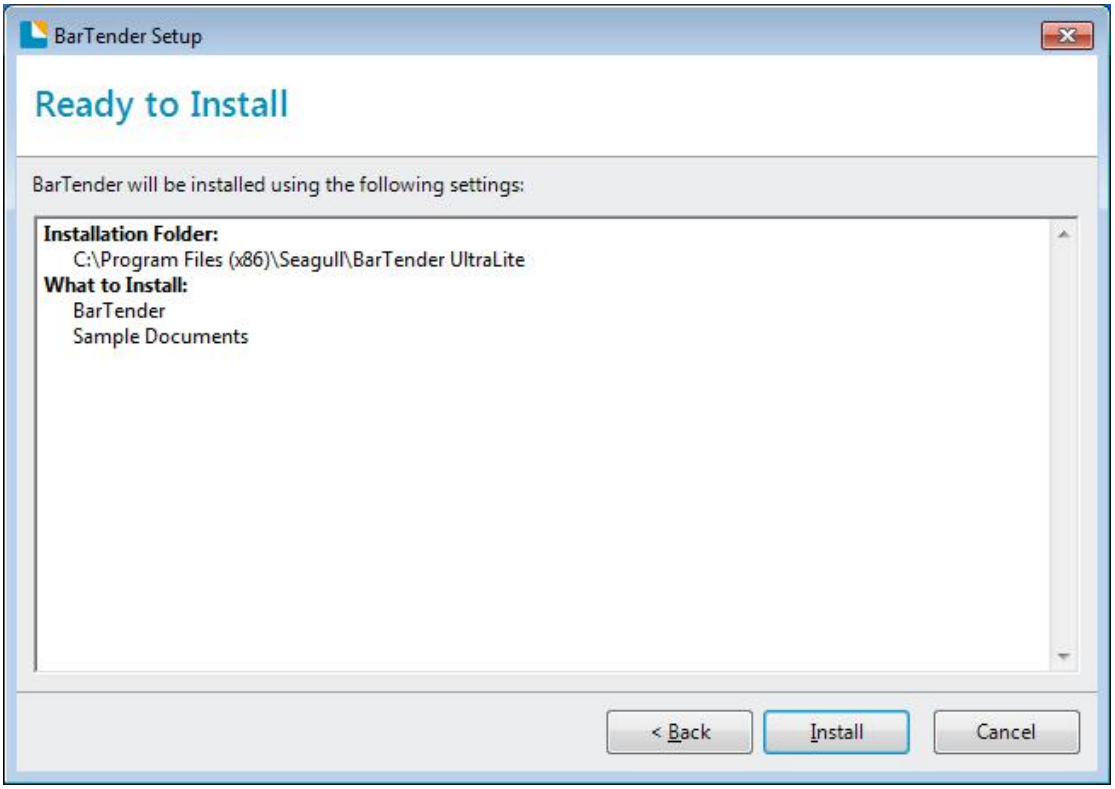

8.Click "Finish".

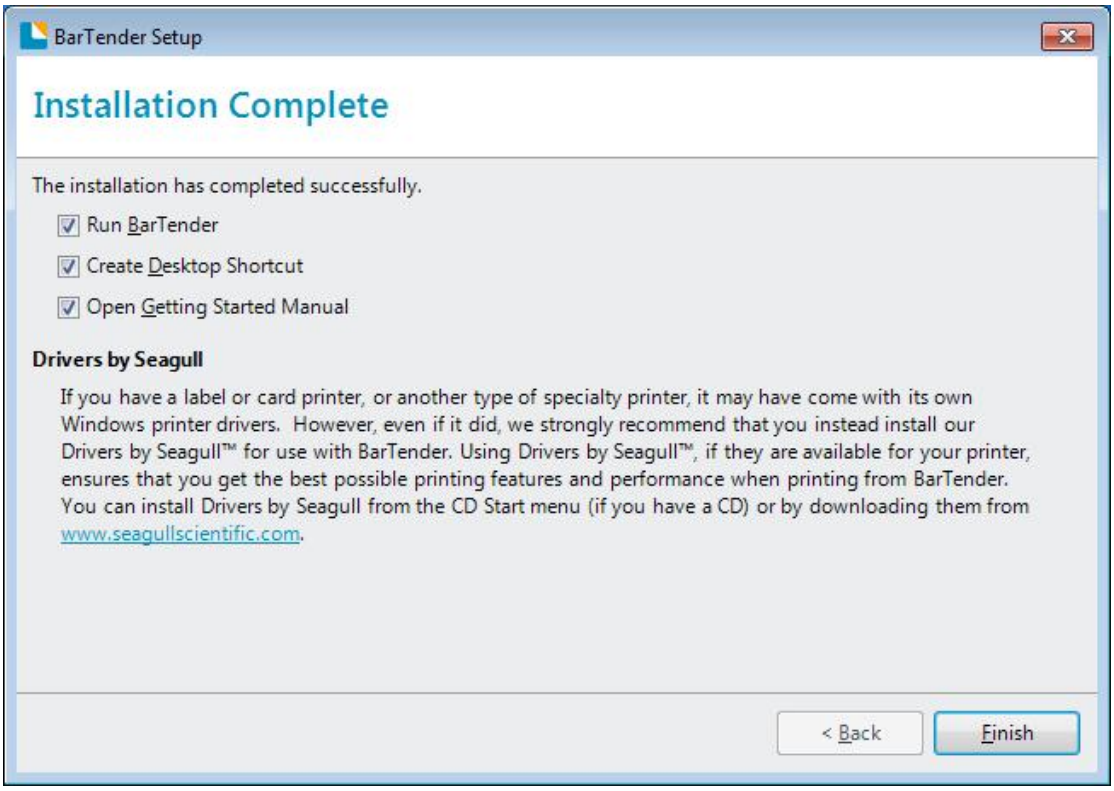

9.Back to desktop, and you will see the icon of BarTender UltraLite. Double click it and get down to use.

8.4 Usage

8.4.1 Page Settings

1.Double click the icon, then choose the edition. Click “OK”. (The edition may be changed according to different needs.)

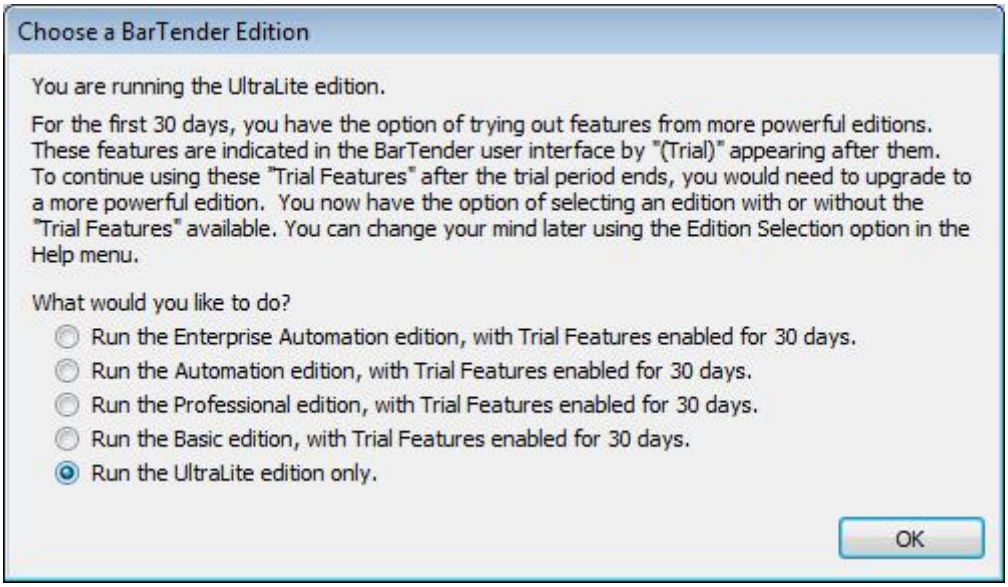

2.Click “Start a new BarTender document”.

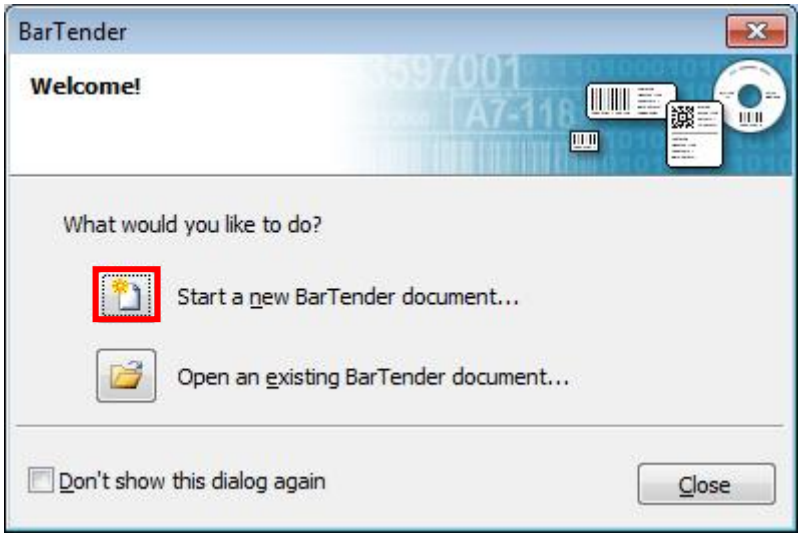

3.Choose “Blank Template”, then click “Next”.

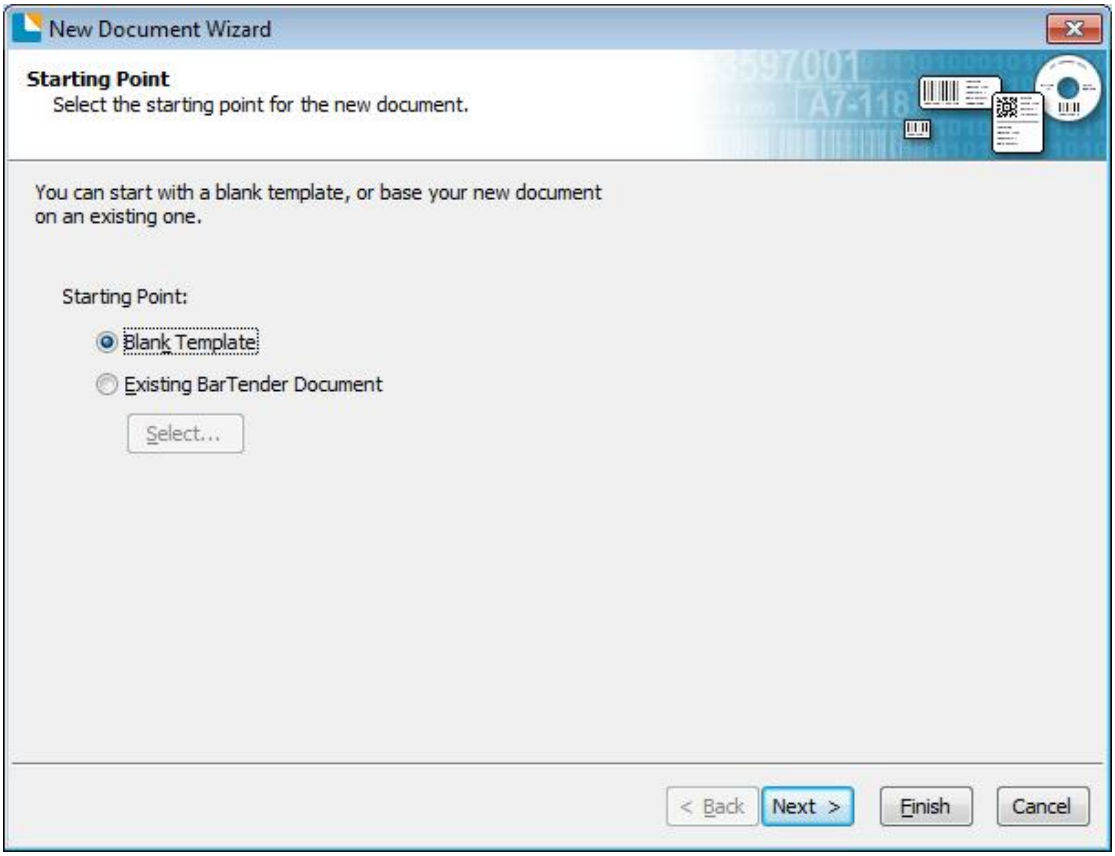

4.If the predefined stocks do not meet your need, tick “Specify Custom Settings”. Then click “Next”.

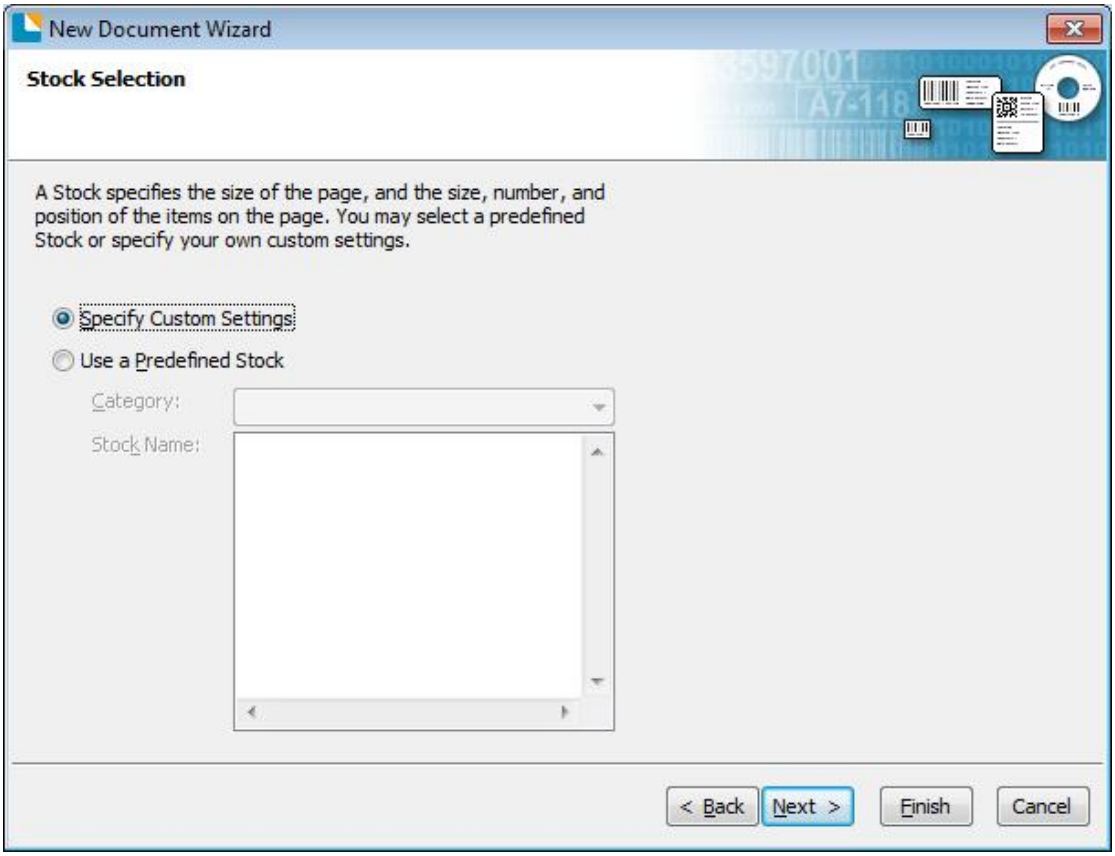

5.Tick “Single item per page”, then click “Next”. (If you print multiple labels, tick “Multiple columns and/or rows of items per page”.)

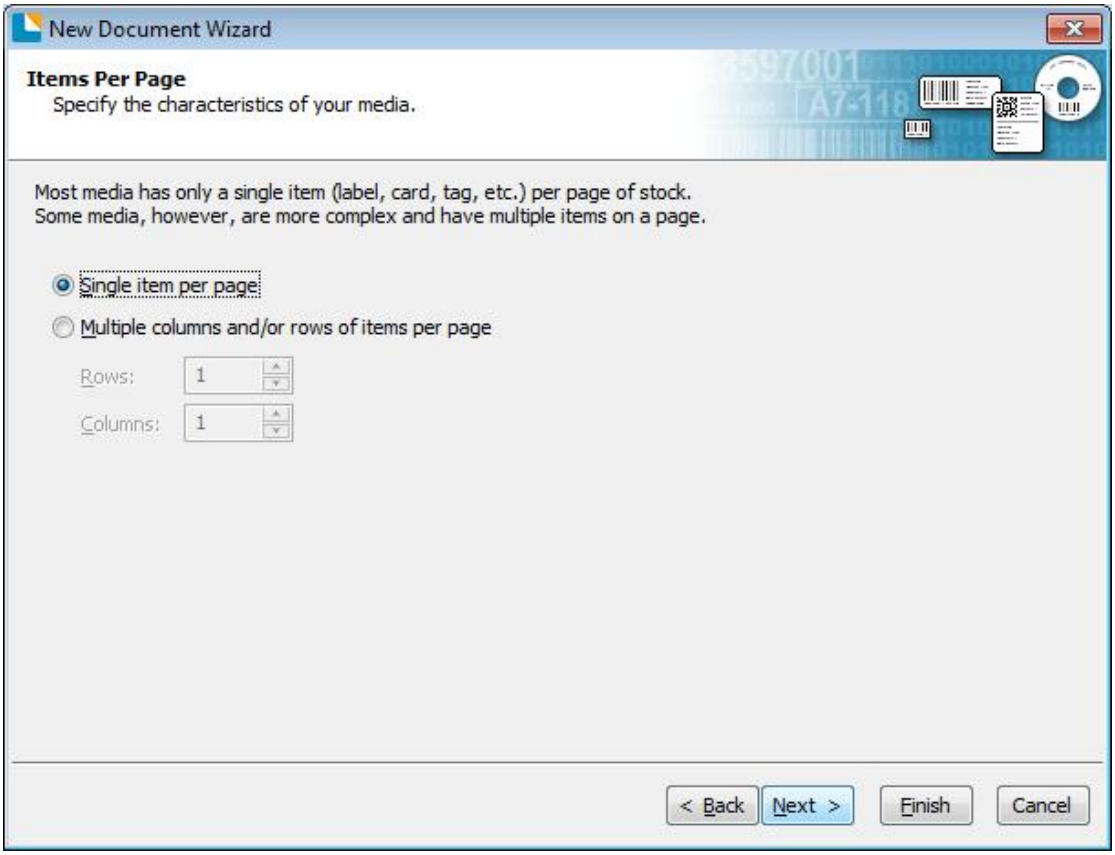

6.Edit the side edges, then click “Next”.

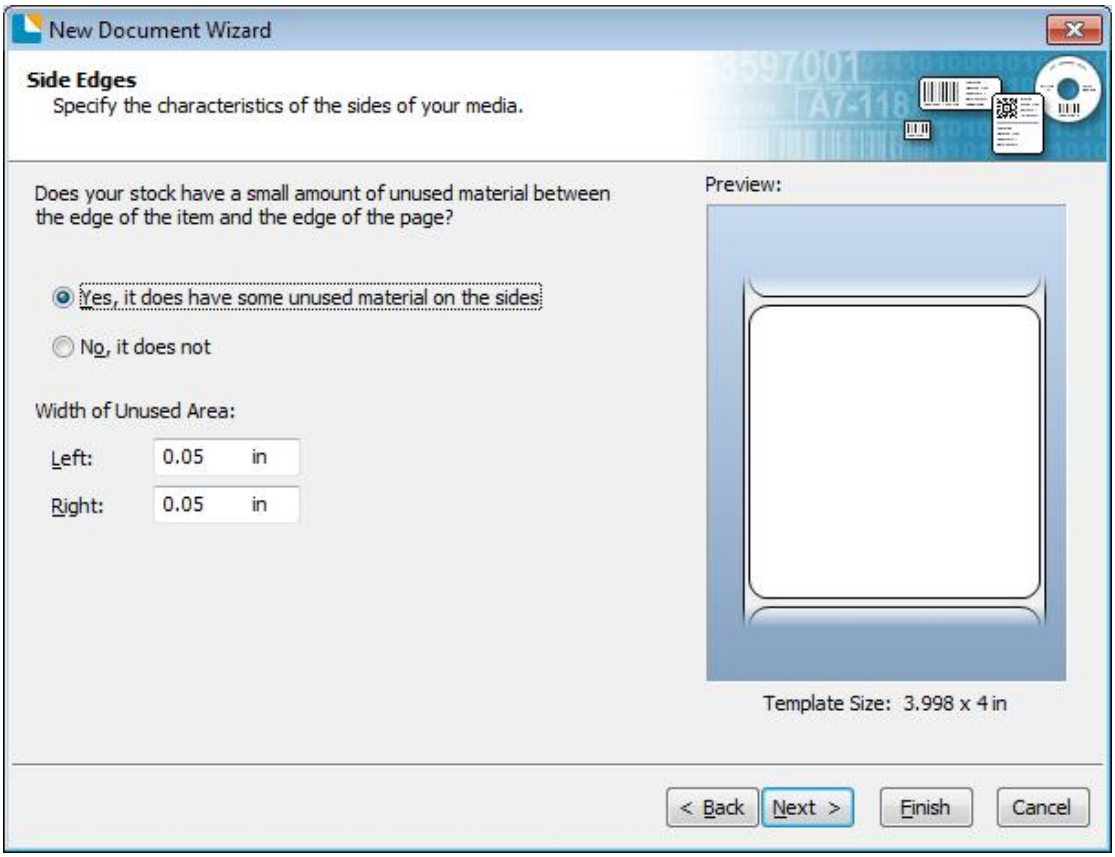

7.Choose the item shape, then click “Next”.

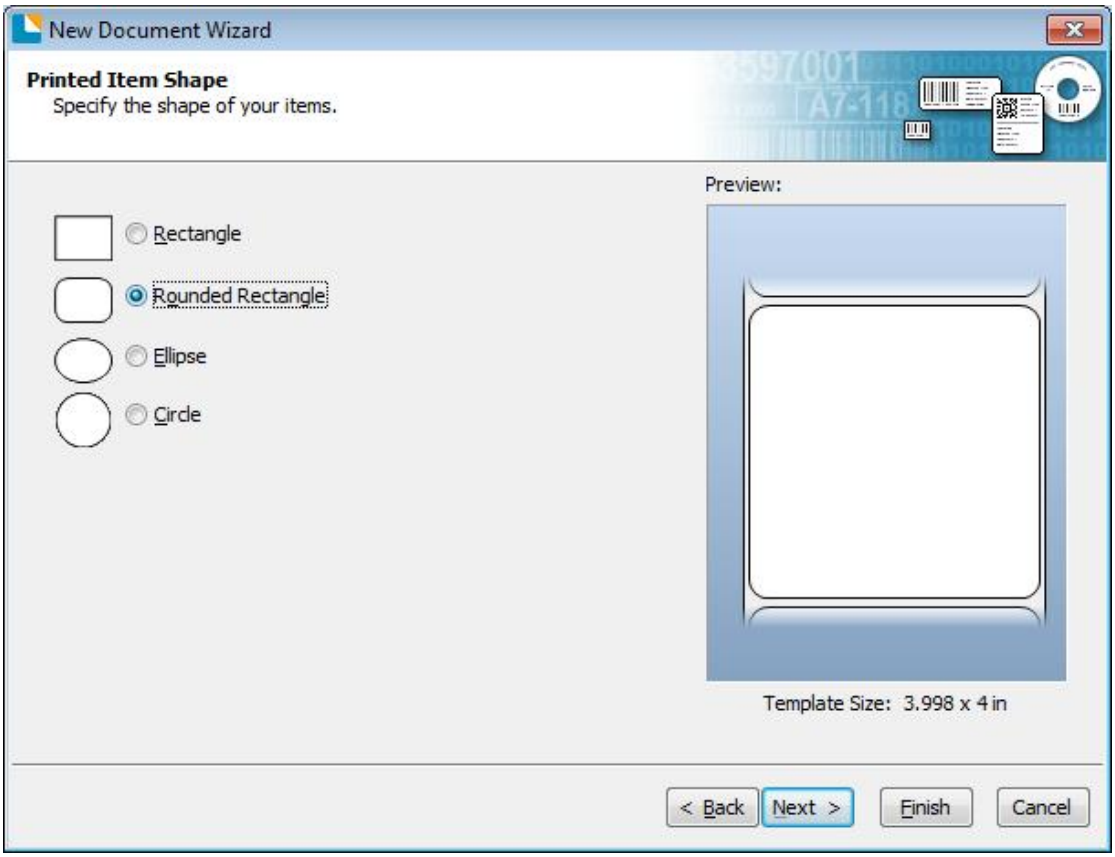

8.Edit the template size, then click “Next”.

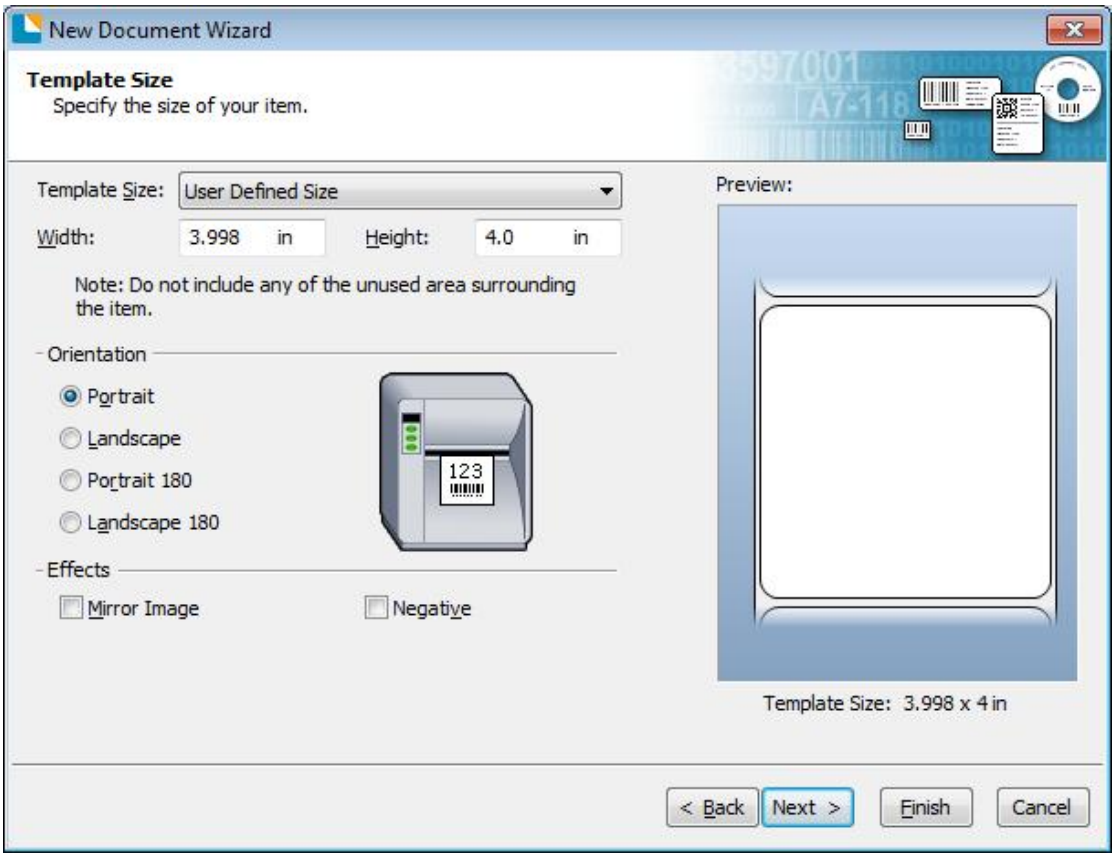

9.Based on your need, edit the template background. Then click “Next”.

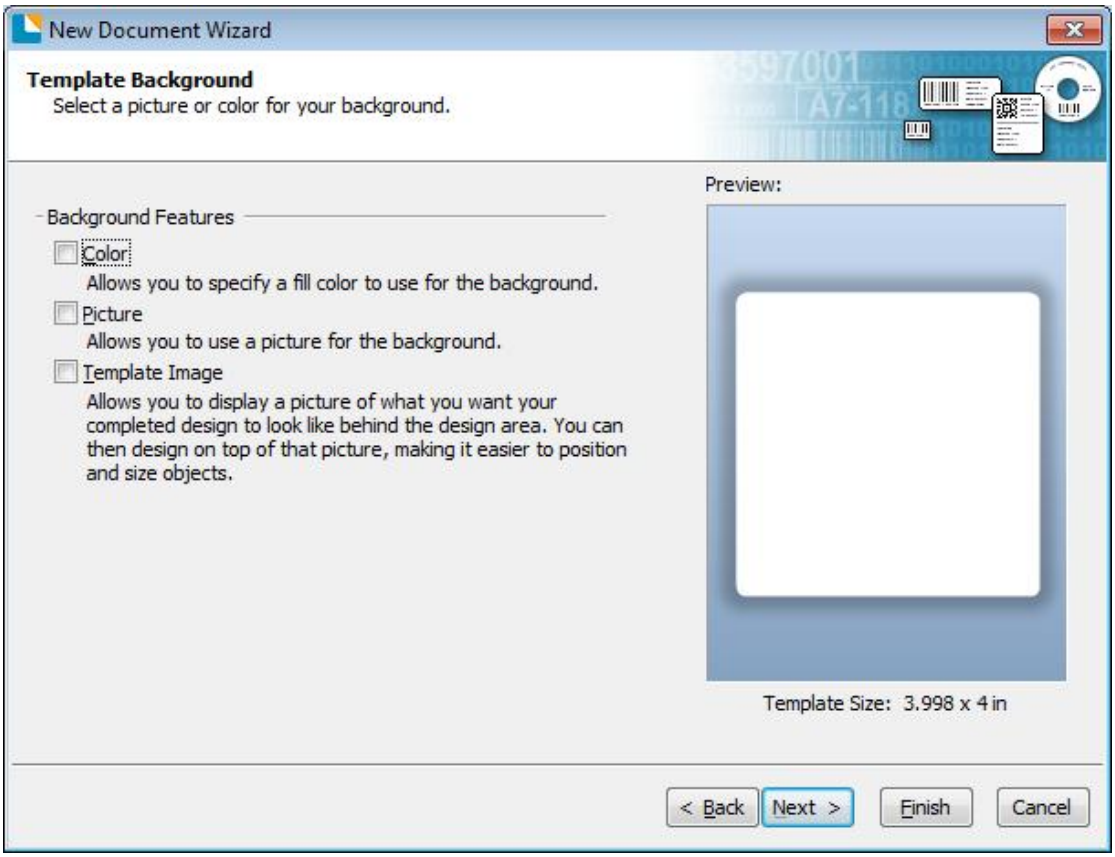

10.Finish the settings, showed in the “Review” and “Preview”. Then click “Finish”.

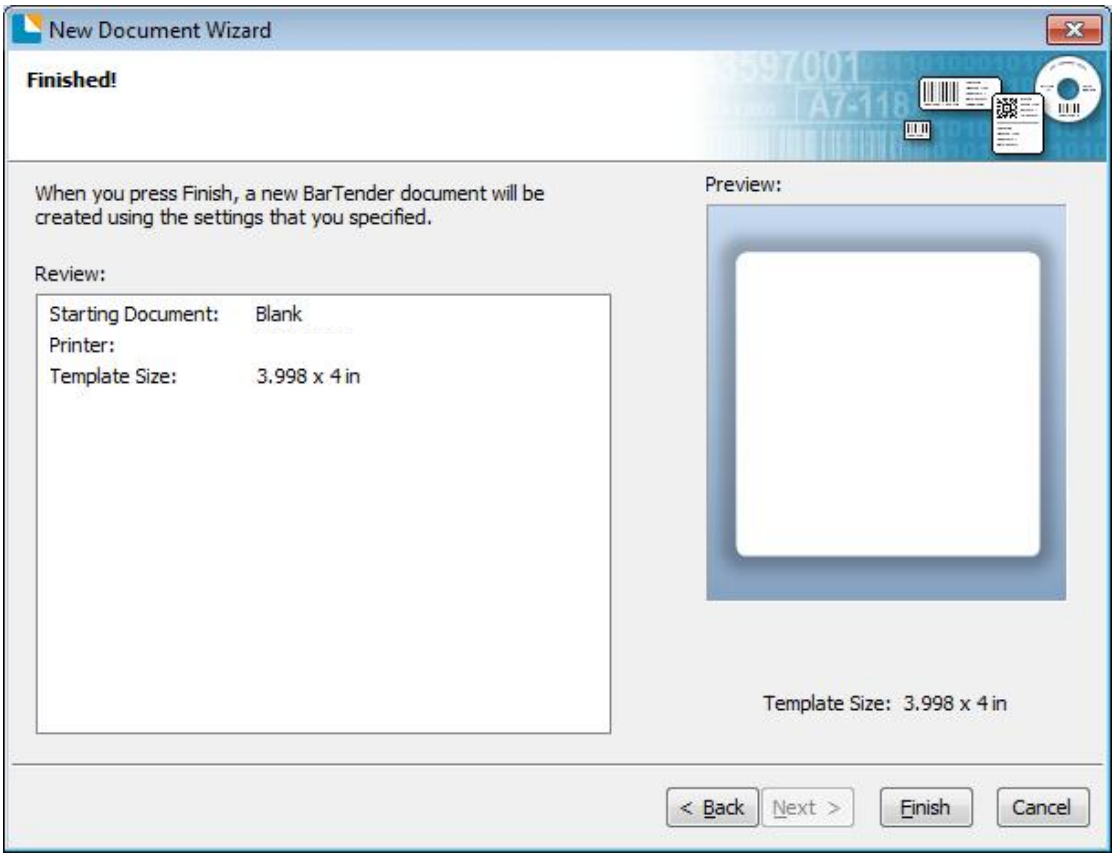

8.4.2 label Edit

1.Click the icon of code .

2.Choose the code, then click “Select”.

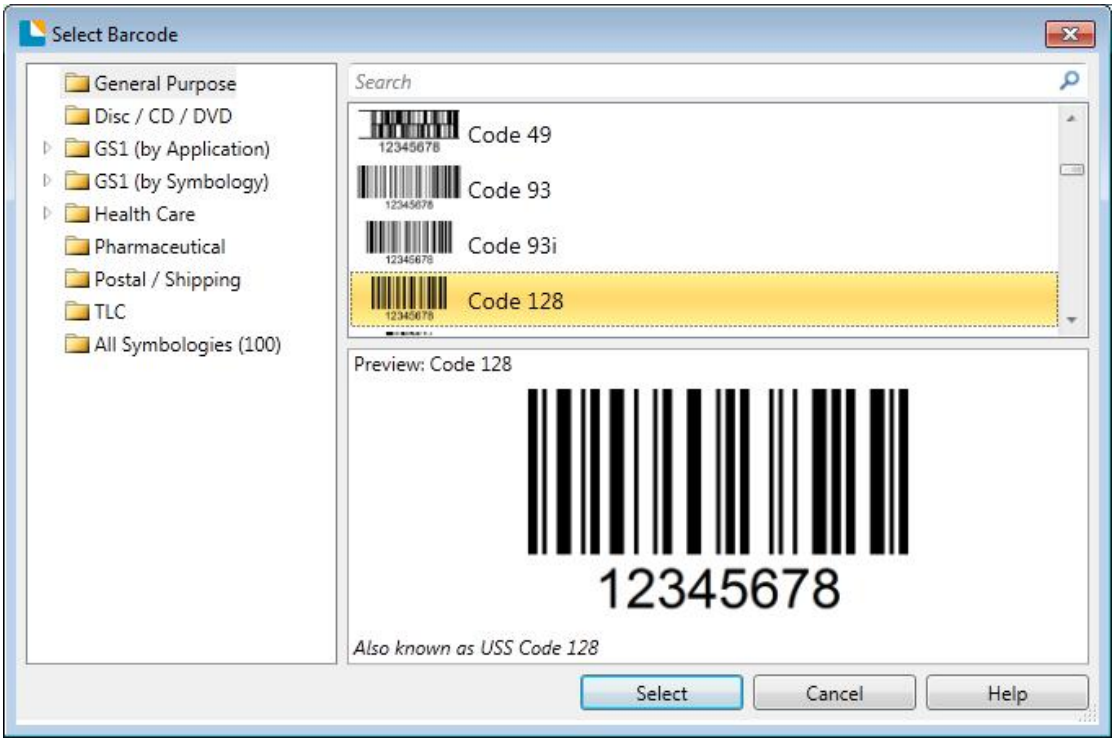

3.Click the blank, showing the code.

4.Double click the code and edit it. User can set up the size, font, border and so on.

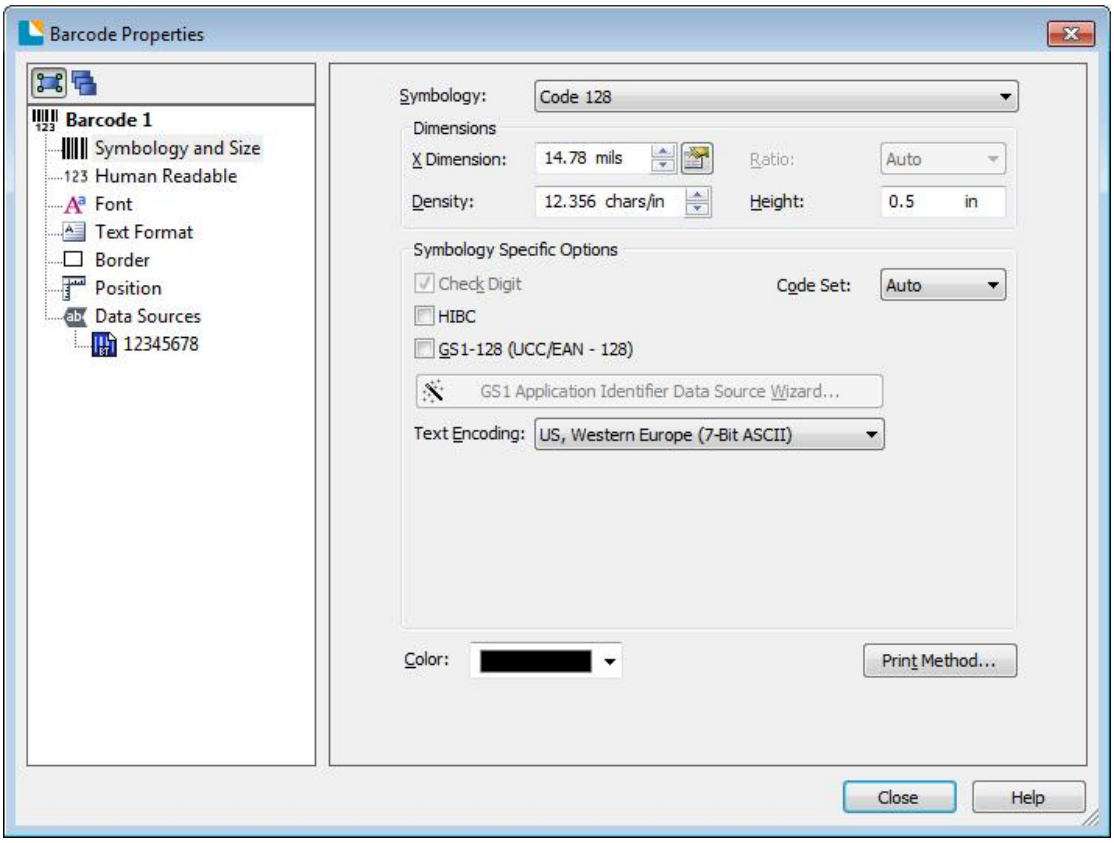

5.Click the icon of character , then enter the text.

6.Click the icon of picture , then edit the pictures.

7.Compose the text.

8.Finish all the settings. Click “Print” and a new label will be printed.

Appendix I Display Menu

Main menu	Submenu		Parameter	Remark
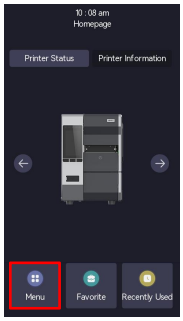 **Menu**	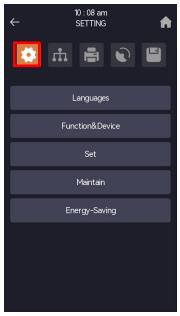 **SETTING**	Languages	• 简体中文 • English	Default: 简体中文
		Function&Device	Diagnostic mode	• Disable • Enable Default: Disable
		Set	Time Format	• 12 hours • 24 hours Default: 12 hours
		Set	Password Setting	NNNN Default: 0000
		Set	Display brightness	• 1 • 2 • 3 • 4 • 5 Default: 5
		Set	Buzzer volume	• 1 • 2 • 3 Default: 2
		Set	Touch prompt tone	• Disable • Enable Default: Disable

		Set	Restore Defaults	● Restore Printer: Restore all printer settings except for network settings to factory default values. ● Restore Network: Reinitialize the wired or wireless print server of the printer. ● Restore Saved: Load the last permanently saved settings. Default: Restore Printer
		Set	print: System Configuration	
		Maintain > Printed Mileage	Show printer print miles 0-99999.99 meters	No blank paper miles
		Maintain > Bad Dot Scan	Abnormal scanning test of impedance of print head	Tested, total return bad points
		Maintain > Bad Dot Printing Test	Print test sheet	
		Maintain > Media Sensor	Signal quantitative waveforms detected by print media	Detection according to specified sensor mode
		Maintain > Dump Mode	Print the received data and automatically change lines when the width of the label exceeds	Press feed key back to standby
		Maintain > Cutting Test	Test the cutter function	Errors will be reported
		Energy-Saving	● Disable ● Enable	Default: Disable

	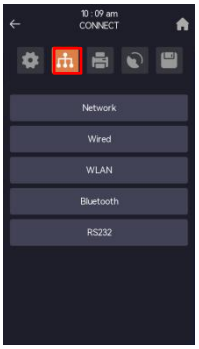 **CONNECT**	Network	Reset Ethernet	Are you sure to reset the network?
		Network	Main Ethernet	• Wired • WLAN Default: Wired
		Network	IP Port	NNNNN Default: 9100
		Network	IP Alternate Port	NNNNN Default: 9001
		Network	Print: Network Information	
		Wired	Wired IP Protocol	• DHCP • STATIC Default: DHCP
		Wired	Wired IP Address	NNN.NNN.NNN.NNN Default: 0.0.0.0 N：0-9; NNN：0-255
		Wired	Wired Subnet	NNN.NNN.NNN.NNN Default: 0.0.0.0N：0-9;
		Wired	Wired Gateway	NNN.NNN.NNN.NNN Default: 0.0.0.0N：0-9; NNN：0-255
		RS232	Baud Rate	• 9600 • 19200 • 38400 • 57600 • 115200
		RS232	Data Bits	• 7-bit • 8-bit Default: 8-bit

		RS232	Parity Check	• NONE • Odd • Even Default: NONE
		RS232	Flow Control	• NONE • XON/XOFF • Hardware • SW+HW Default: Hardware
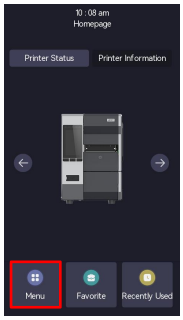 **Menu**	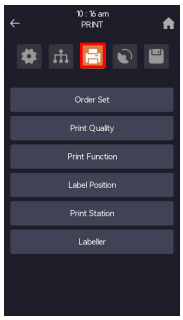 **PRINT**	Order Set	• ZPL • EPL • DPL • TSPL	Default: ZPL
		Print Quality	Print Darkness	0 ~ 30（ZPL） 0 ~ 15（TSPL/DPL/EPL）
			Print Speed	2 ~ 6 ips（600dpi） 3 ~ 12 ips（300dpi） 3 ~ 14 ips（200dpi）
			Print Type	• Thermal Transfer — Use carbon and thermal transfer media. • Thermal — Use thermal sensitive media without using carbon.
			Label Type	• Gap • Black Gap • Continious Default: Gap
			Label Width	203 dpi =0 ~ 104mm 300 dpi = 0 ~ 106mm 600 dpi =0 ~ 106mm

			Label Length	The value cannot be modified.
		Print Function	Operation After Power On	● No Operation ● Paper Feed ● Calibration Default: No Operation
			Operation After print head Close	● No Operation ● Paper Feed ● Calibration Default: No Operation
			Sensor Type	● Auto ● Transmission ● Reflection Default: Auto
			Manual Calibration	
		Label Position	Collection Method	● Tear-off ● Peel off ● Cutter ● Rewinding Default: Tear-off
			Cut line Offset	-120 ~ +120
			Printing Offset	X axis (horizontal)： -2496 ~ 2496 Y axis (vertical)： -120 ~ 120
		Print Station	Internal Flash	
			External U Disk	
		Labeller	Labeller Switch	● Disable ● Enable Default: Disable
		File Operate	Copy: Print file to U Disk	
			Copy: U Disk file to	

	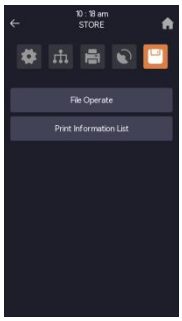 STORE		Printer	
			Delete: Print file	
			Delete: U Disk file	
		Print Information List	Print: Format	
			Print: Image	
			Print: Font	
			Print: Barcode	
			Print: All	

Appendix II Warning

Display Screen / Indicator Light	Possible Reasons	Display Screen Background Color
print head open Print head open. Please close print head.	The print head is not fully closed.	Red
	The print head opening sensor is not working properly.	
Media Out Media out. Please load new meida.	Media not loaded or improperly loaded.	Red
	The medium sensor is not aligned.	
	The printer has been set up for non continuous media, but continuous media is loaded.	
Paper Jam Media jam, please check media	There is a problem with the media in the media path.	Red
Carbon Out Carbon out, please load new carbon.	In thermal transfer mode: • No carbon installed • Incorrect loading of carbon • The carbon sensor did not detect the carbon • The medium obstructs the carbon sensor	Red
	In "thermal transfer" mode, even if the carbon is properly loaded, the printer may not detect the carbon.	
	If a thermal medium is used, the printer waits to load the carbon because it was mistakenly set for "thermal transfer" mode.	
Loaded Carbon Detected carbon under direct thermal mode, please take down carbon	Load the ribbon, but set the printer to thermal mode	Yellow
print head recognition failed Print head is not certified product, replace the print head	When replacing the print head, the original print head was not used.	

Display Screen / Indicator Light	Possible Reasons	Display Screen Background Color
rint head component failure Print head component failure, need to replace print head	The print head component is not working.	Red
Replace print head Replace print head	The print head is nearing its lifespan and should be replaced.	Red
Maintain print head Clean print head	The print head needs to be cleaned.	Yellow
Print head overtemperature Print head overtemperature, stop all printing tasks	The temperature of the print head is very high, which may cause serious burns. Allow the print head to cool sufficiently.	
	The print head temperature is too high.	Yellow
Print head thermistor trouble	The print head has a faulty thermistor.	
Print head undertemperature Print head Undertemperature, stop all printing tasks	The print head temperature is close to its minimum operating limit.	Yellow
	The print head data cable was not properly connected.	
	The print head has a faulty thermistor.	
Cutter Error Cutter error, please restart printer	The cutting edge of the knife is very sharp. Do not touch or play with the blade with your fingers.	
	The cutting blade is located in the medium path.	Red
Insufficient memory for storage Not saved, insufficient memory	There is not enough memory to perform the specified function.	Yellow

Appendix III Download Path for UTILITY and Driver

1. Enter the website in browser: http://www.idprt.com
2. Select the “DOWNLOAD” to get the Utility and Driver.