HPRT

T20

Product Introdution

Appearance and Components

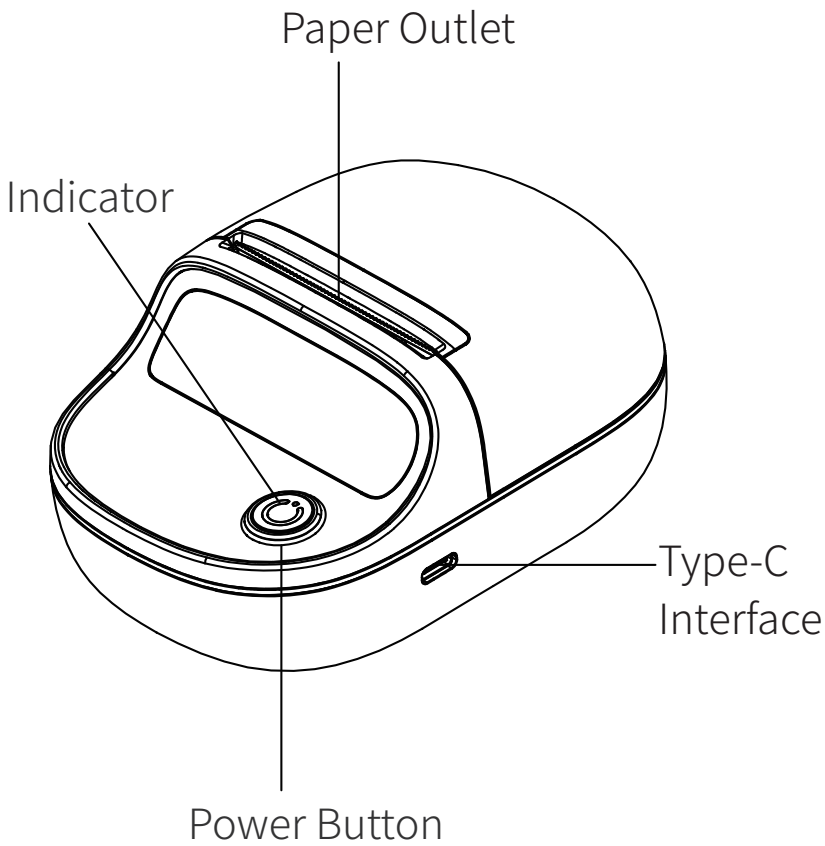

Packing List

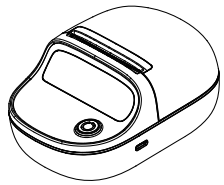

Printer

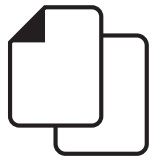

Quick Start Guide

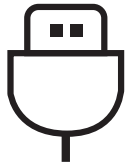

USB Cable(Optional)

indicates that the position is with high temperature during operation, please do not touch it.

indicates that the position is a sharp edge, please do not touch it.

LED Indicator Status

- Red LED — Error Status
  - ON: Error (Paper jam/Paper-out/Cover is opened)
  - Quick Flash: TPH is over temperature.
  - Slow Flash: Low power
- White LED — Basic Status
  - ON: Charging finished/Printer is ready.
  - Slow Flash: Charging

Touch Button Operation

1. Hold down the power button for 3 seconds: Turn on/off the printer.
2. Double click the power button: Position and calibrate the location of thermal label paper and heating line.

Paper Loading

1. Hold down the printer with one hand, pinch both sides of the upper cover with the other hand, and break it outward.

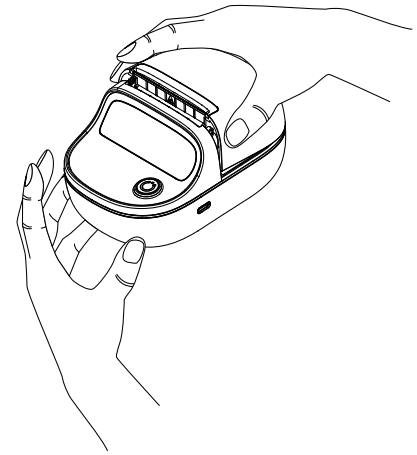

2. Load the paper roll in the direction shown, with the printing side facing down.

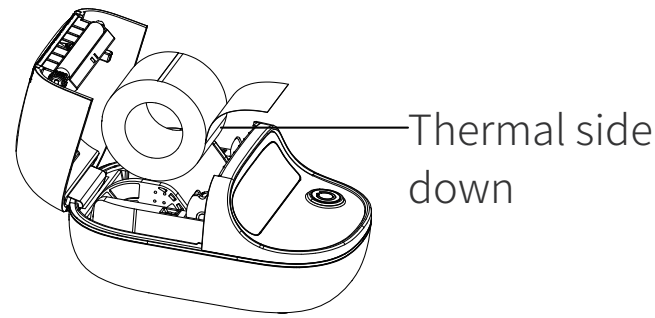

3. Push the paper bin baffles on both sides of the paper roll to clamp the paper roll.

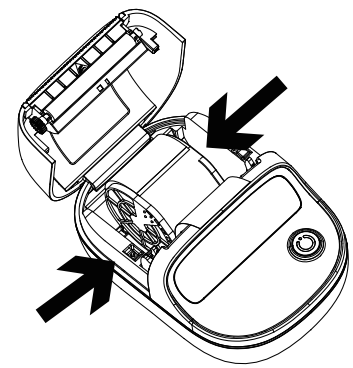

4. Pull out a small piece of paper to the outside of the paper outlet and close the upper cover.

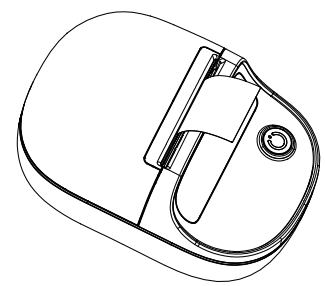

APP Download

1 .For home use, please scan the following QR code and download the HerePrint app.

2 .For commercial use, please scan the following QR code and download the HereLabel app.

Connection and Printing

01

After long pressing the power button to turn on the printer, first turn on Bluetooth, then open the app, click on "Connect Device" and select "HPRT T20".

02

Click on "New Label" and use the official consumables. The app will automatically recognize and guide you to the corresponding template for editing.Then edit and print.

Note: App operation shall be subject to the latest version.

Battery Charging

When the battery power is low, the red LED indicator will flash slowly. Please charge it by the exclusive USB cable in time. If you continue printing, it may power off automatically.

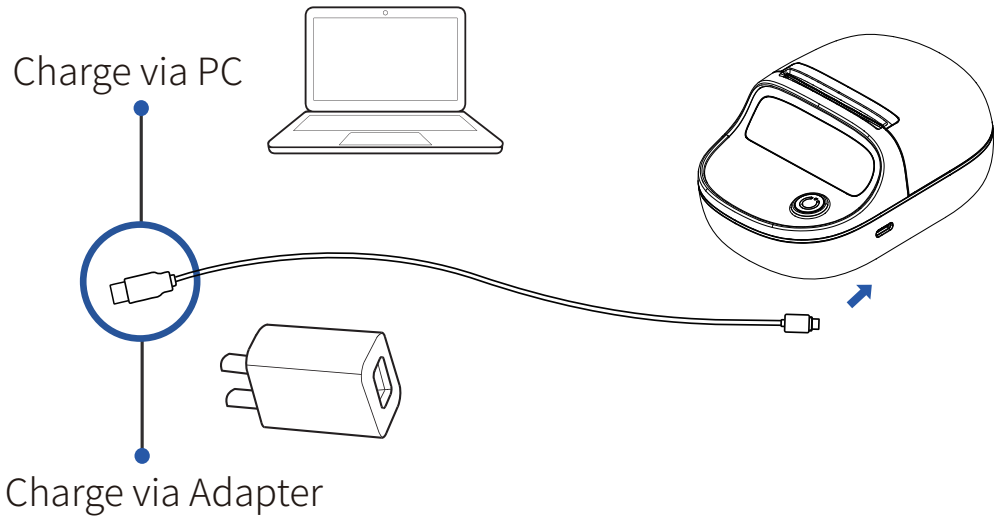

Note: The printer can be charged via computer USB port or adapter. Please note that the adapter is not supplied.

In a residential environment, running this equipment may cause Radio jamming.

FCC WARNING

This device complies with part 15 of the FCC Rules. Operation is subject to the following two conditions: (1) this device may not cause harmful interference, and (2) this device must accept any interference received, including interference that may cause undesired operation.

Any changes or modifications not expressly approved by the party responsible for compliance could void the user's authority to operate the equipment.

NOTE: This equipment has been tested and found to comply with the limits for a Class B digital device, pursuant to Part 15 of the FCC Rules. These limits are designed to provide reasonable protection against harmful interference in a residential installation. This equipment generates, uses and can radiate radio frequency energy and, if not installed and used in accordance with the instructions, may cause harmful interference to radio communications. However, there is no guarantee that interference will not occur in a particular installation.

If this equipment does cause harmful interference to radio or television reception, which can be determined by turning the equipment off and on, the user is encouraged to try to correct the interference by one or more of the following measures:

-- Reorient or relocate the receiving antenna.
-- Increase the separation between the equipment and receiver.
-- Connect the equipment into an outlet on a circuit different from that to which the receiver is connected.
-- Consult the dealer or an experienced radio/TV technician for help.

To maintain compliance with FCC’ s RF Exposure guidelines, This equipment should be installed and operated with minimum distance between20cm the radiator your body: Use only the supplied antenna.

FCC ID：2AUTE-T20