Product list

1. Receiver X1
2. Microphone X2
3. Audio cable X1
4. Power adapter X1
5. 1.5 V battery X4
6. User manual X1

Traceability Information for EU directive

Represented by TOA Electronic Europe GmbH
Suederstrasse 282, 20537 Hamburg, Germany

2.4GHz DIGITAL WIRELESS MICROPHONE SYSTEM

TRANTEC

MODEL:S2.4-BTX-G3

OPERATING MANUAL

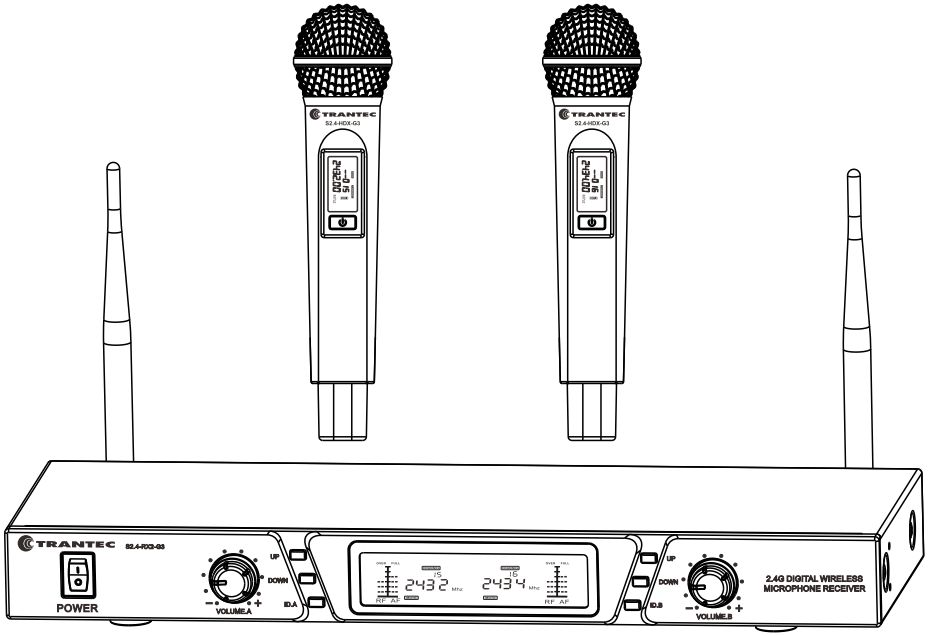

BEFORE USING THE MACHINE PLEASE READ THIS OWNER'S MANUAL CAREFULLY.

WARNING!

TO USERS

Declaration:

This equipment is a wireless electrical product. It generates, uses and radiates wireless frequency energy. If not installed and used in accordance with the instructions contained in this manual it may cause harmful interference to wireless communications products. Please use in accordance with local statute. We provide a number of products with different frequencies. Please choose the right one which complies with the local requirements. We take no responsibility for any problems caused by breaking local statutes.

There is no guarantee that interference will not occur in a particular installation. If it happens, the user is encouraged to try and correct the interference by one or more following measures:

RELOCATE THE RECEIVING ANTENNA
CHANGE THE WORKING FREQUENCY
CHECK SURROUNDINGS TO SEE IF ANY SAME OR SIMILAR FREQUECY ARE WORKING
CONSULT THE DEALER OR EXPERIENCED AUDIO TECHNICIAN

Copyright:

This manual is copyrighted with all rights reserved. No portion of this manual may be copied or reproduced by all means. Besides, all specifications and information is only for reference, we will not inform if updated.

Noted:

Avoid putting the receiver in a location that could affect the signal reception.
Please don't throw, drop , flap or toss while it is working,
The machine is not waterproof, avoid getting it wet.
Please insert the battery with the right polarity, and take out of transmitter when not using for a long period of time in case of leaking.
Pull out the AC adapter after using the receiver.
When replacing the battery, turn off the transmitter first.
There are no user serviceable components inside. Opening the receiver will void the warranty.
Use a soft cloth to clean the machine. Do not use gasoline or thinner.

CONTENT

CONTENT.....1
BRIEF INTRODUCTION.....1
MAIN FEATURES.....1
CONTROL AND FUNCTION LIST (RECEIVER).....2
OPERATION OF RECEIVER.....3
LCD DISPLAY.....4
HAND MIC OPERATION.....5
BODY-PACK TRANSMITTER 6
TECHNICAL SPECIFICATION.....7
CAUTIONS..... 8

1.BRIEF INTRODUCTION

This digital wireless microphone system has adopted ISM 2.4G digital Audio Frequency, automatically filters out radio interference. It presets 16 selectable channels. The comprehensive application of digital audio processing technology makes sound natural and clear. And the smart ID code identifying synchronization technology makes installation easy.

2.MAIN FEATURES

- 2.4GHz ISM band frequency
- GFSK modulation
- Using distance: 30M in no obstacle space
- Audio Format: 16bit, 38.4KHz
- No RF noise
- Lower battery consumption: battery can be used more than 5 hours
- Available CH: 16 channels.

3.CONTROL AND FUNCTION LIST (RECEIVER)

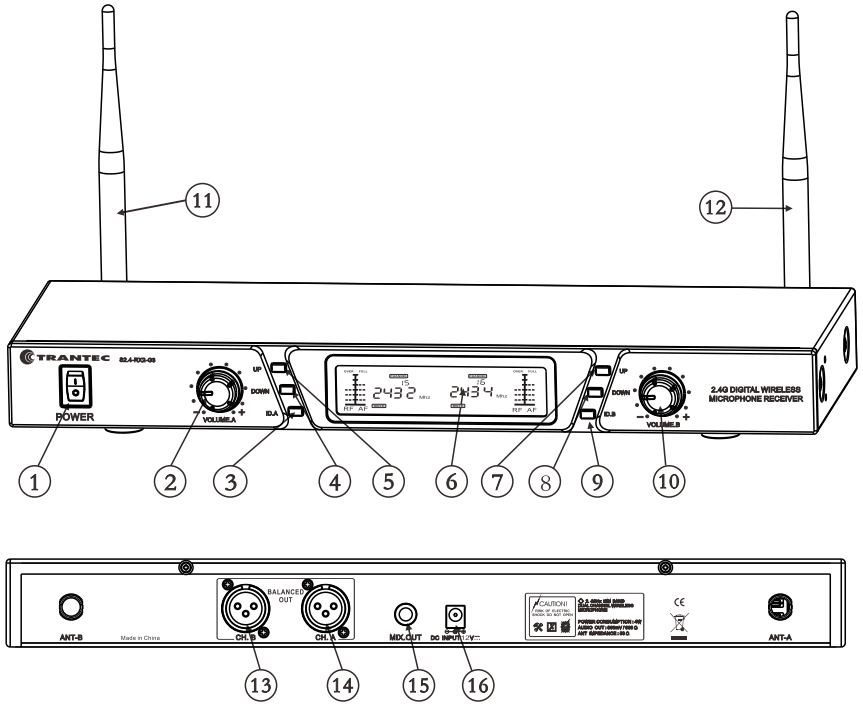

1. POWER
2. CH. A VOLUME CONTROL
3. ID A
4. ID A DOWN BUTTON
5. ID A UP BUTTON
6. LCD DISPLAY
7. ID B UP BUTTON
8. ID B DOWN BUTTON
9. ID B
10. CH. B VOLUME CONTROL
11. ANT. A
12. ANT. B
13. CH. B BALANCED OUT
14. CH. A BALANCED OUT
15. MIX OUTPUT
16. DC INPUT

8. TECHNICAL SPECIFICATION

COMPREHENSIVE PERFORMANCE

CARRIER FREQUENCY:	2.404-2.474GHz
AVAILABLE CH:	16 CHANNELS
BAND RANGE:	2MHz
DYNAMIC RANGE:	85dB
TOTAL HARMONIC DISTORTION:	<0.1%

RECEIVER:

POWER SUPPLY:	DC12V
CONSUMPTION POWER:	2WATT
SIGNAL NOISE RATIO:	>95dB
RECEIVING SENSITIVITY:	-80dBm

HAND MIC:

TRANSMITTER POWER:	10mW
MODULATION TYPE:	GFSK
ULTRAHARMONICS:	<20dB
BATTERY VOLTAGE:	2x1.5V AA BATTERY
BATTERY LIFE :	5 HOURS

BODY-PACK MIC

TRANSMITTER POWER:	10mW
MODULATION TYPE:	GFSK
ULTRAHARMONICS:	<20dB
BATTERY VOLTAGE:	2x1.5V AA BATTERY
BATTERY LIFE :	5 HOURS

7. BODY-PACK TRANSMITTER

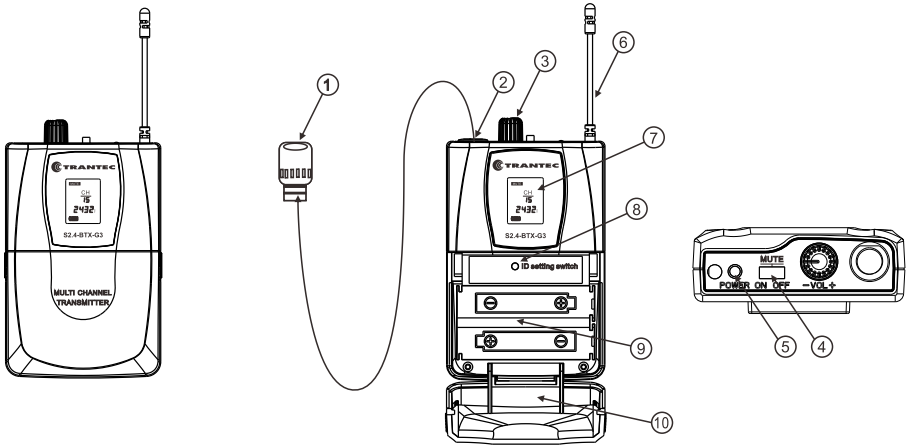

1. MICROPHONE
2. INPUT SOCKET
3. -VOL+
4. ON OFF/MUTE
5. POWER: INDICATOR WILL LIGHT IF POWER IS LOW
6. ANTENNA
7. LCD DISPLAY
8. ID SETTING SWITCH
9. BATTERY COMPARTMENT: 2X1.5V AA BATTERY, ATTENTION WITH THE RIGHT POLARITY.
10. BATTERY COVER

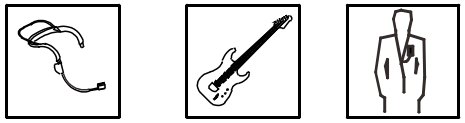

1、HEADSET 2、ELECTRONIC GUITAR 3、LAN MIC

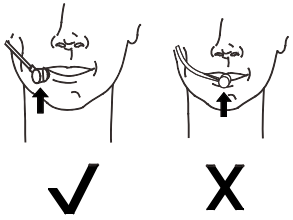

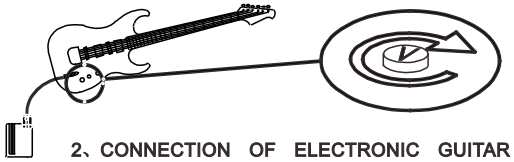

2、CONNECTION OF ELECTRONIC GUITAR

4.OPERATION OF RECEIVER

- Connection of power adaptor
  use the adapter to connect DC input jack (16).

- AUDIO OUTPUT CONNECTION
  MIX OUTPUT: Insert the audio cable to output jack(15) connect the other side to Mixer or Amplifier.
  connect MIX audio or Amplifier MIX IN or AUX IN

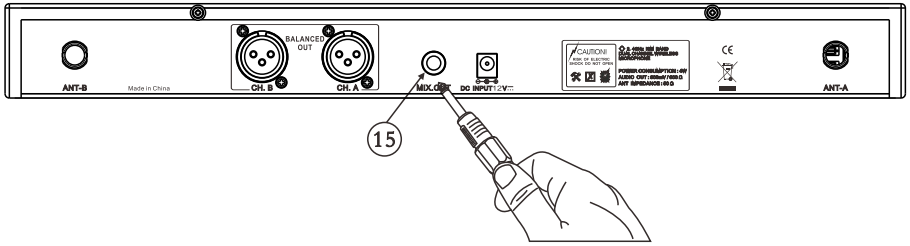

- IR SYNC STEP:
  (Under operating situation)
  Step 1: Put 2*1.5V AA batteries into the microphone compartment and turn on the microphone.

  Step 2: Press the ID button on receiver until you see the signal ⦿. at this time, you will hear a beep. Then double press the microphone power button, the microphone indicator will flash.

  Step 3: When the sound disappears and the microphone indicator stops flashing, the microphone is working.

FREQUENCY DIAGRAM

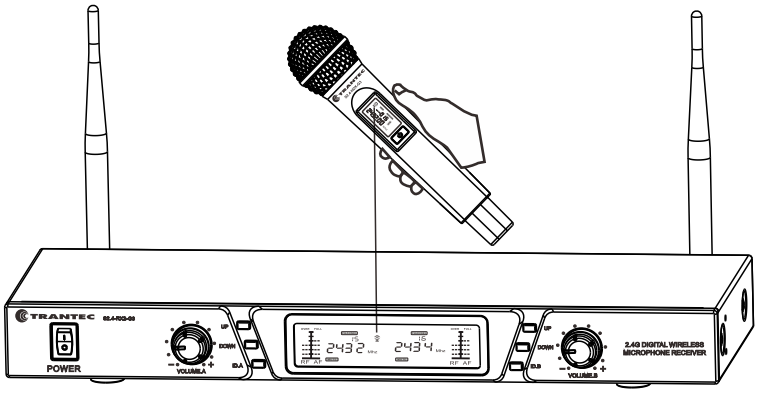

5.LCD DISPLAY

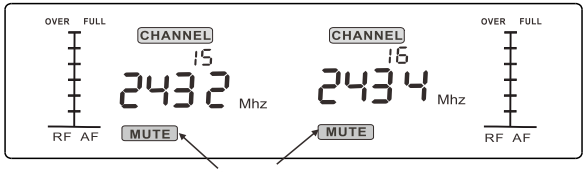

- INSTRUCTION OF LCD DISPLAY

FULL OVER RF AF	RF: Indicates signal level AF: Indicates audio level
CHANNEL 15	Ch 15: Indicates the current working channel
A B	Indicates the using Channel A or B, IR sync sign
2432 Mhz	Using frequency

- CHANNEL SELECTION OPERATION:
  Press UP or DOWN button to choose the channel you want. Please note that the A&B channel cannot use the same frequency at the same time.

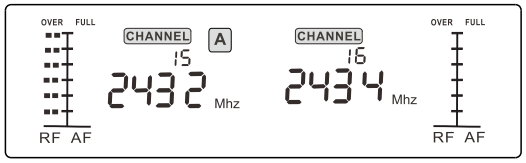

6.OPERATION OF HAND MIC

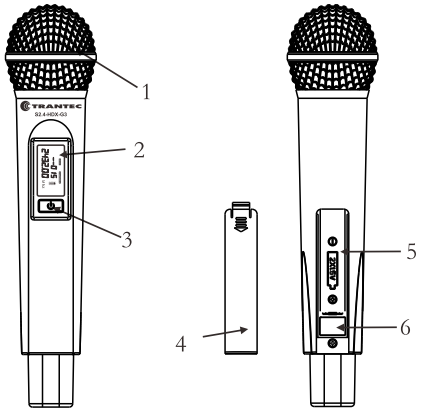

1、Grille
2、LCD display
3、Power switch
4、Battery cover
5、Battery compartment
6、Sync spot

FCC warning statement

This device complies with Part 15 of the FCC rules.
Operation is subject to the following two conditions:
1)this device may not cause harmful interference, and
2) this device must accept any interference received,
including interference that may cause undesired operation.
Changes or modifications not expressly approved by the party responsible for compliance could void the user's authority to operate the equipment.
The device has been evaluated to meet general RF exposure requirement. The device can be used
in portable exposure condition without restriction.
This device operates on a no-protection, no-interference basis. Should the user seek to obtain protection from other radio services operating in the same TV bands, a radio license is required. For further details, consult Innovation, Science and Economic Development Canada’s document Client Procedures Circular CPC-2-1-28, Voluntary Licensing of License-Exempt Low-Power Radio Apparatus in the TV Bands.

IC Caution:

This device complies with Industry Canada licence-exempt RSS standard(s).
Operation is subject to the following two conditions: (1) This device may not cause in
terference, and (2) This device must accept any interference, including interference th
at may cause undesired operation of the device.
Le présent appareil est conforme aux CNR d'Industrie Canada applicables aux apparei
ls radio exempts de licence.
L'exploitation est autorisée aux deux conditions suivantes:
(1) l'appareil ne doit pas produire de brouillage, et
(2) l'utilisateur de l'appareil doit accepter tout brouillage
radioélectrique subi, même si le
brouillage est susceptible d'en compromettre le fonctionnement.