SOLO LTE-M

SOLO 4G/3G (SK)

USER MANUAL

700050-BS

May 2022 Version 1.0

INTENTIONALLY BLANK

TABLE OF CONTENTS

INTRODUCTION

CUSTOMER SUPPORT 3
SOLO CERTIFICATIONS 4
SOLO 4
SOLO-SK 4
MANUFACTURER'S WARRANTY 4
HOW TO OBTAIN WARRANTY SERVICE 5
SAFETY 6
STANDARDS 6

OVERVIEW

OVERVIEW 7
PACKAGE CONTENTS 7
MASTER UNIT OVERVIEW 7
INSIDE THE MASTER UNIT 8

INSTALLATION

INSTALLATION 9
INSTALLATION TIPS 9
SETTING UP THE MOBILE APP 9
SOLO UNIT INSTALLATION 10
Replacing Solo Unit Batteries 10

DIAGNOSTICS

DIAGNOSTICS 11
LED DIAGNOSTICS 11
Startup Status 11
Sensor Cable Diagnostics 11

INTENTIONALLY BLANK

CUSTOMER SUPPORT

For warranty service, please contact your local dealer.

For product support, troubleshooting, or additional questions with your Bin-Sense™ device, please contact your local dealer (www.binsense.com/locate-a-dealer) or IntraGrain Technologies Inc. at:

support@intragrain.com

1.833.570.7979

www.binsense.com

Download the Bin-Sense mobile app to set up Bin-Sense Solo!

Download on the App Store

apps.apple.com/ca/app/bin-sense-mobile/id1474104575

GET IT ON Google Play

play.google.com/store/apps/details?id=com.intragrain.binsensemobile

SOLO CERTIFICATIONS

SOLO

- FCC ID: 2AUTY-106104-SO-LT
- Contains FCC ID: XPYUBX19KM01; IC 8595A-UBX19KM01

SOLO-SK

- FCC ID: 2AUTY-106104-SO-4G
- Contains FCC ID: XPY1EIQ24NN; IC 8595A-1EIQ24NN

This device complies with part 15 of the FCC Rules.

Operation is subject to the following two conditions: (1) This device may not cause harmful interference, and (2) this device must accept any interference received, including interference that may cause undesired operation.

Changes or modifications not expressly approved by IntraGrain Technologies Inc. could void the user's authority to operate the equipment.

CAUTION: This equipment has been tested and found to comply with the limits for a class a digital device, pursuant to part 15 of the FCC rules. These limits are designed to provide reasonable protection against harmful interference when the equipment is operated in a commercial environment. This equipment generates, uses, and can radiate radio frequency energy and, if not installed and used in accordance with the instruction manual, may cause harmful interference to radio communications. Operation of this equipment in a residential area is likely to cause harmful interference in which case the user will be required to correct the interference at his own expense.

WARNING: RADIO-FREQUENCY RADIATION EXPOSURE RISK. THIS EQUIPMENT COMPLIES WITH RADIATION EXPOSURE LIMITS PRESCRIBED FOR AN UNCONTROLLED ENVIRONMENT FOR FIXED AND MOBILE USE CONDITIONS. THIS EQUIPMENT SHOULD BE INSTALLED AND OPERATED WITH A MINIMUM DISTANCE OF 20 CM BETWEEN THE RADIATOR AND THE BODY OF THE USER OR NEARBY PERSONS. THIS TRANSMITTER MUST NOT BE CO-LOCATED OR OPERATING IN CONJUNCTION WITH ANY OTHER ANTENNA OR TRANSMITTER EXCEPT AS AUTHORIZED IN THE CERTIFICATION OF THE PRODUCT.

MANUFACTURER'S WARRANTY

INTRAGRAIN LIMITED ONE-YEAR WARRANTY

IntraGrain Technologies Inc. (IntraGrain) warrants that for a period of one (1) year from the date of original purchase, this product will be free from defects in material and workmanship. IntraGrain, at its option, will repair or replace this product or any component of the product found to be defective during this warranty period. Replacement will be made with a new or re-manufactured product or component. No warranty is provided for batteries.

WHAT THIS WARRANTY DOES NOT COVER

This warranty does not cover normal wear of parts or any damage resulting from any of the following: negligent use or misuse of the product; damage in transport, natural disaster, improper installation or use, improper abuse or improper handling. This warranty is limited to only those manufacturing defects that were caused or allowed by IntraGrain.

HOW TO OBTAIN WARRANTY SERVICE

Please contact the local dealer you purchased the product from. For additional support, please contact IntraGrain Technologies Inc. at 1.833.570.7979 or visit www.intragrain.com

CONTACT US

For support questions, troubleshooting, or help with your Bin-Sense device, please contact your local dealer for more information and assistance, or IntraGrain Technologies Inc. at support@intragrain.com or 1.833.570.7979.

SAFETY

READ AND FOLLOW ALL INSTRUCTIONS.

SAVE THESE INSTRUCTIONS.

Use the Solo device for its intended use only, as described in this manual. Do not use attachments not recommended by the manufacturer.

STANDARDS

This manual will use the following standard safety terms and conventions to indicate conditions:

WARNING: INDICATES A HAZARDOUS SITUATION RESULTING IN SERIOUS INJURY OR DEATH.

CAUTION: Indicates a hazardous situation which, if not avoided, could result in moderate injury and/or property damage.

Note: Indicates an important message not related to personal injury or property damage.

OVERVIEW

The Solo unit is used to automatically read up to four sensing cables once daily and send grain condition information to the Bin-Sense Mobile app using a cellular connection. Each bin to be monitored requires the installation of one Solo unit.

Two different versions of Solo are available depending on the cellular service available in the area.

Solo LTE-M

The Solo LTE-M uses new LTE-M technology optimized for Internet-of-Things (IoT) applications, recommended for use across North America, excluding Saskatchewan.

Solo 4G/3G (SK)

The Solo 4G/3G (SK) version uses a conventional 4G cellular connection with 3G backup (where still available)—not recommended for use outside Saskatchewan.

PACKAGE CONTENTS

- Bin-Sense Solo Unit
- 4 x Lithium AA batteries (for Solo LTE-M)
- 8 x Lithium AA batteries (for Solo 4G/3G (SK))

MASTER UNIT OVERVIEW

A. LID LATCH CLIPS

B. MAGNETIC FEET

C. SENSOR LINK CABLE

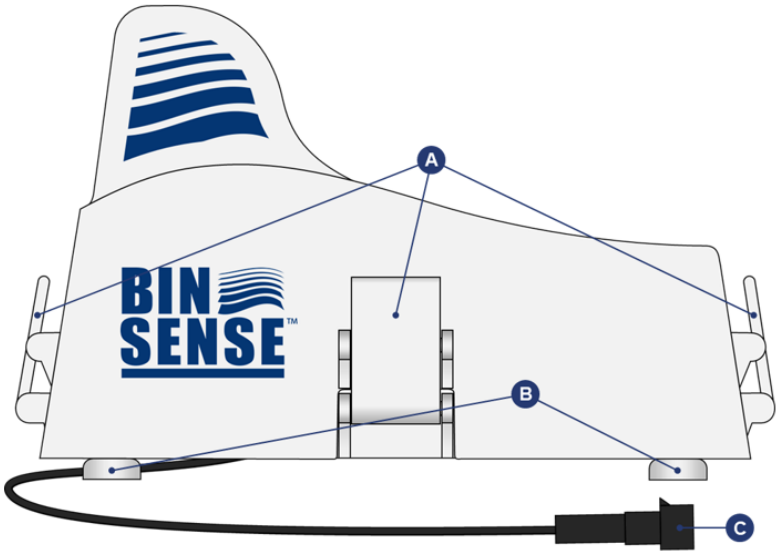

Figure 1: Bin-Sense Solo Overview

INSIDE THE MASTER UNIT

A. CELLULAR ANTENNA
B. STATUS LED
C. 4 X AA BATTERY CLIP
D. ADDITIONAL 4 X AA BATTERY CLIP (SOLO 4G/3G ONLY)
E. SIM CARD
F. TEST BUTTON
G. RESET BUTTON

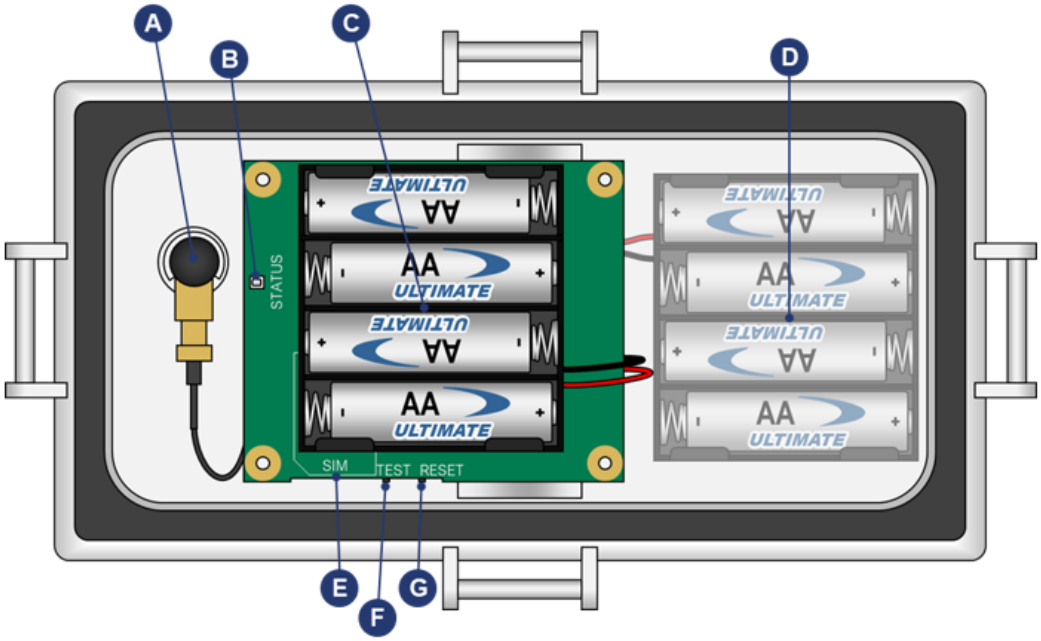

Figure 2: Bin-Sense Solo - Interior

INSTALLATION

WARNING: FALL HAZARD - EXTREME CARE AND CAUTION MUST BE USED WHEN CLIMBING IN A BIN OR SILO. BE SURE TO USE APPROVED SAFETY PROCEDURES AND MATERIALS. WHEN WORKING ABOVE 1.2 METERS, WEAR A SAFETY HARNESS OR PERSONAL PROTECTIVE EQUIPMENT. AN APPROVED TOOL BELT MUST BE WORN TO KEEP BOTH HANDS FREE WHEN CLIMBING UP AND DOWN A LADDER.

INSTALLATION TIPS

- Solo units can be installed on the top or bottom of the bin.

  - On new installations, installing the Solo unit on the roof of the bin near the sensing cable(s) is recommended to minimize the link cables required.

  - When retrofitting Solo onto a bin previously monitored with Bin-Sense Direct, it is recommended to install the Solo unit at the bottom of the bin connected to the existing ground-level Direct link cable connection. This eliminates the need to climb the bin during installation.

- When positioning the Solo unit, remember to consider things like bin lid movement and the path the auger will take and avoid placing components where they will interfere.

- Whenever possible, secure link cables so that they run downward, away from the enclosure and cable grip. This will prevent water from running along the cable and towards the Solo unit enclosure.

- Prevent moisture (e.g. rain, snow) from entering the enclosure when opening the enclosure lid during installation.

- When finished with the installation, make sure the enclosure lid is closed and latched securely and there are no wires, tags, or other objects caught between the lid and the enclosure which could cause water ingress.

SETTING UP THE MOBILE APP

1. Create an account or log in on the Bin-Sense mobile app.
2. Navigate to the site where you want to add the Solo unit. If required, create a new site (i.e. bin yard) by tapping the + button in the top right corner and then selecting “Create Site”.
3. Once on the correct site, tap the + button in the top right corner and then tap “Add Solo Unit”.
4. Follow the step-by-step instructions to finish adding the device to a bin on the app.

SOLO UNIT INSTALLATION

Carry the Solo unit and any tools and accessories to the top of the bin in a manner that allows both hands free to safely climb the bin.

1. Place the Solo unit on the bin with the antenna fin end of the enclosure closest to the ground. The sensor link cable should point towards the ground to prevent water from running towards the enclosure. The magnetic feet will hold the unit in place on the bin.

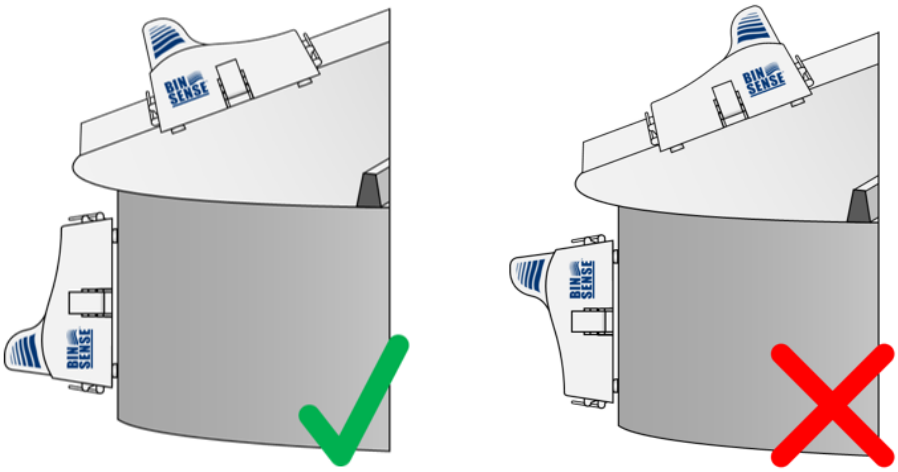

Figure 3: Bin-Sense Solo Unit Placement

2. Connect the sensor link cable to the sensing cable(s) installed in the bin. A terminal box or splitter is required to connect more than one sensing cable to the sensor link cable.

Note: Solo units can read a maximum of four cables with up to 12 sensors each.

3. Open the four latch clips and remove the lid from the Solo unit.
4. Remove the **"Remove before use"** tab(s) from the battery clip(s). Solo LTE-M has one battery tab, Solo 4G/3G (SK) has two battery tabs.
5. Watch the status LED and verify it has turned solid green to confirm the Solo unit is connected to a cell tower and Bin-Sense servers. See the LED diagnostics section for more details.
6. Use the mobile app to verify that the Solo unit is properly sending data to the Bin-Sense App and that all the connected cables are detected properly.

REPLACING SOLO UNIT BATTERIES

Solo units are designed to run for five years on one set of batteries.

Use only Lithium AA batteries in Solo units (Lithium/Iron Disulfide). Other battery types may prevent Solo units from operating normally. When replacing batteries in a Solo unit, completely remove all depleted batteries before installing any new batteries.

DIAGNOSTICS

LED DIAGNOSTICS

The diagnostic LED on the Solo units give information about any attached sensor cables as well as cellular connection status.

STARTUP STATUS

When a Solo device is first powered on and connecting the Bin-Sense servers, the status LED will show different colour and flash patterns to convey the current status.

LED Pattern	Solo Unit Status
Flashing Orange	Starting up
Solid Orange	Connecting to cell tower
Flashing Green	Connected to cell tower, connecting to Bin-Sense servers
Solid Green	Successfully connected to Bin-Sense servers
Flashing Red	Could not connect to Bin-Sense servers
Solid Red	Could not connect to cell tower

SENSOR CABLE DIAGNOSTICS

Pressing the test button on a Solo unit will cause the status LED to give information about the attached sensing cables. Bin-Sense Solo uses the same LED blinking pattern as other Bin-Sense products that you may already be familiar with.

The status LED flashes different colors to convey different information. Red flashes tell what information is being communicated, and orange and green flashes indicate the number. The status LED will flash red first, and then orange and green to tell the value that corresponds to the red flashes. The process will repeat until all the information has been communicated.

Number of Red Flashes	Information to Convey
1	Number of temperature/moisture cables read
2	Total number of sensors temperature/moisture read
3	Total number of moisture sensors read

Flash Colour	Value
Orange	10
Green	1

The status LED will only flash a specific number of red flashes if the corresponding number is not zero. For example, if there are no moisture cables connected to the Solo unit, the LED will not flash three red flashes. If nothing is detected on the sensor cable interface, the LED will flash once.

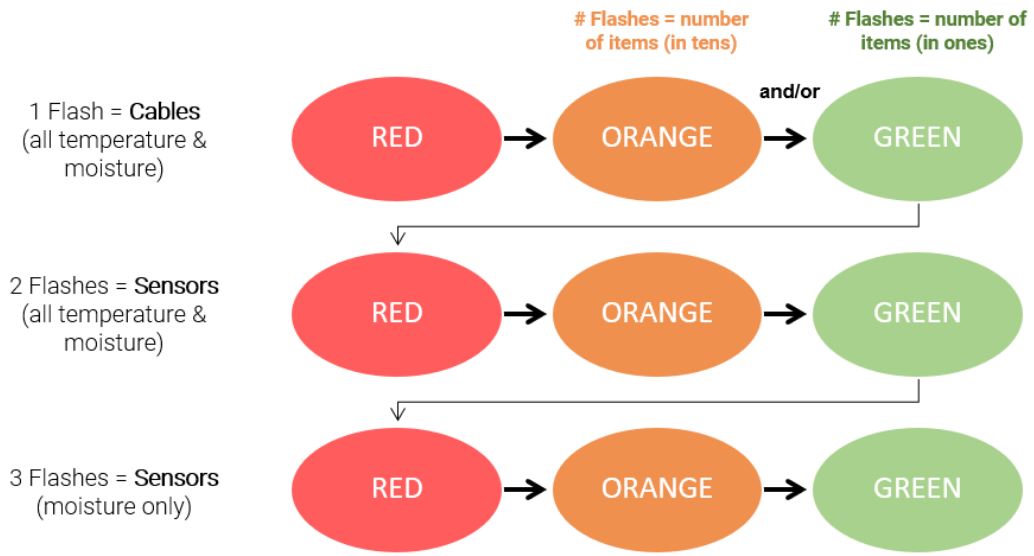

Figure 4: Diagnostic LED Sequence

Manufactured in Canada by:

INTRAGRAIN
A Calian Company

Head Office:

IntraGrain Technologies Inc.
118 Husum Road
RM of Sherwood, SK CANADA
S4K 0A4

support@intragrain.com

1-833-570-7979

www.binsense.com

BIN SENSE™