RADIO TEST REPORT
FCC ID: 2AUVWPB740-2

Product: InkPad 3 Pro
Trade Mark: PocketBook
Model No.: PB740-2
Family Model: N/A
Report No.: S19101103702001
Issue Date: 22 Nov. 2019

Prepared for

Pocketbook International SA.
Crocicchio Cortogna, 6, 6900, Lugano, Switzerland.

Prepared by

Shenzhen NTEK Testing Technology Co., Ltd.
1/F, Building E, Fenda Science Park, Sanwei Community,
Xixiang Street Bao'an District, Shenzhen 518126 P.R. China
Tel.: +86-755-6115 6588
Fax.: +86-755-6115 6599
Website:http://www.ntek.org.cn

TABLE OF CONTENTS

1 TEST RESULT CERTIFICATION 3

2 SUMMARY OF TEST RESULTS 4

3 FACILITIES AND ACCREDITATIONS 5

3.1 FACILITIES 5
3.2 LABORATORY ACCREDITATIONS AND LISTINGS 5
3.3 MEASUREMENT UNCERTAINTY 5

4 GENERAL DESCRIPTION OF EUT 6

5 DESCRIPTION OF TEST MODES 8

6 SETUP OF EQUIPMENT UNDER TEST 9

6.1 BLOCK DIAGRAM CONFIGURATION OF TEST SYSTEM 9
6.2 SUPPORT EQUIPMENT 10
6.3 EQUIPMENTS LIST FOR ALL TEST ITEMS 11

7 TEST REQUIREMENTS 13

7.1 CONDUCTED EMISSIONS TEST 13
7.2 RADIATED SPURIOUS EMISSION 18
7.3 NUMBER OF HOPPING CHANNEL 27
7.4 HOPPING CHANNEL SEPARATION MEASUREMENT 28
7.5 AVERAGE TIME OF OCCUPANCY (DWELL TIME) 29
7.6 20DB BANDWIDTH TEST 31
7.7 PEAK OUTPUT POWER 32
7.8 CONDUCTED BAND EDGE MEASUREMENT 33
7.9 SPURIOUS RF CONDUCTED EMISSION 34
7.10 ANTENNA APPLICATION 35
7.11 FREQUENCY HOPPING SYSTEM (FHSS) EQUIPMENT REQUIREMENTS 36

8 TEST RESULTS 37

8.1 DWELL TIME 37
8.2 MAXIMUM CONDUCTED OUTPUT POWER 42
8.3 OCCUPIED CHANNEL BANDWIDTH 47
8.4 CARRIER FREQUENCIES SEPARATION 57
8.5 NUMBER OF HOPPING CHANNEL 62
8.6 BAND EDGE 63
8.7 CONDUCTED RF SPURIOUS EMISSION 76

1 TEST RESULT CERTIFICATION

Applicant's name.....:	Pocketbook International SA.
Address.....:	Crocicchio Cortogna, 6, 6900, Lugano, Switzerland.
Manufacturer's Name.....:	Shenzhen Yitoa Digital Appliance Co., Ltd.
Address.....:	6F, A1 Building, Longma industrial Park, Shiyan Town, Baoan, Shenzhen, China
Product description	
Product name.....:	InkPad 3 Pro
Model and/or type reference .....:	PB740-2
Family Model.....:	N/A

Measurement Procedure Used:

APPLICABLE STANDARDS	
STANDARD/ TEST PROCEDURE	TEST RESULT
FCC 47 CFR Part 2, Subpart J FCC 47 CFR Part 15, Subpart C KDB 174176 D01 Line Conducted FAQ v01r01 ANSI C63.10-2013 KDB 558074 D01 15.247 Meas Guidance v05r02	Complied

This device described above has been tested by Shenzhen NTEK Testing Technology Co., Ltd., and the test results show that the equipment under test (EUT) is in compliance with the FCC requirements. And it is applicable only to the tested sample identified in the report.
This report shall not be reproduced except in full, without the written approval of Shenzhen NTEK Testing Technology Co., Ltd., this document may be altered or revised by Shenzhen NTEK Testing Technology Co., Ltd., personnel only, and shall be noted in the revision of the document.

The test results of this report relate only to the tested sample identified in this report.

Date of Test : 12 Nov. 2019 ~ 22 Nov. 2019

Testing Engineer : Jerry Xie
(Jerry Xie)

Technical Manager : Jason chen
(Jason Chen)

Authorized Signatory : Sam. Chen
(Sam Chen)

2 SUMMARY OF TEST RESULTS

FCC Part15 (15.247), Subpart C			
Standard Section	**Test Item**	**Verdict**	**Remark**
15.207	Conducted Emission	PASS	
15.209 (a) 15.205 (a)	Radiated Spurious Emission	PASS	
15.247(a)(1)	Hopping Channel Separation	PASS	
15.247(b)(1)	Peak Output Power	PASS	
15.247(a)(iii)	Number of Hopping Frequency	PASS	
15.247(a)(iii)	Dwell Time	PASS	
15.247(a)(1)	Bandwidth	PASS	
15.247 (d)	Band Edge Emission	PASS	
15.247 (d)	Spurious RF Conducted Emission	PASS	
15.203	Antenna Requirement	PASS	

Remark:
1. "N/A" denotes test is not applicable in this Test Report.
2. All test items were verified and recorded according to the standards and without any deviation during the test.
3. This EUT has also been tested and complied with the requirements of FCC Part 15, Subpart B, recorded in a separate test report.

3 FACILITIES AND ACCREDITATIONS

3.1 FACILITIES

All measurement facilities used to collect the measurement data are located at
1/F, Building E, Fenda Science Park, Sanwei Community, Xixiang Street, Bao'an District, Shenzhen 518126 P.R. China.
The sites are constructed in conformance with the requirements of ANSI C63.7, ANSI C63.10 and CISPR Publication 22.

3.2 LABORATORY ACCREDITATIONS AND LISTINGS

Site Description

CNAS-Lab.	:	The Laboratory has been assessed and proved to be in compliance with CNAS-CL01:2006 (identical to ISO/IEC 17025:2005) The Certificate Registration Number is L5516.
IC-Registration		The Certificate Registration Number is 9270A. CAB identifier:CN0074
FCC- Accredited		Test Firm Registration Number: 463705. Designation Number: CN1184
A2LA-Lab.		The Certificate Registration Number is 4298.01 This laboratory is accredited in accordance with the recognized International Standard ISO/IEC 17025:2005 General requirements for the competence of testing and calibration laboratories. This accreditation demonstrates technical competence for a defined scope and the operation of a laboratory quality management system (refer to joint ISO-ILAC-IAF Communiqué dated 8 January 2009).
Name of Firm	:	Shenzhen NTEK Testing Technology Co., Ltd.
Site Location	:	1/F, Building E, Fenda Science Park, Sanwei Community, Xixiang Street, Bao'an District, Shenzhen 518126 P.R. China.

3.3 MEASUREMENT UNCERTAINTY

The reported uncertainty of measurement y±U, where expended uncertainty U is based on a standard uncertainty multiplied by a coverage factor of k=2, providing a level of confidence of approximately 95 %.

No.	Item	Uncertainty
1	Conducted Emission Test	±2.80dB
2	RF power, conducted	±0.16dB
3	Spurious emissions, conducted	±0.21dB
4	All emissions, radiated(30MHz~1GHz)	±2.64dB
5	All emissions, radiated(1GHz~6GHz)	±2.40dB
6	All emissions, radiated(＞6GHz)	±2.52dB
7	Temperature	±0.5°C
8	Humidity	±2%

4 GENERAL DESCRIPTION OF EUT

Product Feature and Specification	
Equipment	InkPad 3 Pro
Trade Mark	PocketBook
FCC ID	2AUVWPB740-2
Model No.	PB740-2
Family Model	N/A
Model Difference	N/A
Operating Frequency	2402MHz~2480MHz
Modulation	GFSK, π/4-DQPSK, 8-DPSK
Bluetooth Version	BT V4.0
Number of Channels	79 Channels
Antenna Type	Ceramic Antenna
Antenna Gain	2.5dBi
Power supply	☒DC supply: DC 3.7V/1900mAh from Battery or DC 5V from USB Port.
	☐Adapter supply
HW Version	N/A
SW Version	N/A

Note: Based on the application, features, or specification exhibited in User's Manual, the EUT is considered as an ITE/Computing Device. More details of EUT technical specification, please refer to the User's Manual.

Revision History

Report No.	Version	Description	Issued Date
S19101103702001	Rev.01	Initial issue of report	Nov 22, 2019

5 DESCRIPTION OF TEST MODES

To investigate the maximum EMI emission characteristics generates from EUT, the test system was pre-scanning tested base on the consideration of following EUT operation mode or test configuration mode which possible have effect on EMI emission level. Each of these EUT operation mode(s) or test configuration mode(s) mentioned above was evaluated respectively.
The Transmitter was operated in the normal operating mode. The TX frequency was fixed which was for the purpose of the measurements.

Test of channel included the lowest and middle and highest frequency to perform the test, then record on this report.

Those data rates (1Mbps for GFSK modulation; 2Mbps for π/4-DQPSK modulation; 3Mbps for 8-DPSK modulation) were used for all test.
The EUT was pretested with 3 orientations placed on the table for the radiated emission measurement –X, Y, and Z-plane. The X-plane results were found as the worst case and were shown in this report.

Carrier Frequency and Channel list:

Channel	Frequency(MHz)
0	2402
1	2403
…	…
39	2441
40	2442
…	…
77	2479
78	2480

Note: fc=2402MHz+k×1MHz k=0 to 78(k is the Channel)
The following summary table is showing all test modes to demonstrate in compliance with the standard.

For AC Conducted Emission	
Final Test Mode	Description
Mode 1	normal link mode

Note: AC power line Conducted Emission was tested under maximum output power.

For Radiated Test Cases	
Final Test Mode	Description
Mode 1	normal link mode
Mode 2	CH00(2402MHz)
Mode 3	CH39(2441MHz)
Mode 4	CH78(2480MHz)

Note: For radiated test cases, the worst mode data rate 1Mbps was reported only, because this data rate has the highest RF output power at preliminary tests, and no other significantly frequencies found in conducted spurious emission.

For Conducted Test Cases	
Final Test Mode	Description
Mode 2	CH00(2402MHz)
Mode 3	CH39(2441MHz)
Mode 4	CH78(2480MHz)
Mode 5	Hopping mode

Note: The engineering test program was provided and the EUT was programmed to be in continuously transmitting mode.

6 SETUP OF EQUIPMENT UNDER TEST

6.1 BLOCK DIAGRAM CONFIGURATION OF TEST SYSTEM

For AC Conducted Emission Mode

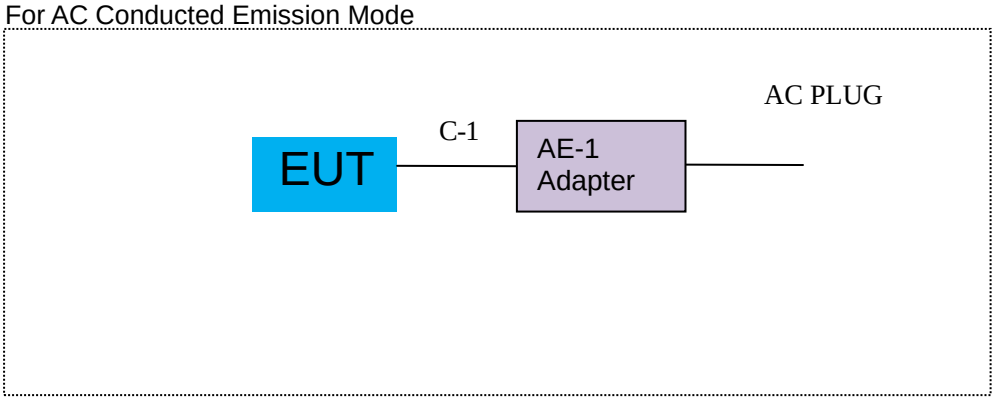

For Radiated Test Cases

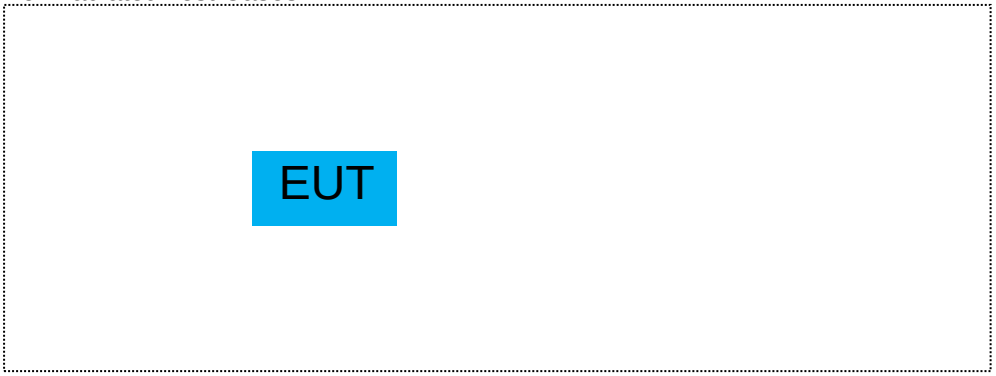

For Conducted Test Cases

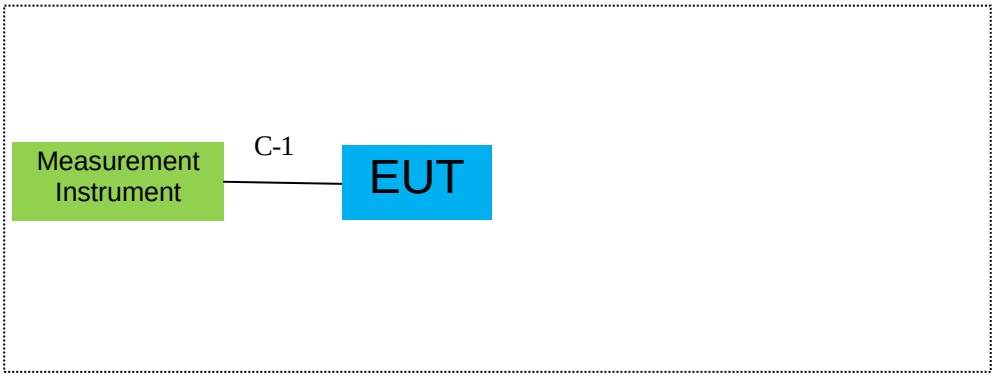

Note: 1. The temporary antenna connector is soldered on the PCB board in order to perform conducted tests and this temporary antenna connector is listed in the equipment list.

2. EUT built-in battery-powered, the battery is fully-charged.

6.2 SUPPORT EQUIPMENT

The EUT has been tested as an independent unit together with other necessary accessories or support units. The following support units or accessories were used to form a representative test configuration during the tests.

Item	Equipment	Mfr/Brand	Model/Type No.	Series No.	Note
AE-1	Adapter	N/A	N/A	N/A	Peripherals

Item	Cable Type	Shielded Type	Ferrite Core	Length
C-1	USB Cable	NO	NO	0.5m
C-2	RF Cable	YES	NO	0.1m

Notes:

(1) The support equipment was authorized by Declaration of Confirmation.
(2) For detachable type I/O cable should be specified the length in cm in『Length』column.
(3) “YES” is means “shielded” “with core”; “NO” is means “unshielded” “without core”.

6.3 EQUIPMENTS LIST FOR ALL TEST ITEMS

Radiation& Conducted Test equipment

Item	Kind of Equipment	Manufacturer	Type No.	Serial No.	Last calibration	Calibrated until	Calibration period
1	Spectrum Analyzer	Aglient	E4407B	MY45108040	2019.05.13	2020.05.12	1 year
2	Spectrum Analyzer	Agilent	N9020A	MY49100060	2019.08.28	2020.08.27	1 year
3	Spectrum Analyzer	R&S	FSV40	101417	2019.08.28	2020.08.27	1 year
4	Test Receiver	R&S	ESPI7	101318	2019.05.13	2020.05.12	1 year
5	Bilog Antenna	TESEQ	CBL6111D	31216	2019.04.15	2020.04.14	1 year
6	50Ω Coaxial Switch	Anritsu	MP59B	6200983705	2018.05.19	2020.05.18	2 year
7	Horn Antenna	EM	EM-AH-10180	2011071402	2019.04.15	2020.04.14	1 year
8	Broadband Horn Antenna	SCHWARZBECK	BBHA 9170	803	2018.12.11	2019.12.10	1 year
9	Amplifier	EMC	EMC051835SE	980246	2019.08.06	2020.08.05	1 year
10	Active Loop Antenna	SCHWARZBECK	FMZB 1519 B	055	2018.12.11	2019.12.10	1 year
11	Power Meter	DARE	RPR3006W	15I00041SNO84	2019.08.06	2020.08.05	1 year
12	Test Cable (9KHz-30MHz)	N/A	R-01	N/A	2017.04.21	2020.04.20	3 year
13	Test Cable (30MHz-1GHz)	N/A	R-02	N/A	2017.04.21	2020.04.20	3 year
14	High Test Cable(1G-40GHz)	N/A	R-03	N/A	2017.04.21	2020.04.20	3 year
15	High Test Cable(1G-40GHz)	N/A	R-04	N/A	2017.04.21	2020.04.20	3 year
16	Filter	TRILTHIC	2400MHz	29	2017.04.19	2020.04.18	3 year
17	temporary antenna connector (Note)	NTS	R001	N/A	N/A	N/A	N/A

Note:
We will use the temporary antenna connector (soldered on the PCB board) When conducted test
And this temporary antenna connector is listed within the instrument list

AC Conduction Test equipment

Item	Kind of Equipment	Manufacturer	Type No.	Serial No.	Last calibration	Calibrated until	Calibration period
1	Test Receiver	R&S	ESCI	101160	2019.05.13	2020.05.12	1 year
2	LISN	R&S	ENV216	101313	2019.04.15	2020.04.14	1 year
3	LISN	SCHWARZBECK	NNLK 8129	8129245	2019.05.13	2020.05.12	1 year
4	50Ω Coaxial Switch	ANRITSU CORP	MP59B	6200983704	2018.05.19	2020.05.18	2 year
5	Test Cable (9KHz-30MHz)	N/A	C01	N/A	2017.04.21	2020.04.20	3 year
6	Test Cable (9KHz-30MHz)	N/A	C02	N/A	2017.04.21	2020.04.20	3 year
7	Test Cable (9KHz-30MHz)	N/A	C03	N/A	2017.04.21	2020.04.20	3 year

Note: Each piece of equipment is scheduled for calibration once a year except the Aux Equipment & Test Cable which is scheduled for calibration every 2 or 3 years.

7 TEST REQUIREMENTS

7.1 CONDUCTED EMISSIONS TEST

7.1.1 Applicable Standard

According to FCC Part 15.207(a) and KDB 174176 D01 Line Conducted FAQ v01r01

7.1.2 Conformance Limit

Frequency(MHz)	Conducted Emission Limit	
	Quasi-peak	Average
0.15-0.5	66-56*	56-46*
0.5-5.0	56	46
5.0-30.0	60	50

Note: 1. *Decreases with the logarithm of the frequency
2. The lower limit shall apply at the transition frequencies
3. The limit decreases in line with the logarithm of the frequency in the range of 0.15 to 0.50MHz.

7.1.3 Test Configuration

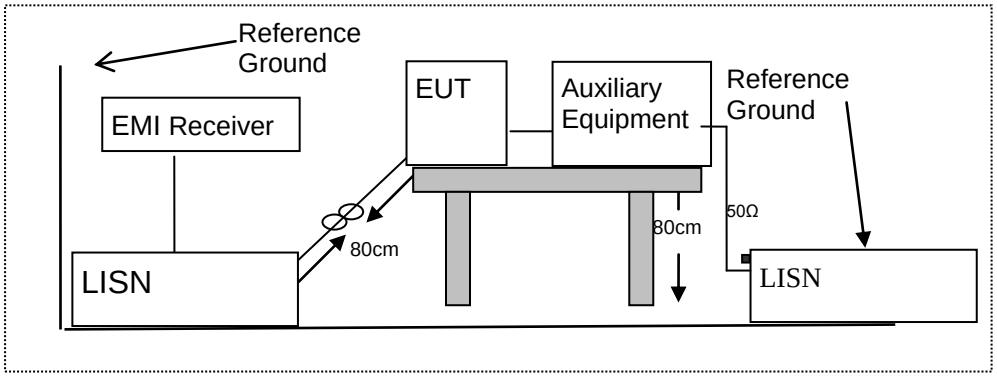

7.1.4 Test Procedure

According to the requirements in Section 13.1.4.1 of ANSI C63.10-2013 Conducted emissions the EUT measured in the frequency range between 0.15 MHz and 30 MHz using CISPR Quasi-Peak and average detector mode.

1. The EUT was placed 0.4 meter from the conducting wall of the shielding room.
2. The EUT was placed on a table which is 0.8m above ground plane.
3. Connect EUT to the power mains through a line impedance stabilization network (LISN). All other support equipments powered from additional LISN(s). The LISN provide 50 Ohm/ 50uH of coupling impedance for the measuring instrument.
4. Interconnecting cables that hang closer than 40 cm to the ground plane shall be folded back and forth in the center forming a bundle 30 to 40cm long.
5. I/O cables that are not connected to a peripheral shall be bundled in the center. The end of the cable may be terminated, if required, using the correct terminating impedance. The overall length shall not exceed 1 m.
6. LISN at least 80 cm from nearest part of EUT chassis.
7. The frequency range from 150KHz to 30MHz was searched.
8. Set the test-receiver system to Peak Detect Function and specified bandwidth(IF bandwidth=9KHz) with Maximum Hold Mode
9. For the actual test configuration, please refer to the related Item –EUT Test Photos.

7.1.5 Test Results

Pass

7.1.6 Test Results

EUT:	InkPad 3 Pro	Model Name :	PB740-2
Temperature:	26 ℃	Relative Humidity:	54%
Pressure:	1010hPa	Phase :	L
Test Voltage :	DC 5V from Adapter AC 120V/60Hz	Test Mode:	Mode 1

Frequency (MHz)	Reading Level (dBμV)	Correct Factor (dB)	Measure-ment (dBμV)	Limits (dBμV)	Margin (dB)	Remark
0.1539	32.70	9.75	42.45	65.78	-23.33	QP
0.1539	20.27	9.75	30.02	55.78	-25.76	AVG
0.5620	30.68	9.74	40.42	56.00	-15.58	QP
0.5620	20.71	9.74	30.45	46.00	-15.55	AVG
0.7940	26.81	9.74	36.55	56.00	-19.45	QP
0.7940	15.16	9.74	24.90	46.00	-21.10	AVG
1.9658	23.12	9.78	32.90	56.00	-23.10	QP
1.9658	11.35	9.78	21.13	46.00	-24.87	AVG
3.4060	22.14	9.84	31.98	56.00	-24.02	QP
3.4060	10.55	9.84	20.39	46.00	-25.61	AVG
5.9458	19.40	9.88	29.28	60.00	-30.72	QP
5.9458	9.82	9.88	19.70	50.00	-30.30	AVG

Remark:
1. All readings are Quasi-Peak and Average values.
2. Factor = Insertion Loss + Cable Loss.

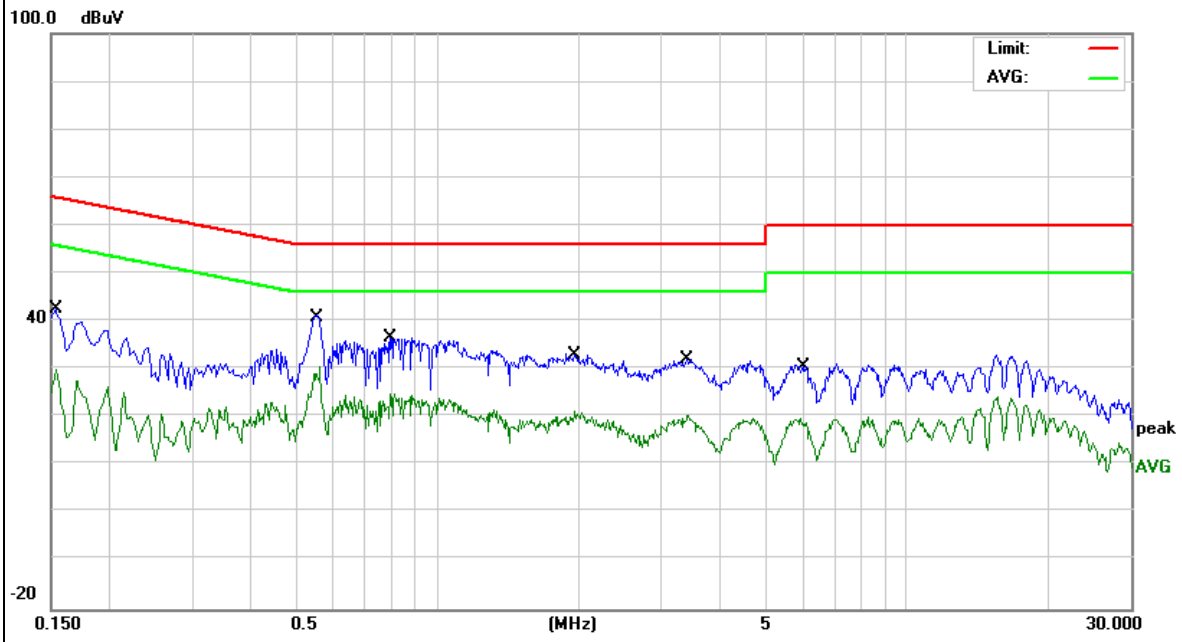

EUT：	InkPad 3 Pro	Model Name ：	PB740-2
Temperature：	26 ℃	Relative Humidity：	54%
Pressure：	1010hPa	Phase :	N
Test Voltage ：	DC 5V from Adapter AC 120V/60Hz	Test Mode：	Mode 1

Frequency (MHz)	Reading Level (dBμV)	Correct Factor (dB)	Measure-ment (dBμV)	Limits (dBμV)	Margin (dB)	Remark
0.1739	28.76	9.73	38.49	64.77	-26.28	QP
0.1739	19.00	9.73	28.73	54.77	-26.04	AVG
0.3459	22.62	9.74	32.36	59.06	-26.70	QP
0.3459	17.76	9.74	27.50	49.06	-21.56	AVG
0.5620	34.18	9.75	43.93	56.00	-12.07	QP
0.5620	27.35	9.75	37.10	46.00	-8.90	AVG
0.9539	22.94	9.75	32.69	56.00	-23.31	QP
0.9539	15.52	9.75	25.27	46.00	-20.73	AVG
1.3580	22.55	9.76	32.31	56.00	-23.69	QP
1.3580	14.00	9.76	23.76	46.00	-22.24	AVG
16.0538	19.67	10.11	29.78	60.00	-30.22	QP
16.0538	13.60	10.11	23.71	50.00	-26.29	AVG

Remark:
1. All readings are Quasi-Peak and Average values.
2. Factor = Insertion Loss + Cable Loss.

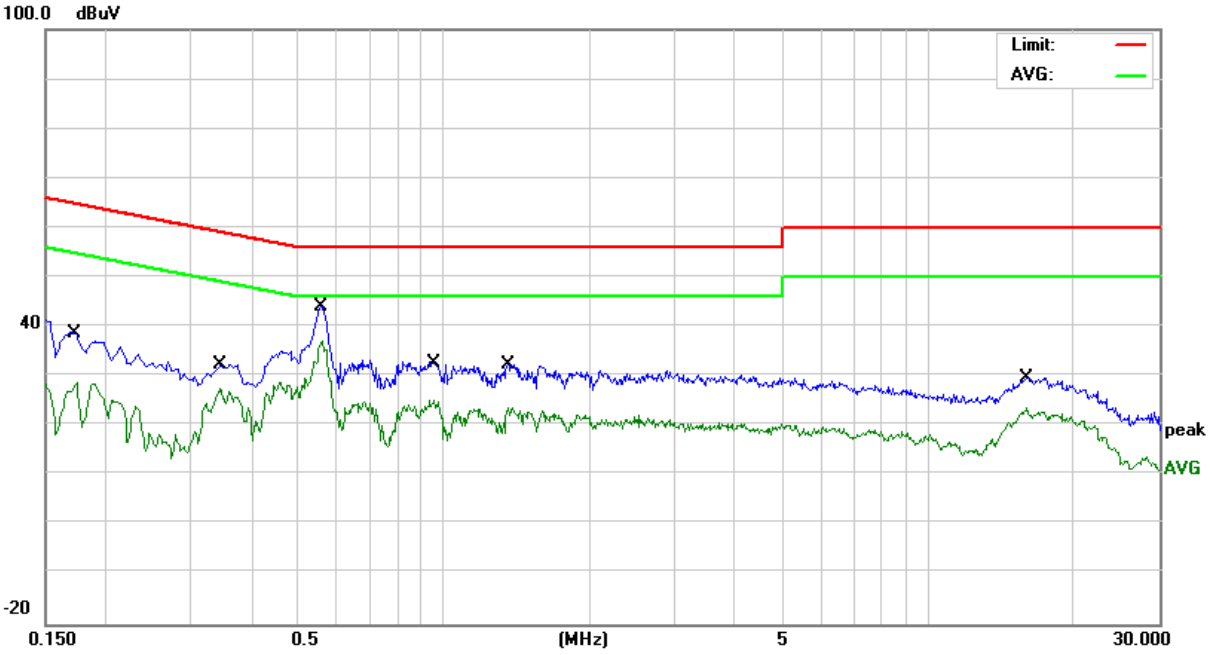

EUT：	InkPad 3 Pro	Model Name ：	PB740-2
Temperature：	26 ℃	Relative Humidity：	54%
Pressure：	1010hPa	Phase :	L
Test Voltage ：	DC 5V from Adapter AC 240V/60Hz	Test Mode：	Mode 1

Frequency (MHz)	Reading Level (dBμV)	Correct Factor (dB)	Measure-ment (dBμV)	Limits (dBμV)	Margin (dB)	Remark
0.4060	20.53	9.74	30.27	57.73	-27.46	QP
0.4060	11.94	9.74	21.68	47.73	-26.05	AVG
0.5658	28.98	9.74	38.72	56.00	-17.28	QP
0.5658	17.54	9.74	27.28	46.00	-18.72	AVG
0.7860	24.05	9.74	33.79	56.00	-22.21	QP
0.7860	13.96	9.74	23.70	46.00	-22.30	AVG
1.0220	23.25	9.74	32.99	56.00	-23.01	QP
1.0220	12.62	9.74	22.36	46.00	-23.64	AVG
1.6819	19.98	9.77	29.75	56.00	-26.25	QP
1.6819	9.44	9.77	19.21	46.00	-26.79	AVG
15.8739	19.61	10.12	29.73	60.00	-30.27	QP
15.8739	11.68	10.12	21.80	50.00	-28.20	AVG

Remark:
1. All readings are Quasi-Peak and Average values.
2. Factor = Insertion Loss + Cable Loss.

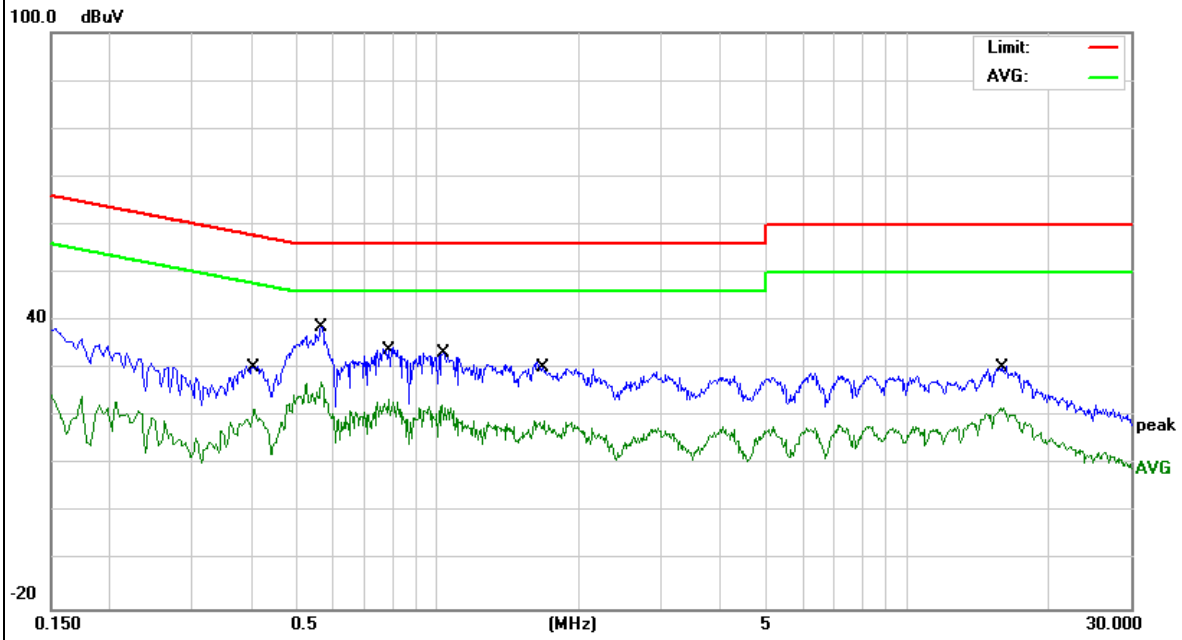

EUT：	InkPad 3 Pro	Model Name ：	PB740-2
Temperature：	26 ℃	Relative Humidity：	54%
Pressure：	1010hPa	Phase :	N
Test Voltage ：	DC 5V from Adapter AC 240V/60Hz	Test Mode：	Mode 1

Frequency (MHz)	Reading Level (dBμV)	Correct Factor (dB)	Measure-ment (dBμV)	Limits (dBμV)	Margin (dB)	Remark
0.4259	23.58	9.75	33.33	57.33	-24.00	QP
0.4259	17.22	9.75	26.97	47.33	-20.36	AVG
0.5420	30.36	9.75	40.11	56.00	-15.89	QP
0.5420	23.92	9.75	33.67	46.00	-12.33	AVG
0.8219	22.71	9.75	32.46	56.00	-23.54	QP
0.8219	16.09	9.75	25.84	46.00	-20.16	AVG
1.0820	21.39	9.75	31.14	56.00	-24.86	QP
1.0820	14.31	9.75	24.06	46.00	-21.94	AVG
1.4539	20.99	9.77	30.76	56.00	-25.24	QP
1.4539	15.06	9.77	24.83	46.00	-21.17	AVG
15.7659	15.16	10.11	25.27	60.00	-34.73	QP
15.7659	8.68	10.11	18.79	50.00	-31.21	AVG

Remark:

1. All readings are Quasi-Peak and Average values.
2. Factor = Insertion Loss + Cable Loss.

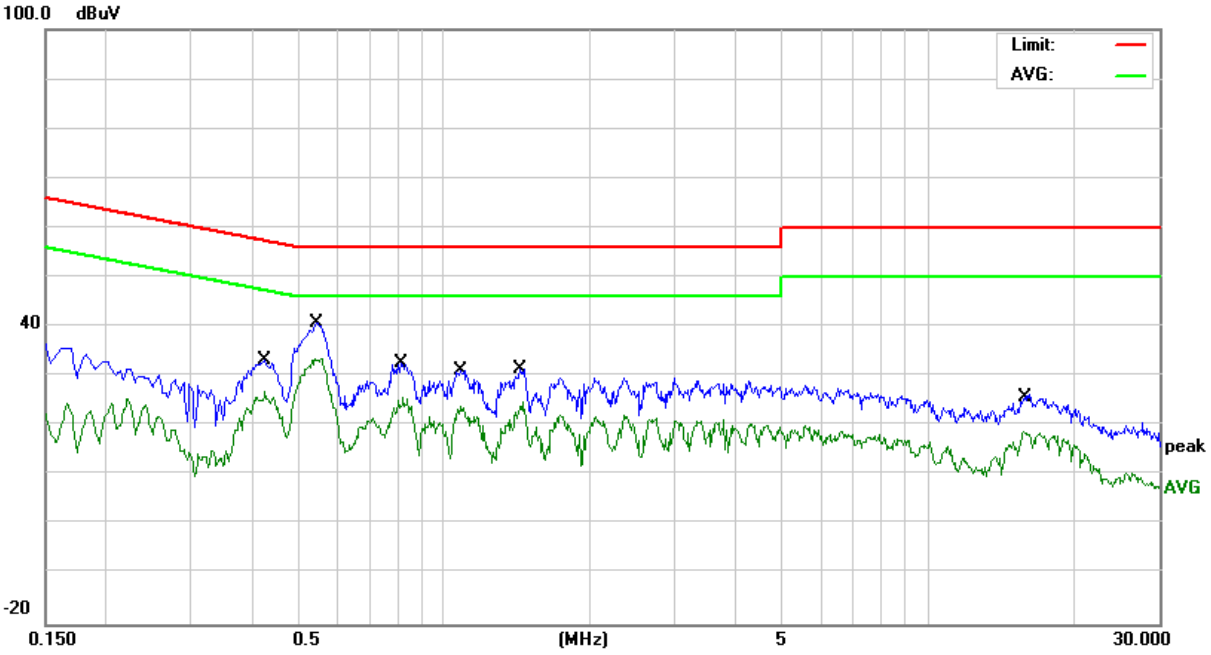

7.2 RADIATED SPURIOUS EMISSION

7.2.1 Applicable Standard

According to FCC Part 15.247(d) and 15.209 and ANSI C63.10-2013

7.2.2 Conformance Limit

According to FCC Part 15.247(d): radiated emissions which fall in the restricted bands, as defined in §15.205(a), must also comply with the radiated emission limits specified in §15.209(a) (see §15.205(c)).
According to FCC Part15.205, Restricted bands

MHz	MHz	MHz	GHz
0.090-0.110	16.42-16.423	399.9-410	4.5-5.15
0.495-0.505	16.69475-16.69525	608-614	5.35-5.46
2.1735-2.1905	16.80425-16.80475	960-1240	7.25-7.75
4.125-4.128	25.5-25.67	1300-1427	8.025-8.5
4.17725-4.17775	37.5-38.25	1435-1626.5	9.0-9.2
4.20725-4.20775	73-74.6	1645.5-1646.5	9.3-9.5
6.215-6.218	74.8-75.2	1660-1710	10.6-12.7
6.26775-6.26825	123-138	2200-2300	14.47-14.5
8.291-8.294	149.9-150.05	2310-2390	15.35-16.2
8.362-8.366	156.52475-156.52525	2483.5-2500	17.7-21.4
8.37625-8.38675	156.7-156.9	2690-2900	22.01-23.12
8.41425-8.41475	162.0125-167.17	3260-3267	23.6-24.0
12.29-12.293	167.72-173.2	3332-3339	31.2-31.8
12.51975-12.52025	240-285	3345.8-3358	36.43-36.5
12.57675-12.57725	322-335.4	3600-4400	(2)
13.36-13.41			

20dBc in any 100 kHz bandwidth outside the operating frequency band. In case the emission fall within the restricted band specified on 15.205(a), then the 15.209(a) limit in the table below has to be followed.

Restricted Frequency(MHz)	Field Strength (μV/m)	Field Strength (dBμV/m)	Measurement Distance
0.009~0.490	2400/F(KHz)	20 log (uV/m)	300
0.490~1.705	24000/F(KHz)	20 log (uV/m)	30
1.705~30.0	30	29.5	30
30-88	100	40	3
88-216	150	43.5	3
216-960	200	46	3
Above 960	500	54	3

Limits of Radiated Emission Measurement(Above 1000MHz)

Frequency(MHz)	Class B (dBuV/m) (at 3M)	
	PEAK	AVERAGE
Above 1000	74	54

Remark :1. Emission level in dBuV/m=20 log (uV/m)
2. Measurement was performed at an antenna to the closed point of EUT distance of meters.
3. For Frequency 9kHz~30MHz:
Distance extrapolation factor =40log(Specific distance/ test distance)(dB);
Limit line=Specific limits(dBuV) + distance extrapolation factor.
For Frequency above 30MHz:
Distance extrapolation factor =20log(Specific distance/ test distance)(dB);
Limit line=Specific limits(dBuV) + distance extrapolation factor.

7.2.3 Measuring Instruments

The Measuring equipment is listed in the section 6.3 of this test report.

7.2.4 Test Configuration

(a) For radiated emissions below 30MHz

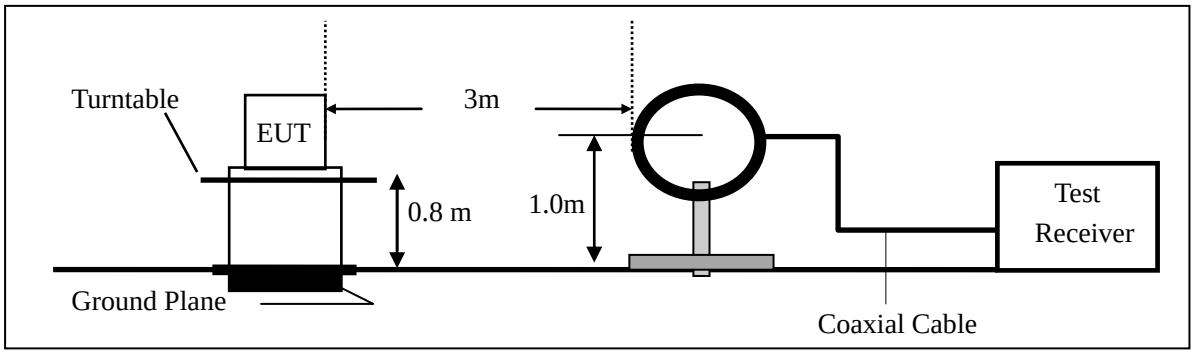

(b) For radiated emissions from 30MHz to 1000MHz

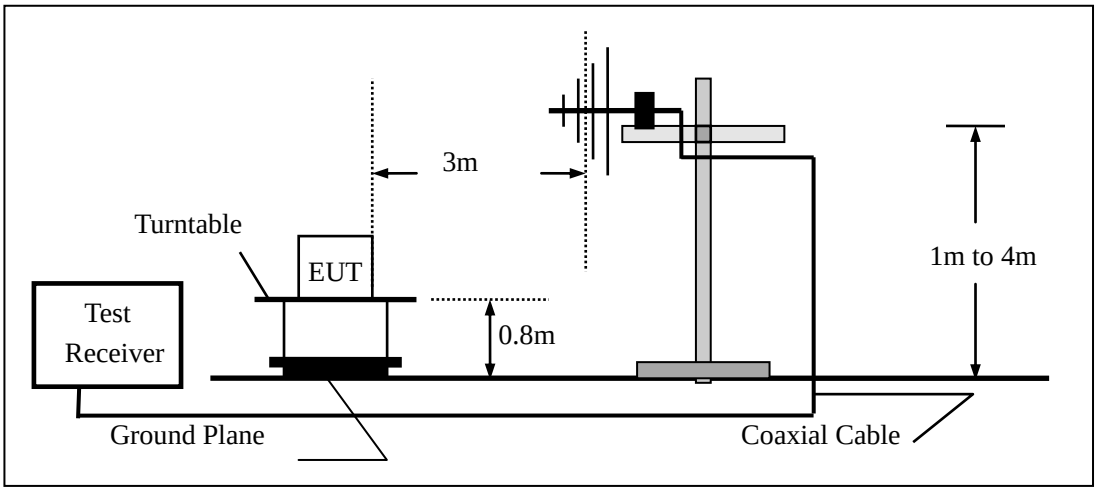

(c) For radiated emissions above 1000MHz

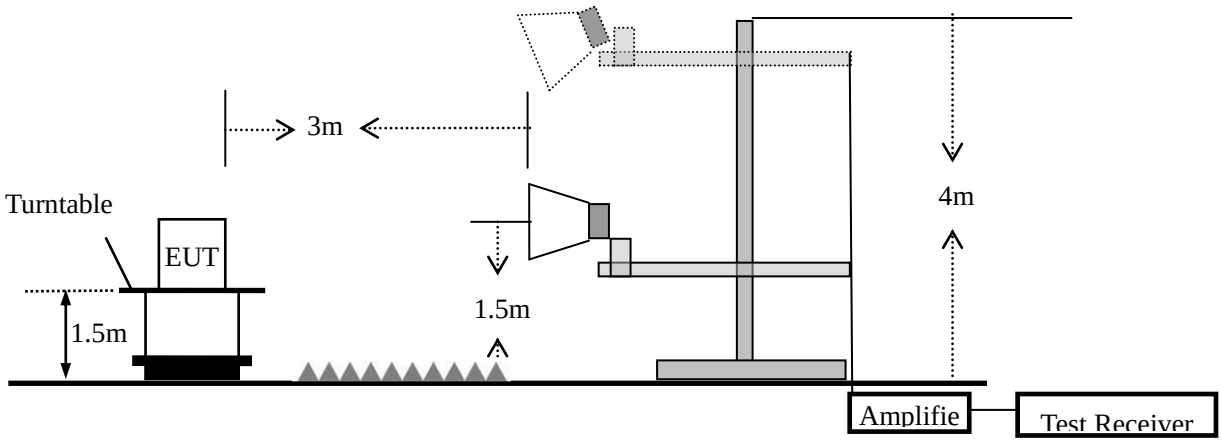

7.2.5 Test Procedure

The test site semi-anechoic chamber has met the requirement of NSA tolerance 4 dB according to the standards: ANSI C63.10-2013. The test distance is 3m.The setup is according to the requirements in Section 13.1.4.1 of ANSI C63.10-2013 and CAN/CSA-CEI/IEC CISPR 22.
This test is required for any spurious emission that falls in a Restricted Band, as defined in Section 15.205. It must be performed with the highest gain of each type of antenna proposed for use with the EUT.
Use the following spectrum analyzer settings:

Spectrum Parameter	Setting
Attenuation	Auto
Start Frequency	1000 MHz
Stop Frequency	10th carrier harmonic
RB / VB (emission in restricted band)	1 MHz / 1 MHz for Peak, 1 MHz / 10Hz for Average

Receiver Parameter	Setting
Attenuation	Auto
Start ~ Stop Frequency	9kHz~150kHz / RB 200Hz for QP
Start ~ Stop Frequency	150kHz~30MHz / RB 9kHz for QP
Start ~ Stop Frequency	30MHz~1000MHz / RB 120kHz for QP

a. The measuring distance of at 3 m shall be used for measurements at frequency up to 1GHz. For frequencies above 1GHz, any suitable measuring distance may be used.
b. The EUT was placed on the top of a rotating table 0.8 m for below 1GHz and 1.5m for above 1GHz the ground at a 3 meter. The table was rotated 360 degrees to determine the position of the highest radiation.
c. The height of the equipment or of the substitution antenna shall be 0.8 m for below 1GHz and 1.5m for above 1GHz; the height of the test antenna shall vary between 1 m to 4 m. Both horizontal and vertical polarizations of the antenna are set to make the measurement.
d. For the radiated emission test above 1GHz:
Place the measurement antenna away from each area of the EUT determined to be a source of emissions at the specified measurement distance, while keeping the measurement antenna aimed at the source of emissions at each frequency of significant emissions, with polarization oriented for maximum response. The measurement antenna may have to be higher or lower than the EUT, depending on the radiation pattern of the emission and staying aimed at the emission source for receiving the maximum signal. The final measurement antenna elevation shall be that which maximizes the emissions. The measurement antenna elevation for maximum emissions shall be restricted to a range of heights of from 1 m to 4 m above the ground or reference ground plane.
e. The initial step in collecting conducted emission data is a spectrum analyzer peak detector mode pre-scanning the measurement frequency range. Significant peaks are then marked and then Quasi Peak detector mode re-measured.
f. If the Peak Mode measured value compliance with and lower than Quasi Peak Mode Limit, the EUT shall be deemed to meet QP Limits and then no additional QP Mode measurement performed.
g. For the actual test configuration, please refer to the related Item –EUT Test Photos.

Note:

Both horizontal and vertical antenna polarities were tested
and performed pretest to three orthogonal axis. The worst case emissions were reported

During the radiated emission test, the Spectrum Analyzer was set with the following configurations:

Frequency Band (MHz)	Function	Resolution bandwidth	Video Bandwidth
30 to 1000	QP	120 kHz	300 kHz
Above 1000	Peak	1 MHz	1 MHz
	Average	1 MHz	10 Hz

Note: for the frequency ranges below 30 MHz, a narrower RBW is used for these ranges but the measured value should add a RBW correction factor (RBWCF) where RBWCF [dB] =10*lg(100 [kHz]/narrower RBW [kHz]). , the narrower RBW is 1 kHz and RBWCF is 20 dB for the frequency 9 kHz to 150 kHz, and the narrower RBW is 10 kHz and RBWCF is 10 dB for the frequency 150 kHz to 30 MHz.

7.2.6 Test Results

■ Spurious Emission below 30MHz (9KHz to 30MHz)

EUT:	InkPad 3 Pro	Model No.:	PB740-2
Temperature:	20 ℃	Relative Humidity:	48%
Test Mode:	Mode2/Mode3/Mode4	Test By:	Jerry Xie

Freq. (MHz)	Ant.Pol. H/V	Emission Level(dBuV/m)		Limit 3m(dBuV/m)		Over(dB)	
		PK	AV	PK	AV	PK	AV
--	--	--	--	--	--	--	--

Note: the amplitude of spurious emission that is attenuated by more than 20dB below the permissible limit has no need to be reported.

■ Spurious Emission below 1GHz (30MHz to 1GHz)
All the modulation modes have been tested, and the worst result was report as below:

EUT:	InkPad 3 Pro	Model Name :	PB740-2
Temperature:	20 ℃	Relative Humidity:	48%
Pressure:	1010hPa	Test Mode:	Mode 1
Test Voltage :	DC 3.7V		

Polar (H/V)	Frequency (MHz)	Meter Reading (dBuV)	Factor (dB)	Emission Level (dBuV/m)	Limits (dBuV/m)	Margin (dB)	Remark
V	30.5305	5.83	18.39	24.22	40.00	-15.78	QP
V	40.8445	13.21	13.42	26.63	40.00	-13.37	QP
V	47.3253	18.59	10.86	29.45	40.00	-10.55	QP
V	54.2610	21.40	7.07	28.47	40.00	-11.53	QP
V	59.2325	21.18	6.09	27.27	40.00	-12.73	QP
V	79.2425	20.93	7.93	28.86	40.00	-11.14	QP

Remark:
Absolute Level= ReadingLevel+ Factor, Margin= Absolute Level - Limit

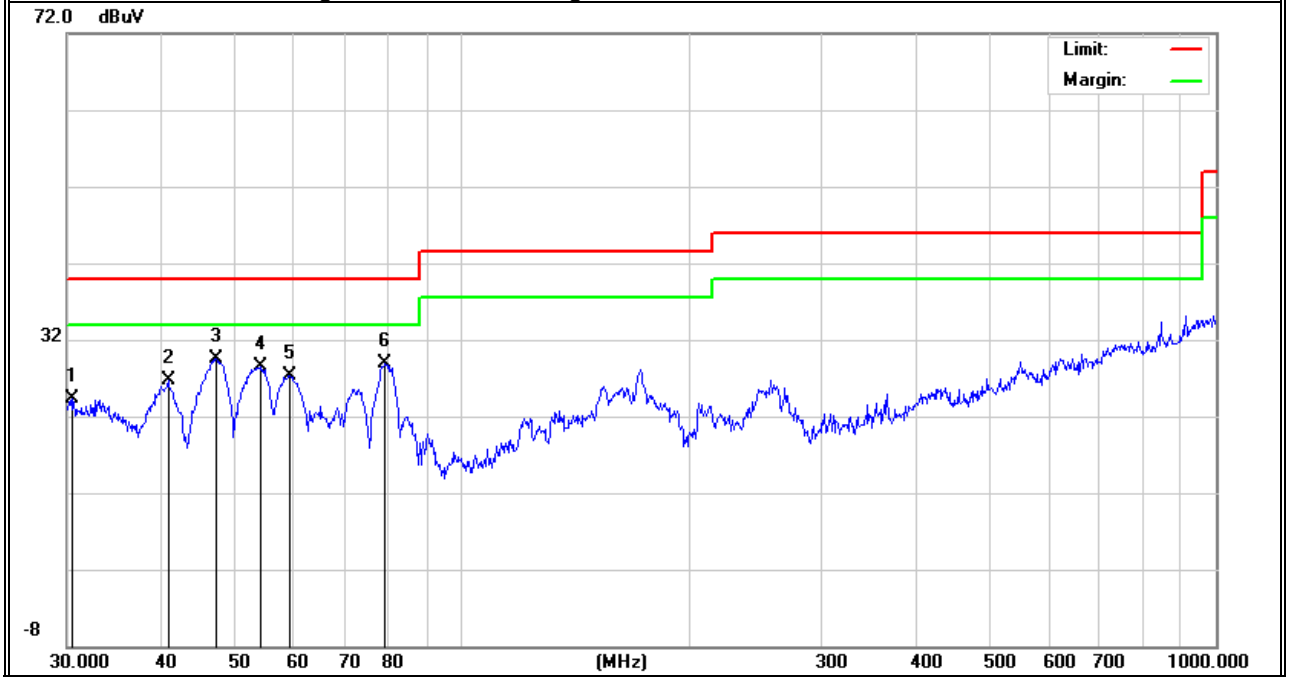

Polar (H/V)	Frequency (MHz)	Meter Reading (dBuV)	Factor (dB)	Emission Level (dBuV/m)	Limits (dBuV/m)	Margin (dB)	Remark
H	30.1053	7.21	18.55	25.76	40.00	-14.24	QP
H	53.3179	8.23	7.29	15.52	40.00	-24.48	QP
H	78.4133	12.48	7.75	20.23	40.00	-19.77	QP
H	151.0665	11.66	11.75	23.41	43.50	-20.09	QP
H	260.1444	12.05	14.97	27.02	46.00	-18.98	QP
H	429.5228	11.37	18.25	29.62	46.00	-16.38	QP

Remark:
Absolute Level= ReadingLevel+ Factor, Margin= Absolute Level - Limit

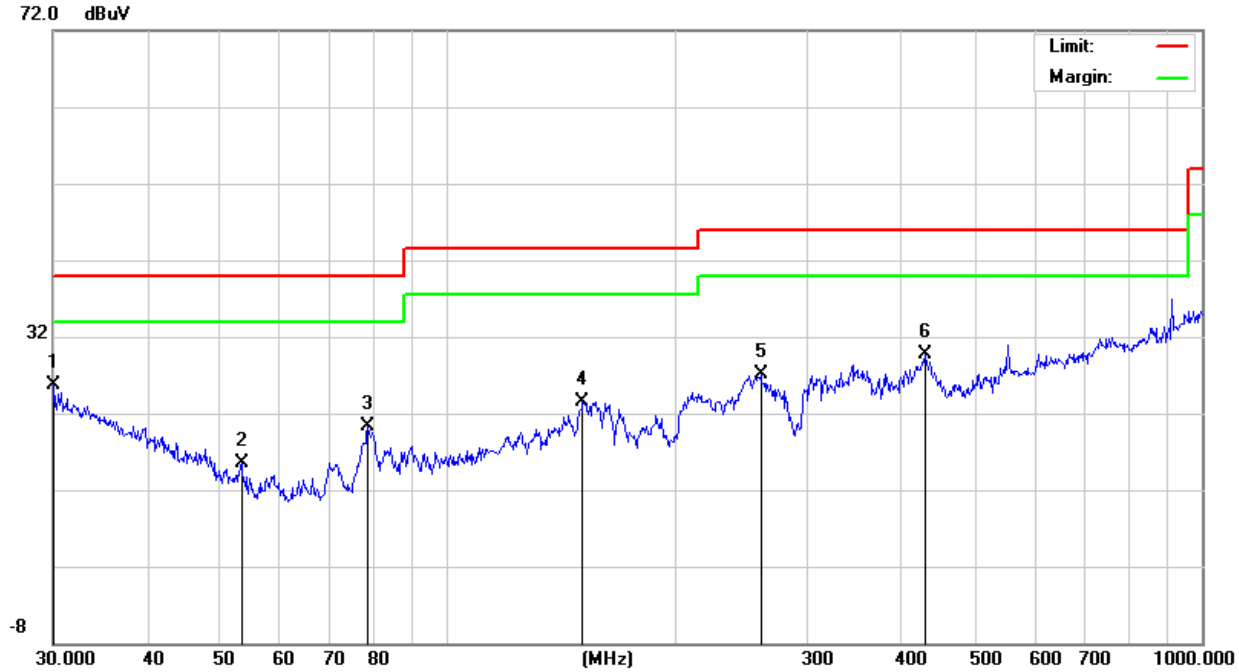

■ Spurious Emission Above 1GHz (1GHz to 25GHz)

EUT:	InkPad 3 Pro	Model No.:	PB740-2
Temperature:	20 ℃	Relative Humidity:	48%
Test Mode:	Mode2/Mode3/Mode4	Test By:	Jerry Xie

All the modulation modes have been tested, and the worst result was report as below:

Frequency	Read Level	Cable loss	Antenna Factor	Preamp Factor	Emission Level	Limits	Margin	Remark	Comment
(MHz)	(dBμV)	(dB)	dB/m	(dB)	(dBμV/m)	(dBμV/m)	(dB)		
Low Channel (2402 MHz)(GFSK)--Above 1G									
4804.443	62.97	5.21	35.59	44.30	59.47	74.00	-14.53	Pk	Vertical
4804.443	44.42	5.21	35.59	44.30	40.92	54.00	-13.08	AV	Vertical
7206.175	60.70	6.48	36.27	44.60	58.85	74.00	-15.15	Pk	Vertical
7206.175	44.04	6.48	36.27	44.60	42.19	54.00	-11.81	AV	Vertical
4804.156	62.82	5.21	35.55	44.30	59.28	74.00	-14.72	Pk	Horizontal
4804.156	45.37	5.21	35.55	44.30	41.83	54.00	-12.17	AV	Horizontal
7206.743	57.62	6.48	36.27	44.52	55.85	74.00	-18.15	Pk	Horizontal
7206.743	40.45	6.48	36.27	44.52	38.68	54.00	-15.32	AV	Horizontal
Mid Channel (2441 MHz)(GFSK)--Above 1G									
4882.545	61.28	5.21	35.66	44.20	57.95	74.00	-16.05	Pk	Vertical
4882.545	39.49	5.21	35.66	44.20	36.16	54.00	-17.84	AV	Vertical
7323.766	58.85	7.10	36.50	44.43	58.02	74.00	-15.98	Pk	Vertical
7323.766	44.53	7.10	36.50	44.43	43.70	54.00	-10.30	AV	Vertical
4882.68	60.19	5.21	35.66	44.20	56.86	74.00	-17.14	Pk	Horizontal
4882.68	47.85	5.21	35.66	44.20	44.52	54.00	-9.48	AV	Horizontal
7323.356	55.07	7.10	36.50	44.43	54.24	74.00	-19.76	Pk	Horizontal
7323.356	45.20	7.10	36.50	44.43	44.37	54.00	-9.63	AV	Horizontal
High Channel (2480 MHz)(GFSK)-- Above 1G									
4959.575	62.20	5.21	35.52	44.21	58.72	74.00	-15.28	Pk	Vertical
4959.575	40.43	5.21	35.52	44.21	36.95	54.00	-17.05	AV	Vertical
7439.153	62.89	7.10	36.53	44.60	61.92	74.00	-12.08	Pk	Vertical
7439.153	44.84	7.10	36.53	44.60	43.87	54.00	-10.13	AV	Vertical
4959.4	64.27	5.21	35.52	44.21	60.79	74.00	-13.21	Pk	Horizontal
4959.4	46.56	5.21	35.52	44.21	43.08	54.00	-10.92	AV	Horizontal
7439.397	61.18	7.10	36.53	44.60	60.21	74.00	-13.79	Pk	Horizontal
7439.397	43.69	7.10	36.53	44.60	42.72	54.00	-11.28	AV	Horizontal

Note:

(1) Emission Level= Antenna Factor + Cable Loss + Read Level - Preamp Factor
(2)All other emissions more than 20dB below the limit.

■ Spurious Emission in Restricted Band 2310-2390MHz and 2483.5-2500MHz

EUT:	InkPad 3 Pro	Model No.:	PB740-2
Temperature:	20 ℃	Relative Humidity:	48%
Test Mode:	Mode2/ Mode4	Test By:	Jerry Xie

All the modulation modes have been tested, and the worst result was report as below:

Frequency (MHz)	Meter Reading (dBμV)	Cable Loss (dB)	Antenna Factor dB/m	Preamp Factor (dB)	Emission Level (dBμV/m)	Limits (dBμV/m)	Margin (dB)	Detector Type	Comment
1Mbps (GFSK)-hopping									
2310.00	63.72	2.97	27.80	43.80	50.69	74	-23.31	Pk	Horizontal
2310.00	44.72	2.97	27.80	43.80	31.69	54	-22.31	AV	Horizontal
2310.00	63.40	2.97	27.80	43.80	50.37	74	-23.63	Pk	Vertical
2310.00	47.29	2.97	27.80	43.80	34.26	54	-19.74	AV	Vertical
2390.00	59.88	3.14	27.21	43.80	46.43	74	-27.57	Pk	Vertical
2390.00	43.07	3.14	27.21	43.80	29.62	54	-24.38	AV	Vertical
2390.00	57.56	3.14	27.21	43.80	44.11	74	-29.89	Pk	Horizontal
2390.00	46.91	3.14	27.21	43.80	33.46	54	-20.54	AV	Horizontal
2483.50	58.33	3.58	27.70	44.00	45.61	74	-28.39	Pk	Vertical
2483.50	41.79	3.58	27.70	44.00	29.07	54	-24.93	AV	Vertical
2483.50	59.20	3.58	27.70	44.00	46.48	74	-27.52	Pk	Horizontal
2483.50	44.41	3.58	27.70	44.00	31.69	54	-22.31	AV	Horizontal
1Mbps(GFSK)- Non-hopping									
2310.00	60.57	2.97	27.80	43.80	47.54	74	-26.46	Pk	Horizontal
2310.00	50.80	2.97	27.80	43.80	37.77	54	-16.23	AV	Horizontal
2310.00	67.78	2.97	27.80	43.80	54.75	74	-19.25	Pk	Vertical
2310.00	41.09	2.97	27.80	43.80	28.06	54	-25.94	AV	Vertical
2390.00	59.67	3.14	27.21	43.80	46.22	74	-27.78	Pk	Vertical
2390.00	52.21	3.14	27.21	43.80	38.76	54	-15.24	AV	Vertical
2390.00	64.13	3.14	27.21	43.80	50.68	74	-23.32	Pk	Horizontal
2390.00	50.57	3.14	27.21	43.80	37.12	54	-16.88	AV	Horizontal
2483.50	61.45	3.58	27.70	44.00	48.73	74	-25.27	Pk	Vertical
2483.50	41.32	3.58	27.70	44.00	28.60	54	-25.40	AV	Vertical
2483.50	64.90	3.58	27.70	44.00	52.18	74	-21.82	Pk	Horizontal
2483.50	42.89	3.58	27.70	44.00	30.17	54	-23.83	AV	Horizontal

Note: (1) All other emissions more than 20dB below the limit.

■ Spurious Emission in Restricted Band 3260MHz-18000MHz

EUT:	InkPad 3 Pro	Model No.:	PB740-2
Temperature:	20 ℃	Relative Humidity:	48%
Test Mode:	Mode2/ Mode4	Test By:	Jerry Xie

All the modulation modes have been tested, and the worst result was report as below:

Frequency	Reading Level	Cable Loss	Antenna	Preamp Factor	Emission Level	Limits	Margin	Detector	Comment
(MHz)	(dBμV)	(dB)	dB/m	(dB)	(dBμV/m)	(dBμV/m)	(dB)	Type	
3260	66.69	4.04	29.57	44.70	55.60	74	-18.40	Pk	Vertical
3260	52.45	4.04	29.57	44.70	41.36	54	-12.64	AV	Vertical
3260	62.95	4.04	29.57	44.70	51.86	74	-22.14	Pk	Horizontal
3260	54.87	4.04	29.57	44.70	43.78	54	-10.22	AV	Horizontal
3332	61.93	4.26	29.87	44.40	51.66	74	-22.34	Pk	Vertical
3332	52.66	4.26	29.87	44.40	42.39	54	-11.61	AV	Vertical
3332	69.59	4.26	29.87	44.40	59.32	74	-14.68	Pk	Horizontal
3332	54.55	4.26	29.87	44.40	44.28	54	-9.72	AV	Horizontal
17797	48.34	10.99	43.95	43.50	59.78	74	-14.22	Pk	Vertical
17797	33.85	10.99	43.95	43.50	45.29	54	-8.71	AV	Vertical
17788	42.92	11.81	43.69	44.60	53.82	74	-20.18	Pk	Horizontal
17788	35.69	11.81	43.69	44.60	46.59	54	-7.41	AV	Horizontal

Note: (1) All other emissions more than 20dB below the limit.

7.3 NUMBER OF HOPPING CHANNEL

7.3.1 Applicable Standard

According to FCC Part 15.247(a)(1) (iii)and ANSI C63.10-2013

7.3.2 Conformance Limit

Frequency hopping systems in the 2400-2483.5MHz band shall use at least 15 channels.

7.3.3 Measuring Instruments

The Measuring equipment is listed in the section 6.3 of this test report.

7.3.4 Test Setup

Please refer to Section 6.1 of this test report.

7.3.5 Test Procedure

The testing follows ANSI C63.10-2013 clause 7.8.3
The RF output of EUT was connected to the spectrum analyzer by RF cable and attenuator.
The path loss was compensated to the results for each measurement.
Set to the maximum power setting and enable the EUT transmit continuously.
The EUT must have its hopping function enabled.
Use the following spectrum analyzer settings:
Span = the frequency band of operation
RBW : To identify clearly the individual channels, set the RBW to less than 30% of the channel spacing or the 20 dB bandwidth, whichever is smaller.
VBW ≥ RBW
Sweep = auto
Detector function = peak
Trace = max hold

7.3.6 Test Results

EUT:	InkPad 3 Pro	Model No.:	PB740-2
Temperature:	20 ℃	Relative Humidity:	48%
Test Mode:	Mode 5(1Mbps)	Test By:	Jerry Xie

Test data reference attachment.

7.4 HOPPING CHANNEL SEPARATION MEASUREMENT

7.4.1 Applicable Standard

According to FCC Part 15.247(a)(1) and ANSI C63.10-2013

7.4.2 Conformance Limit

Frequency hopping systems shall have hopping channel carrier frequencies separated by a minimum of 25 kHz or the 20 dB bandwidth of the hopping channel, whichever is greater. Alternatively, frequency hopping systems operating in the 2400-2483.5MHz band shall have hopping channel carrier frequencies that are separated by 25kHz or two-thirds of the 20dB bandwidth of the hopping channel, whichever is greater.

7.4.3 Measuring Instruments

The Measuring equipment is listed in the section 6.3 of this test report.

7.4.4 Test Setup

Please refer to Section 6.1 of this test report.

7.4.5 Test Procedure

The testing follows ANSI C63.10-2013 clause 7.8.2
The RF output of EUT was connected to the spectrum analyzer by RF cable and attenuator.
The path loss was compensated to the results for each measurement.
Set to the maximum power setting and enable the EUT transmit continuously.
The EUT was operating in controlled its channel.
Use the following spectrum analyzer settings:
Span = Measurement Bandwidth or Channel Separation
RBW: Start with the RBW set to approximately 3% of the channel spacing; adjust as necessary to best identify the center of each individual channel.
VBW ≥ RBW
Sweep = auto
Detector function = peak
Trace = max hold

7.4.6 Test Results

EUT:	InkPad 3 Pro	Model No.:	PB740-2
Temperature:	20 ℃	Relative Humidity:	48%
Test Mode:	Mode2/Mode3/Mode4	Test By:	Jerry Xie

Test data reference attachment.

7.5 AVERAGE TIME OF OCCUPANCY (DWELL TIME)

7.5.1 Applicable Standard

According to FCC Part 15.247(a)(1)(iii) and ANSI C63.10-2013

7.5.2 Conformance Limit

The average time of occupancy on any channel shall not be greater than 0.4s within a period of 0.4s multiplied by the number of hopping channels employed.

7.5.3 Measuring Instruments

The Measuring equipment is listed in the section 6.3 of this test report.

7.5.4 Test Setup

Please refer to Section 6.1 of this test report.

7.5.5 Test Procedure

The testing follows ANSI C63.10-2013 clause 7.8.4
The RF output of EUT was connected to the spectrum analyzer by RF cable and attenuator.
The path loss was compensated to the results for each measurement.
Set to the maximum power setting and enable the EUT transmit continuously.
The EUT must have its hopping function enabled.
Use the following spectrum analyzer settings:
Span = zero span, centered on a hopping channel
RBW ≥ 1MHz
VBW ≥ RBW
Sweep = as necessary to capture the entire dwell time per hopping channel
Detector function = peak
Trace = max hold
Measure the maximum time duration of one single pulse.
Set the EUT for DH5, DH3 and DH1 packet transmitting.
Measure the maximum time duration of one single pulse.

7.5.6 Test Results

EUT:	InkPad 3 Pro	Model No.:	PB740-2
Temperature:	20 ℃	Relative Humidity:	48%
Test Mode:	Mode2/Mode3/Mode4	Test By:	Jerry Xie

Test data reference attachment.
Note:
A Period Time = (channel number)*0.4
DH1 Dwell time: Reading * (1600/2)*31.6/(channel number)
DH3 Dwell time: Reading * (1600/4)*31.6/(channel number)
DH5 Dwell time: Reading * (1600/6)*31.6/(channel number)

For Example:

1. In normal mode, hopping rate is 1600 hops/s with 6 slots in 79 hopping channels. With channel hopping rate (1600 / 6 / 79) in Occupancy Time Limit (0.4 x 79) (s), Hops Over Occupancy Time comes to (1600 / 6 / 79) x (0.4 x 79) = 106.67 hops.

2. In AFH mode, hopping rate is 800 hops/s with 6 slots in 20 hopping channels. With channel hopping rate (800 / 6 / 20) in Occupancy Time Limit (0.4 x 20) (s), Hops Over Occupancy Time comes to (800 / 6 / 20) x (0.4 x 20) = 53.33 hops.

3. Dwell Time(s) = Hops Over Occupancy Time (hops) x Package Transfer Time

7.6 20DB BANDWIDTH TEST

7.6.1 Applicable Standard

According to FCC Part 15.247(a)(1) and ANSI C63.10-2013

7.6.2 Conformance Limit

No limit requirement.

7.6.3 Measuring Instruments

The Measuring equipment is listed in the section 6.3 of this test report.

7.6.4 Test Setup

Please refer to Section 6.1 of this test report.

7.6.5 Test Procedure

The testing follows ANSI C63.10-2013 clause 6.9.2
The RF output of EUT was connected to the spectrum analyzer by RF cable and attenuator.
The path loss was compensated to the results for each measurement.
Set to the maximum power setting and enable the EUT transmit continuously.
The EUT was operating in controlled its channel.
Use the following spectrum analyzer settings:
Span = approximately 2 to 3 times the 20 dB bandwidth, centered on a hopping channel
RBW ≥ 1% of the 20 dB bandwidth
VBW ≥ RBW
Sweep = auto
Detector function = peak
Trace = max hold

7.6.6 Test Results

EUT:	InkPad 3 Pro	Model No.:	PB740-2
Temperature:	20 ℃	Relative Humidity:	48%
Test Mode:	Mode2/Mode3/Mode4	Test By:	Jerry Xie

Test data reference attachment.

7.7 PEAK OUTPUT POWER

7.7.1 Applicable Standard

According to FCC Part 15.247(b)(1) and ANSI C63.10-2013

7.7.2 Conformance Limit

The maximum peak conducted output power of the intentional radiator shall not exceed the following: (1) For frequency hopping systems operating in the 2400-2483.5 MHz band employing at least 75 non-overlapping hopping channels, and all frequency hopping systems in the 5725-5850 MHz band: 1 watt. For all other frequency hopping systems in the 2400-2483.5 MHz band 0.125 watts.

7.7.3 Measuring Instruments

The Measuring equipment is listed in the section 6.3 of this test report.

7.7.4 Test Setup

Please refer to Section 6.1 of this test report.

7.7.5 Test Procedure

The testing follows ANSI C63.10-2013 clause 7.8.5.
The RF output of EUT was connected to the spectrum analyzer by RF cable and attenuator.
The path loss was compensated to the results for each measurement.
Set to the maximum power setting and enable the EUT transmit continuously.
The EUT was operating in controlled its channel.
Use the following spectrum analyzer settings:
Span = approximately 5 times the 20 dB bandwidth, centered on a hopping channel
RBW ≥ the 20 dB bandwidth of the emission being measured
VBW ≥ RBW
Sweep = auto
Detector function = peak
Trace = max hold

7.7.6 Test Results

EUT:	InkPad 3 Pro	Model No.:	PB740-2
Temperature:	20 ℃	Relative Humidity:	48%
Test Mode:	Mode2/Mode3/Mode4	Test By:	Jerry Xie

Test data reference attachment.

7.8 CONDUCTED BAND EDGE MEASUREMENT

7.8.1 Applicable Standard

According to FCC Part 15.247(d) and ANSI C63.10-2013

7.8.2 Conformance Limit

In any 100 kHz bandwidth outside the frequency band in which the spread spectrum or digitally modulated intentional radiator is operating, the radio frequency power that is produced by the intentional radiator shall be at least 20 dB below that in the 100 kHz bandwidth within the band that contains the highest level of the desired power, based on either an RF conducted or a radiated measurement, provided the transmitter demonstrates compliance with the peak conducted power limits. If the transmitter complies with the conducted power limits based on the use of RMS averaging over a time interval, as permitted under paragraph (b)(3) of this section, the attenuation required under this paragraph shall be 30 dB instead of 20 dB. Attenuation below the general limits specified in §15.209(a) is not required. In addition, radiated emissions which fall in the restricted bands, as defined in §15.205(a), must also comply with the radiated emission limits specified in §15.209(a) (see §15.205(c)).

7.8.3 Measuring Instruments

The Measuring equipment is listed in the section 6.3 of this test report.

7.8.4 Test Setup

Please refer to Section 6.1 of this test report.

7.8.5 Test Procedure

The testing follows ANSI C63.10-2013 clause 7.8.6.
The RF output of EUT was connected to the spectrum analyzer by RF cable and attenuator.
The path loss was compensated to the results for each measurement.
Set to the maximum power setting and enable the EUT transmit continuously.
The EUT must have its hopping function enabled.
Use the following spectrum analyzer settings:
Span = approximately 5 times the 20 dB bandwidth, centered on a hopping channel
RBW = 100KHz
VBW = 300KHz
Band edge emissions must be at least 20 dB down from the highest emission level within the authorized band as measured with a 100kHz RBW. The attenuation shall be 30 dB instead of 20 dB when RMS conducted output power procedure is used.
Measure the highest amplitude appearing on spectral display and set it as a reference level. Plot the graph with marking the highest point and edge frequency.
Repeat above procedures until all measured frequencies were complete.

7.8.6 Test Results

EUT:	InkPad 3 Pro	Model No.:	PB740-2
Temperature:	20 ℃	Relative Humidity:	48%
Test Mode:	Mode2 /Mode4/ Mode 5	Test By:	Jerry Xie

Test data reference attachment.

7.9 SPURIOUS RF CONDUCTED EMISSION

7.9.1 Applicable Standard

According to FCC Part 15.247(d) and ANSI C63.10-2013.

7.9.2 Conformance Limit

In any 100 kHz bandwidth outside the frequency band in which the spread spectrum or digitally modulated intentional radiator is operating, the radio frequency power that is produced by the intentional radiator shall be at least 20 dB below that in the 100 kHz bandwidth within the band that contains the highest level of the desired power, based on either an RF conducted or a radiated measurement, provided the transmitter demonstrates compliance with the peak conducted power limits. If the transmitter complies with the conducted power limits based on the use of RMS averaging over a time interval, as permitted under paragraph (b)(3) of this section, the attenuation required under this paragraph shall be 30 dB instead of 20 dB. Attenuation below the general limits specified in §15.209(a) is not required. In addition, radiated emissions which fall in the restricted bands, as defined in §15.205(a), must also comply with the radiated emission limits specified in §15.209(a) (see §15.205(c)).

7.9.3 Measuring Instruments

The Measuring equipment is listed in the section 6.3 of this test report.

7.9.4 Test Setup

Please refer to Section 6.1 of this test report.

7.9.5 Test Procedure

Establish an emission level by using the following procedure:
a) Set the center frequency and span to encompass frequency range to be measured.
b) Set the RBW = 100 kHz.
c) Set the VBW ≥ [3 × RBW].
d) Detector = peak.
e) Sweep time = auto couple.
f) Trace mode = max hold.
g) Allow trace to fully stabilize.
h) Use the peak marker function to determine the maximum amplitude level.
Then the limit shall be attenuated by at least 20 dB relative to the maximum amplitude level in 100 kHz.

7.9.6 Test Results

Remark: The measurement frequency range is from 30MHz to the 10th harmonic of the fundamental frequency. The lowest, middle and highest channels are tested to verify the spurious emissions and bandege measurement data.

Test data reference attachment.

7.10 ANTENNA APPLICATION

7.10.1 Antenna Requirement

15.203 requirement: For intentional device, according to 15.203: an intentional radiator shall be designed to ensure that no antenna other than that furnished by the responsible party shall be used with the device.

7.10.2 Result

The EUT antenna is permanent attached Ceramic antenna (Gain: 2.5dBi). It comply with the standard requirement.

7.11 FREQUENCY HOPPING SYSTEM (FHSS) EQUIPMENT REQUIREMENTS

7.11.1 Standard Applicable

According to FCC Part 15.247(a)(1), The system shall hop to channel frequencies that are selected at the system hopping rate from a pseudo randomly ordered list of hopping frequencies. Each frequency must be used equally on the average by each transmitter. The system receivers shall have input bandwidths that match the hopping channel bandwidths of their corresponding transmitters and shall shift frequencies in synchronization with the transmitted signals. (g) Frequency hopping spread spectrum systems are not required to employ all available hopping channels during each transmission. However, the system, consisting of both the transmitter and the receiver, must be designed to comply with all of the regulations in this section should the transmitter be presented with a continuous data (or information) stream. In addition, a system employing short transmission bursts must comply with the definition of a frequency hopping system and must distribute its transmissions over the minimum number of hopping channels specified in this section. (h) The incorporation of intelligence within a frequency hopping spread spectrum system that permits the system to recognize other users within the spectrum band so that it individually and independently chooses and adapts its hopsets to avoid hopping on occupied channels is permitted. The coordination of frequency hopping systems in any other manner for the express purpose of avoiding the simultaneous occupancy of individual hopping frequencies by multiple transmitters is not permitted.

7.11.2 Frequency Hopping System

This transmitter device is frequency hopping device, and complies with FCC part 15.247 rule. This device uses Bluetooth radio which operates in 2400-2483.5 MHz band. Bluetooth uses a radio technology called frequency-hopping spread spectrum, which chops up the data being sent and transmits chunks of it on up to 79 bands (1 MHz each; centred from 2402 to 2480 MHz) in the range 2,400-2,483.5 MHz. The transmitter switches hop frequencies 1,600 times per second to assure a high degree of data security. All Bluetooth devices participating in a given piconet are synchronized to the frequency-hopping channel for the piconet. The frequency hopping sequence is determined by the master's device address and the phase of the hopping sequence (the frequency to hop at a specific time) is determined by the master's internal clock. Therefore, all slaves in a piconet must know the master's device address and must synchronize their clocks with the master's clock. Adaptive Frequency Hopping (AFH) was introduced in the Bluetooth specification to provide an effective way for a Bluetooth radio to counteract normal interference. AFH identifies "bad" channels, where either other wireless devices are interfering with the Bluetooth signal or the Bluetooth signal is interfering with another device. The AFH-enabled Bluetooth device will then communicate with other devices within its piconet to share details of any identified bad channels. The devices will then switch to alternative available "good" channels, away from the areas of interference, thus having no impact on the bandwidth used.

This device was tested with an bluetooth system receiver to check that the device maintained hopping synchronization, and the device complied with these requirements for FCC Part 15.247 rule.

7.11.3 EUT Pseudorandom Frequency Hopping Sequence

Pseudorandom Frequency Hopping Sequence Table as below: Channel: 08, 24, 40, 56, 40, 56, 72, 09, 01, 09, 33, 41, 33, 41, 65, 73, 53, 69, 06, 22, 04, 20, 36, 52, 38, 46, 70, 78, 68, 76, 21, 29, 10, 26, 42, 58, 44, 60, 76, 13, 03, 11, 35, 43, 37, 45, 69, 77, 55, 71, 08, 24, 08, 24, 40, 56, 40, 48, 72, 01, 72, 01, 25, 33, 12, 28, 44, 60, 42, 58, 74, 11, 05, 13, 37, 45 etc.

The system receiver have input bandwidths that match the hopping channel bandwidths of their corresponding transmitters and shift frequencies in synchronization with the transmitted signals.

8 TEST RESULTS

8.1 DWELL TIME

Condition	Mode	Frequency (MHz)	Pulse Time (ms)	Total Dwell Time (ms)	Period Time (ms)	Limit (ms)	Verdict
NVNT	1-DH1	2441	0.375	120	31600	400	Pass
NVNT	1-DH3	2441	1.63	260.8	31600	400	Pass
NVNT	1-DH5	2441	2.864	305.493	31600	400	Pass
NVNT	2-DH1	2441	0.382	122.24	31600	400	Pass
NVNT	2-DH3	2441	1.635	261.6	31600	400	Pass
NVNT	2-DH5	2441	2.88	307.2	31600	400	Pass
NVNT	3-DH1	2441	0.381	121.92	31600	400	Pass
NVNT	3-DH3	2441	1.63	260.8	31600	400	Pass
NVNT	3-DH5	2441	2.88	307.2	31600	400	Pass

Dwell NVNT 1-DH1 2441MHz

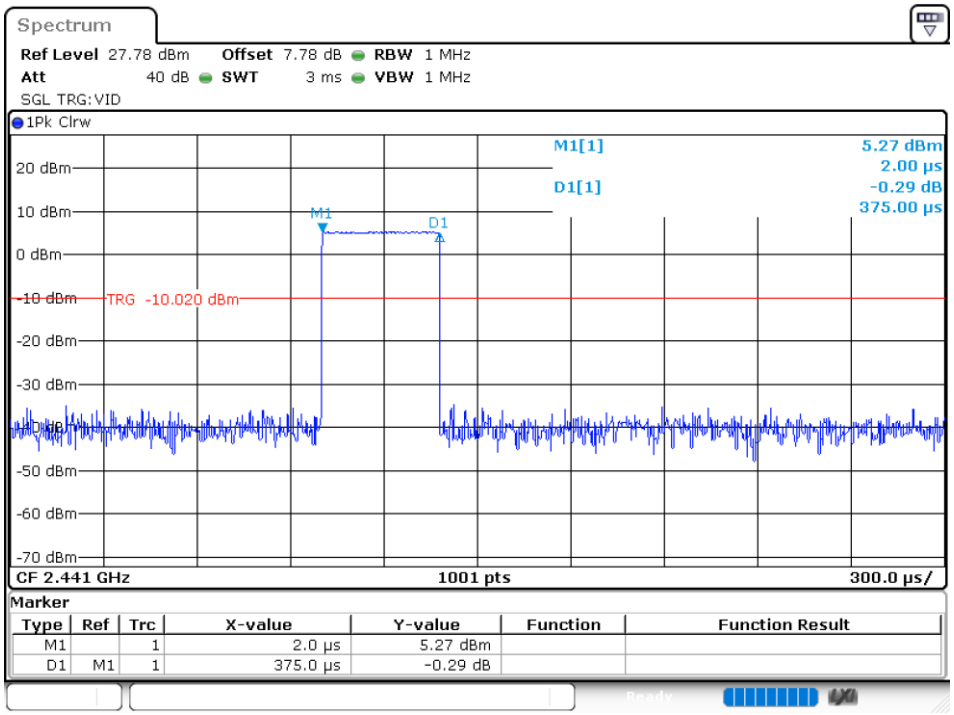

Dwell NVNT 1-DH3 2441MHz

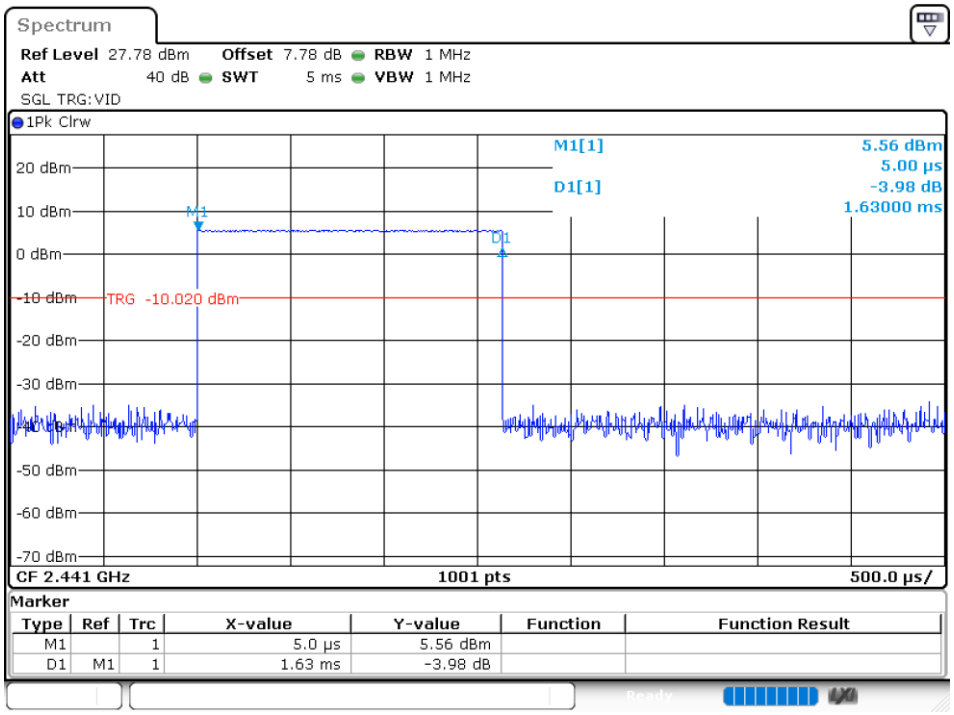

Dwell NVNT 1-DH5 2441MHz

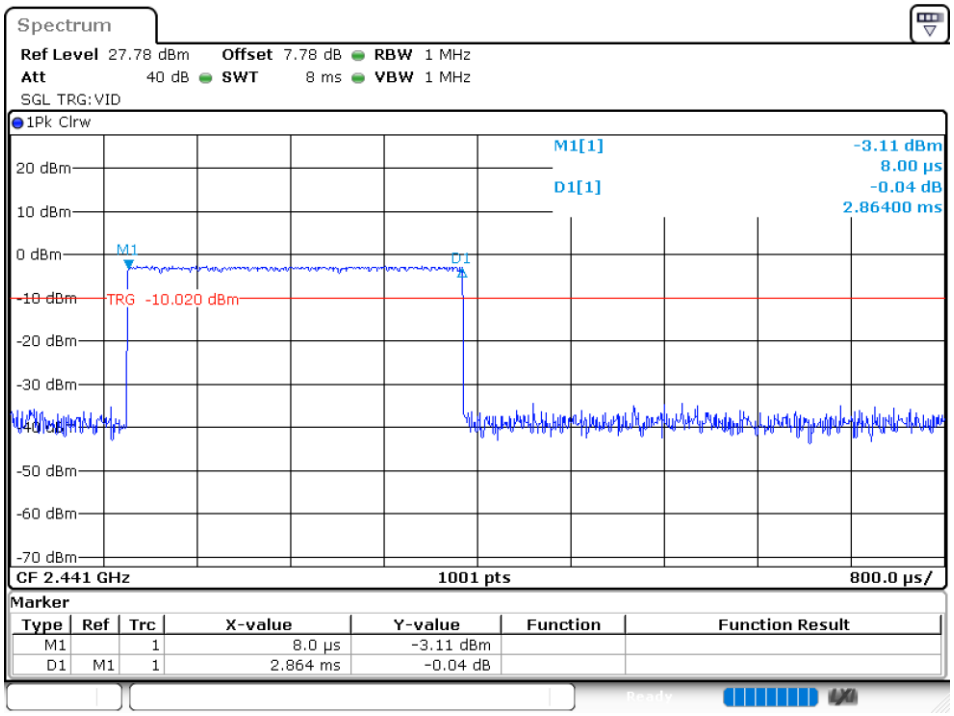

Dwell NVNT 2-DH1 2441MHz

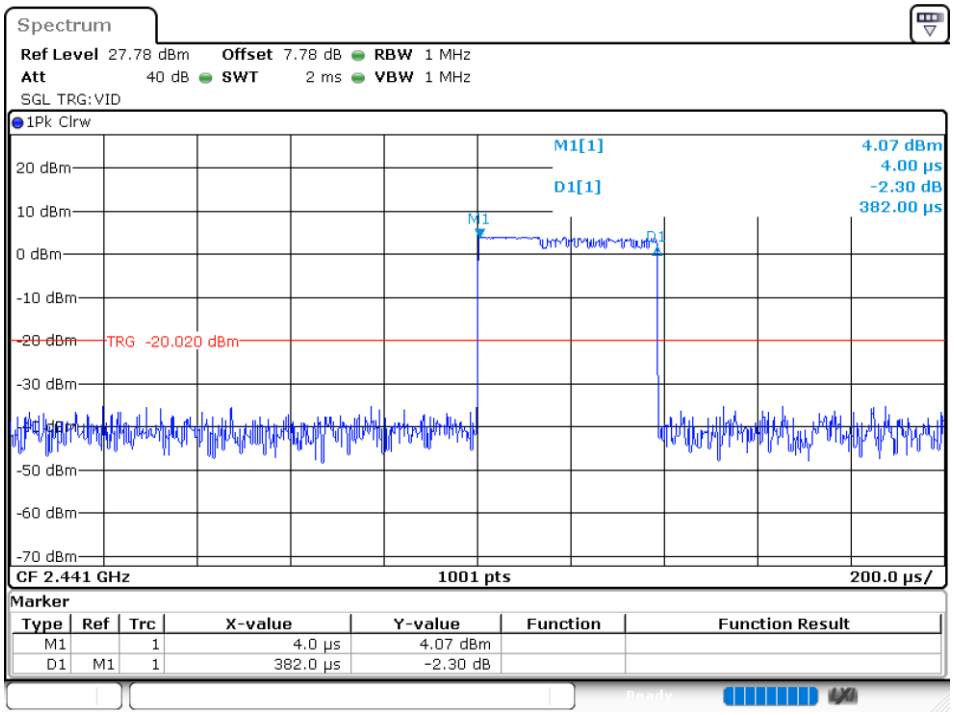

Dwell NVNT 2-DH3 2441MHz

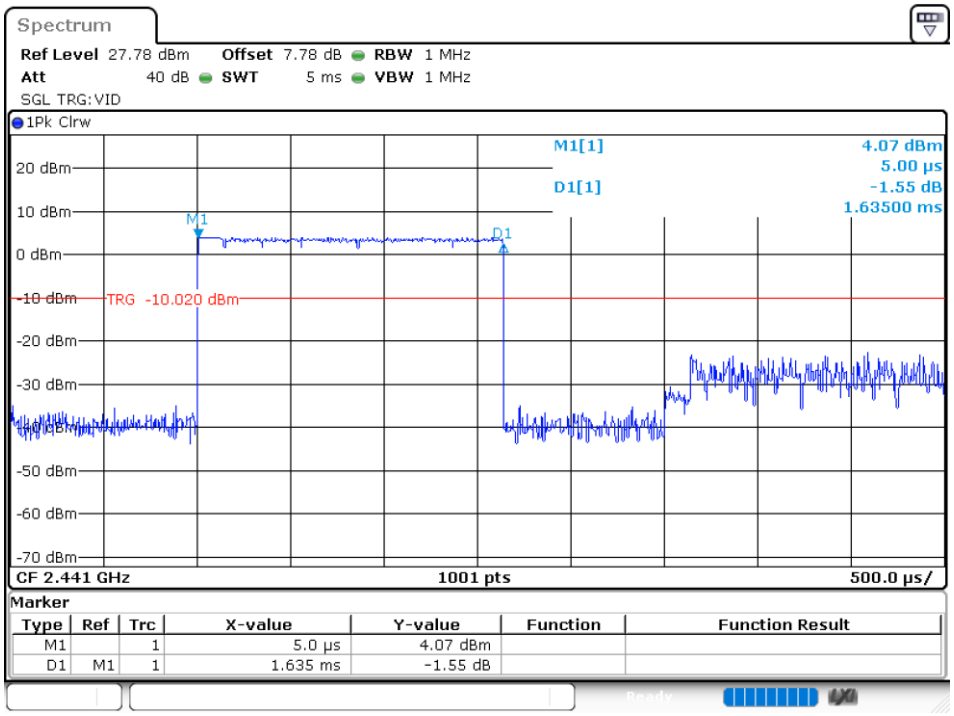

Dwell NVNT 2-DH5 2441MHz

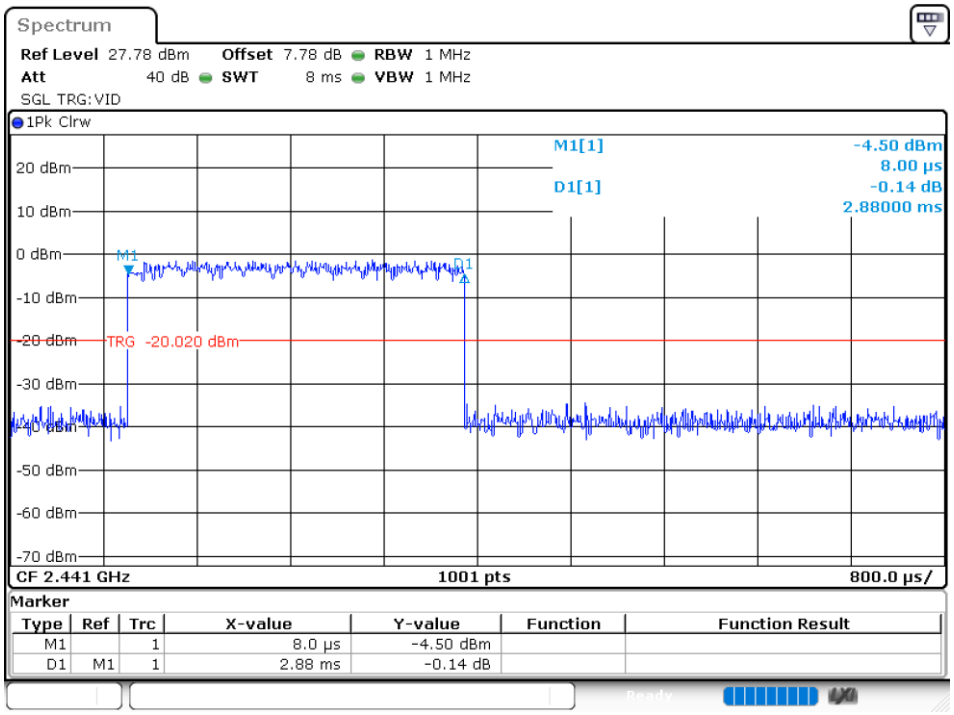

Dwell NVNT 3-DH1 2441MHz

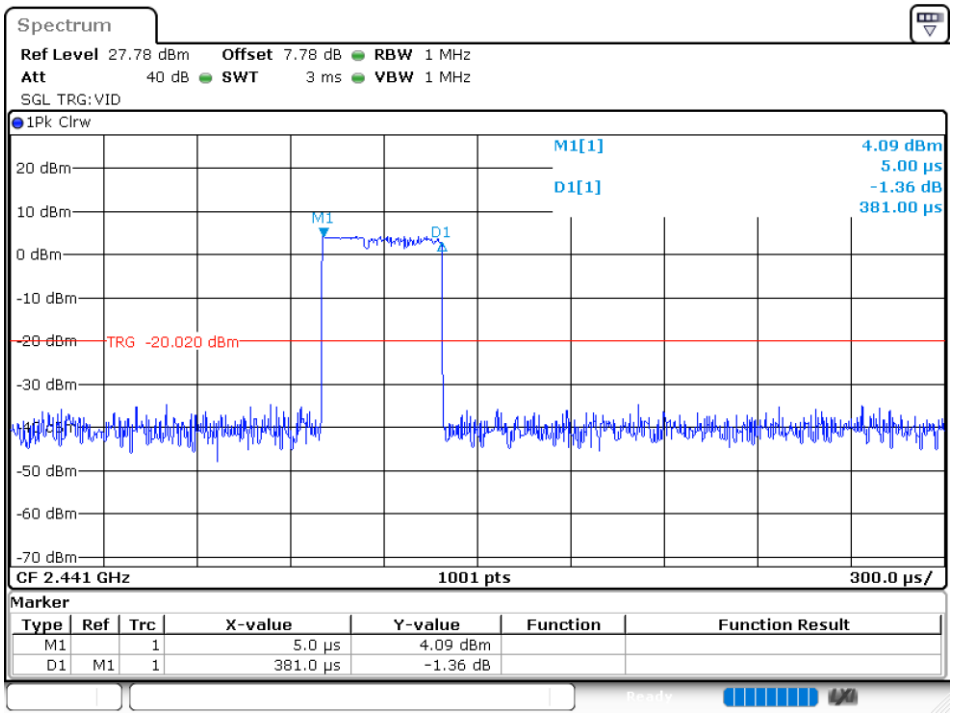

Dwell NVNT 3-DH3 2441MHz

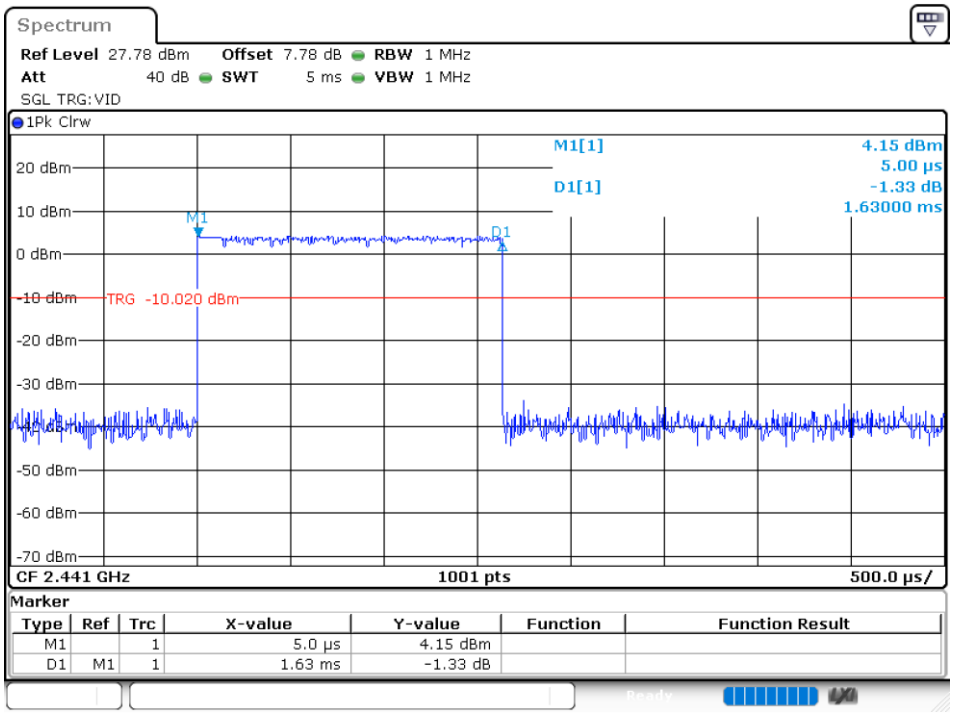
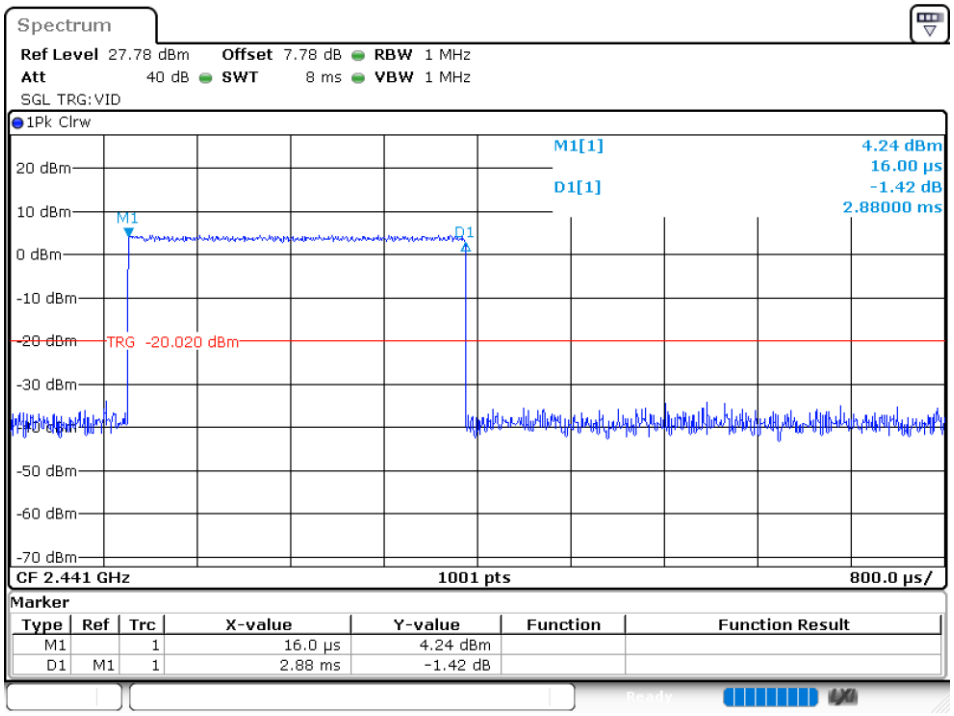
Dwell NVNT 3-DH5 2441MHz