Product Specification

Product Name: Industrial AI Edge Computing Gateway

Product Model: DSGW-380

Revision History

Specification		Sect.	Update Description	By
Rev.	Date			
1.0	2023.09.01		New Version Release	Hubert

Approvals

Organization	Name	Title	Date

Floor 8 | Building A Wan Tong Center | HangZhou 310004 | China | **Tel**: +86 -571 -86769027/88810480
Website: www. dusuniot.com www.dusunremotes.com www.hzdusun.com

Contents

1. Product Description 4

1.1. Purpose and Description 4
1.2. Product Feature Summary 4
1.3. Hardware Block Diagram 5

2. Mechanical Requirement 5

2.1. Drawings and Interface 5
2.2. Interface 6

3. Specification 7

3.1. Technical Specification 7

4. QA Requirement 10

Floor 8 | Building A Wan Tong Center | HangZhou 310004 | China | **Tel**: +86 -571 -86769027/88810480
Website: www. dusuniot.com www.dusunremotes.com www.hzdusun.com

Model List

Feature / Model	Wi-Fi6	5G	RS232	RS485	LoRa	BLE5.2	Ethernet
DSGW-380-1	●	●	●	●	●	●	●

Floor 8 | Building A Wan Tong Center | HangZhou 310004 | China | **Tel**: +86 -571 -86769027/88810480
Website: www. dusuniot.com www.dusunremotes.com www.hzdusun.com

1. Product Description

1.1. Purpose and Description

The DSGW-380 is an edge computing gateway designed for AI applications based on the RK3588 chip. This chip features an integrated CPU consisting of a quad-core Cortex-A76 alongside a quad-core Cortex-A55 and is further enhanced by a NEON coprocessor. The gateway is also equipped with an NPU (Neural Processing Unit) capable of hybrid operations with INT4, INT8, INT16, and FP16 and offers a computing capacity of up to 6 TOPS. In addition, the DSGW-380 is highly compatible with various neural network models, supporting a range of frameworks such as TensorFlow, MXNet, PyTorch, and Caffe.

The rugged design with aluminum alloy structure, active fan cooling, rich I/O interfaces, and stable performance make the DSGW-380 highly suitable for various applications. These include robotics, autonomous delivery vehicles, low-altitude security, intelligent detection systems, and smart infrastructure. It is the optimal choice for implementing AI computing capabilities at the edge in deep learning scenarios.

1.2. Product Feature Summary

- Supports 5G, 4G LTE CAT4 and CAT1
- Supports Wi-Fi 6 (IEEE 802.11ax)
- Offers powerful computing performance, providing high-performance processing resources for AI edge computing
- Supports a variety of industrial real-time Ethernet and fieldbus protocols, making it compatible with a wide range of industrial equipment
- Coming with rich I/O interfaces
- Supports ROS robot system
- Supports a variety of deep learning framework software, including TensorFlow, MXNet, PyTorch, and Caffe
- Includes an acceleration SDK based on the open-source YOLOV3 algorithm, which provides a variety of API interfaces
- Supports IoT wireless protocols, including BLE 5.2 and LoRaWAN
- Featuring a fully industrial design, making it rugged and ready for harsh conditions

Floor 8 | Building A Wan Tong Center | HangZhou 310004 | China | **Tel**: +86 -571 -86769027/88810480
Website: www. dusuniot.com www.dusunremotes.com www.hzdusun.com

1.3. Hardware Block Diagram

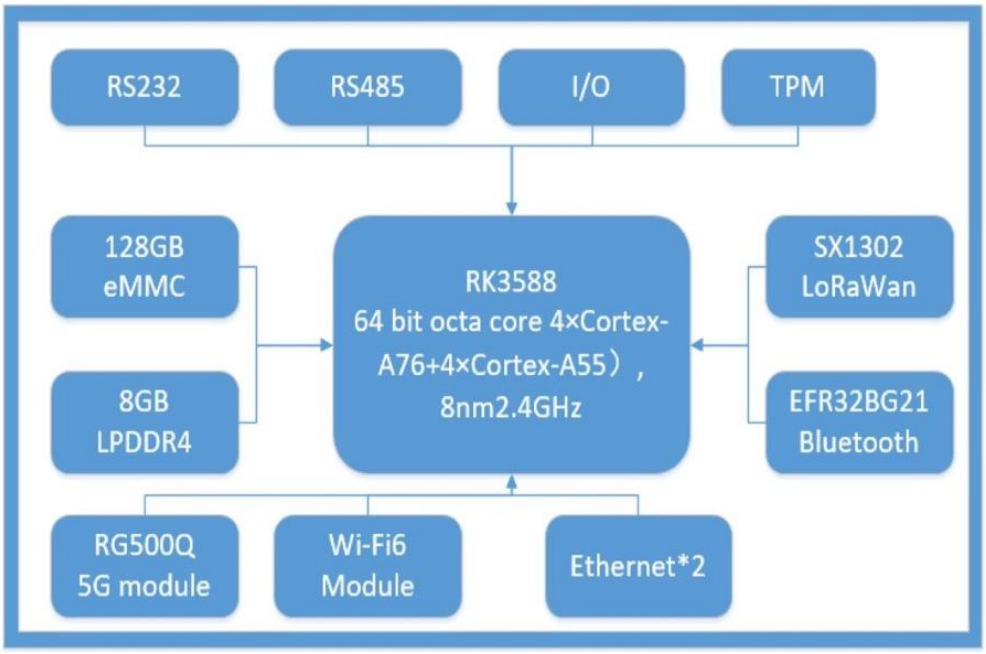

2. Mechanical Requirement

2.1. Drawings and Interface

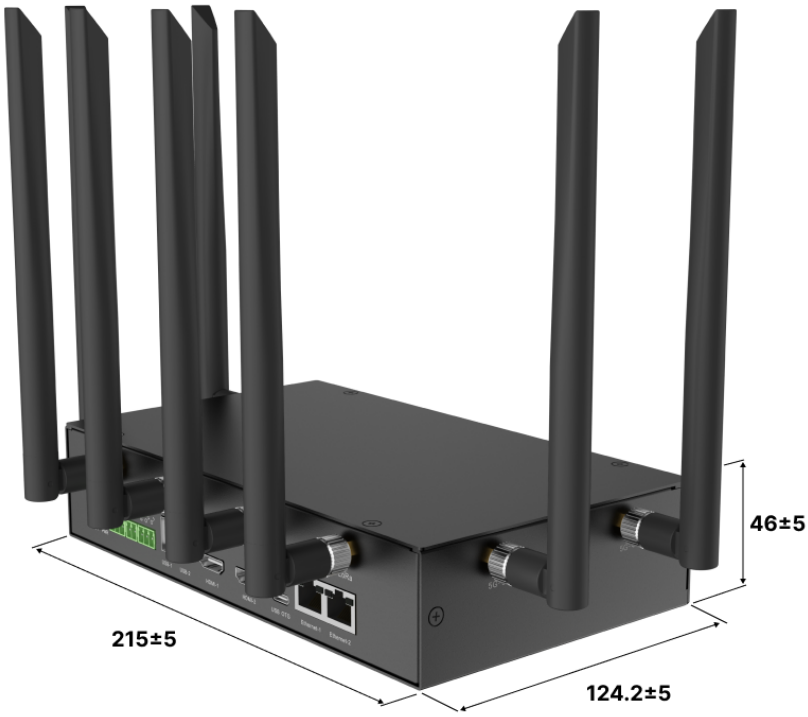

Floor 8 | Building A Wan Tong Center | HangZhou 310004 | China | **Tel**: +86 -571 -86769027/88810480
Website: www. dusuniot.com www.dusunremotes.com www.hzdusun.com

2.2. Interface

Floor 8 | Building A Wan Tong Center | HangZhou 310004 | China | **Tel**: +86 -571 -86769027/88810480
Website: www. dusuniot.com www.dusunremotes.com www.hzdusun.com

3. Specification

3.1. Technical Specification

Technical Specification	
CPU	RK3588 Quad-core ARM Cortex-A76 and Quad-core ARM Cortex-A55
System	Debian 11
RAM	8 GB LPDDR4
Storage	64 GB eMMC
Power Supply	Input: DC 12V/4A
Indicator LEDs	The Power LED remains GREEN when the device is on. The 5G LED flashes BLUE when functioning correctly. The Wi-Fi LED flashes BLUE when operating properly. The LoRa LED remains BLUE when functioning correctly.
Reset Button	Factory reset button. To reset the Gateway to its original factory settings, press and hold it for more than 10 seconds
I/O Port	IO1/IO2 DI DO AI
Ethernet	2 * RJ45 Gigabit
SIM Card Slot	1 * SIM Card Slot
Antenna	1*BLE, 4*LTE(5G), 1*LoRa, 2*Wi-Fi(2.4G/5G)
RS232	1*RS232
RS485	1*RS485
CAN	1
HDMI	2
USB Port	2*USB 3.0
OTG 2.0	USB Type C
Installation	DIN-Rail, Wall Mounting
Protection Rating	IP 30
Shell Material	Aluminum alloy
Storage Temperature	-40℃~85℃
Operating Temperature	-25℃~75℃
Ambient Humidity	5~95%

Floor 8 | Building A Wan Tong Center | HangZhou 310004 | China | **Tel**: +86 -571 -86769027/88810480
Website: www. dusuniot.com www.dusunremotes.com www.hzdusun.com

Performance Requirement	
Wi-Fi Performance	**WLAN Standard :** IEEE 802.11b/g/n/ax, CSMA/CA Frequency Range 2.4~2.4835GHz (2.4GHz ISM Band) Channels Ch1~Ch13 (For 20MHz Channels) **Modulation:** 802.11b (DSSS): CCK, DQPSK, DBPSK; 802.11g (OFDM): BPSK, QPSK, QAM16, QAM64; 802.11n (OFDM): BPSK, QPSK, QAM16, QAM64; 802.11ax (OFDMA): BPSK, BPSK_DCM, QPSK, QPSK_DCM, QAM16, QAM16_DCM, QAM64, QAM256, QAM1024; 802.11b: 1, 2, 5.5, 11Mbps; 802.11g: 6, 9, 12, 18, 24, 36, 48, 54Mbps; 802.11n (HT20): MCS0~MCS7(1T1R_SISO) 6.5~72.2Mbps; 802.11n (HT20): MCS8~MCS15(2T2R_MIMO) 13~144.4Mbps; 802.11n (HT40): MCS0~MCS7(1T1R) 13.5~150Mbps; 802.11n (HT40): MCS8~MCS15(2T2R) 27~300Mbps; 802.11ax (HE_MU,26~242RU): MCS0~MCS11(1T1R) 0.4~143.4Mbps; 802.11ax (HE_MU,26~242RU): MCS0~MCS11(2T2R) 0.8~286.8Mbps; 802.11ax(HE_SU,non-OFDMA20MHz):MCS0~MCS11(1T1R)3.6~143.4Mbps; 802.11ax(HE_SU,non-OFDMA20MHz):MCS0~MCS11(2T2R) 7.3~286.8Mbps; 802.11ax(HE_SU,non-OFDMA40MHz):MCS0~MCS11(1T1R) 7.3~286.8Mbps; 802.11ax(HE_SU,non-OFDMA40MHz):MCS0~MCS11(2T2R)14.6~573.5Mbps; **Frequency Tolerance : ≦±15ppm** **Frequency Range :** 5.15~5.25GHz; 5.25~5.35GHz; 5.47~5.73GHz; 5.735~5.835GHz (5GHz ISM Band) **Channels :** Ch36, Ch40, Ch44, Ch48; Ch52~Ch64 Ch100~Ch140; Ch149~Ch165 (For 20MHz Channels) **Modulation :** 802.11a (OFDM): BPSK, QPSK, QAM16, QAM64; 802.11n (OFDM): BPSK, QPSK, QAM16, QAM64; 802.11ac (OFDM): BPSK, QPSK, QAM16, QAM64, QAM256; 802.11ax (OFDMA): BPSK, BPSK_DCM, QPSK, QPSK_DCM, QAM16, QAM16_DCM, QAM64, QAM256, QAM1024; **Date Rate :** 802.11a: 6, 9, 12, 18, 24, 36, 48, 54Mbps 802.11n (HT20): MCS0~MCS7(1T1R_SISO) 6.5~72.2Mbps 802.11n (HT20): MCS8~MCS15(2T2R_MIMO) 13~144.4Mbps 802.11n (HT40): MCS0~MCS7(1T1R) 13.5~150Mbps 802.11n (HT40): MCS8~MCS15(2T2R) 27~300Mbps

Floor 8 | Building A Wan Tong Center | HangZhou 310004 | China | **Tel**: +86 -571 -86769027/88810480
Website: www. dusuniot.com www.dusunremotes.com www.hzdusun.com

	802.11ac (VHT20): MCS0~MCS8(1T1R) 6.5~86.7Mbps 802.11ac (VHT20): MCS0~MCS8(2T2R) 13~173.3Mbps 802.11ac (VHT40): MCS0~MCS9(1T1R)13.5~200Mbps 802.11ac (VHT40): MCS0~MCS9(2T2R)27~400Mbps 802.11ac (VHT80): MCS0~MCS9(1T1R)29.3~433.3Mbps 802.11ac (VHT80): MCS0~MCS9(2T2R)58.5~866.7Mbps 802.11ax (HE_MU,26~484RU): MCS0~MCS11(1T1R) 0.4~286.8Mbps 802.11ax (HE_MU,26~484RU): MCS0~MCS11(2T2R) 0.8~573.5Mbps 802.11ax (HE_SU,non-OFDMA 20MHz): MCS0~MCS11(1T1R) 3.6~143.4Mbps 802.11ax (HE_SU,non-OFDMA 20MHz): MCS0~MCS11(2T2R) 7.3~286.8Mbps 802.11ax (HE_SU,non-OFDMA 40MHz): MCS0~MCS11(1T1R) 7.3~286.8Mbps 802.11ax (HE_SU,non-OFDMA40MHz):MCS0~MCS11(2T2R) 14.6~573.5Mbps 802.11ax (HE_SU,non-OFDMA80MHz):MCS0~MCS11(1T1R) 15.3~600.4Mbps 802.11ax (HE_SU,non-OFDMA80MHz): MCS0~MCS11(2T2R) 30.6~1201Mbps
Bluetooth Performance	• TX Power: 19.5dBm • Range: 150 meters minimum, open filed • Receiving Sensibility: -80dBm@0.1%BER • Frequency offset: +/-20KHZ • Frequency Range (MHz):2401.0~2483.5 • Low Frequency (MHz):2400 • High Frequency (MHz):2483.5 • E.i.r.p (Equivalent Isotopically Radiated power) (mW)<10mW • Bandwidth (MHz):2MHz • Modulation: GFSK
5G RM500Q-CN/ RM500Q-AE/RM502QAE/ RM505Q-AE	• 5G SA Sub-6: Max. 2.1Gbps (DL)/ Max. 900Mbps (UL) • 5G NSA Sub-6: Max. 2.5Gbps (DL)/Max. 525/550Mbps (UL) • 5G SA Sub-6: Max. 2.1Gbps (DL)/Max. 450Mbps (UL)(RM500Q-AE/ RM505Q-AE); Max. 4.2Gbps (DL)/Max. 450Mbps (UL)(RM502Q-AE) • 5G NSA Sub-6: Max. 2.5Gbps (DL)/Max. 650Mbps (UL)(RM500Q-AE/ RM505Q-AE); Max. 5.0Gbps (DL)/Max. 650Mbps (UL)(RM502Q-AE) • LTE-FDD: Max. 1Gbps (DL)/Max. 200Mbps (UL) • LTE-FDD: Max. 1Gbps (DL)/Max. 200Mbps (UL) (RM500Q-AE/RM505Q-AE) • LTE-FDD: Max. 2Gbps (DL)/Max. 200Mbps (UL) (RM502Q-AE) 5G NR: n1/n28/n41/n78/n79 • LTE-FDD: B1/B3/B5/B8 • LTE-TDD: B34/B38/B39/B40/B41 • WCDMA: B1/B8 • 5GNR:n1/n2/n3/n5/n7/n8/n12/n20/n25/n28/n38/n40/n41/n48/n66/n71/n77/n78/n79 • LTE-FDD: B1/B2/B3/B4/B5/B7/B8/B12(B17)/B13/B14/B18/B19/B20/B25/B26/B28/B29/B30

Floor 8 | Building A Wan Tong Center | HangZhou 310004 | China | **Tel**: +86 -571 -86769027/88810480
Website: www. dusuniot.com www.dusunremotes.com www.hzdusun.com

	/B32/B66/B71 • LTE-TDD: B34/B38/39/B40/B41/B42/B43/B4

4. QA Requirement

Information Description	Standard(Yes) Custom(No)
ESD Testing	Yes
RF Antenna Analysis	Yes
Environmental Testing	Yes
Reliability Testing	Yes
Certification	FCC, CE, SRRC

Floor 8 | Building A Wan Tong Center | HangZhou 310004 | China | **Tel**: +86 -571 -86769027/88810480
Website: www. dusuniot.com www.dusunremotes.com www.hzdusun.com

FCC Statement

1. This device complies with Part 15 of the FCC Rules. Operation is subject to the following two conditions:

(1) This device may not cause harmful interference.

(2) This device must accept any interference received, including interference that may cause undesired operation.

2. Changes or modifications not expressly approved by the party responsible for compliance could void the user's authority to operate the equipment.

NOTE:

This equipment has been tested and found to comply with the limits for a Class B digital device, pursuant to Part 15 of the FCC Rules. These limits are designed to provide reasonable protection against harmful interference in a residential installation.

This equipment generates uses and can radiate radio frequency energy and, if not installed and used in accordance with the instructions, may cause harmful interference to radio communications. However, there is no guarantee that interference will not occur in a particular installation. If this equipment does cause harmful interference to radio or television reception, which can be determined by turning the equipment off and on, the user is encouraged to try to correct the interference by one or more of the following measures:

Reorient or relocate the receiving antenna.

Increase the separation between the equipment and receiver.

Connect the equipment into an outlet on a circuit different from that to which the receiver is connected.

Consult the dealer or an experienced radio/TV technician for help.

To comply with RF exposure requirements, a minimum separation distance of 20 cm must be maintained between the user’s body and the device, including the antenna.