MEASUREMENT REPORT

FCC PART 15.249

FCC ID:	2AUXNROXS2
Applicant:	A-Champs Ltd.
Product:	Interactive Training System
Model No.:	ROX Pro
Brand Name:	A-Champs
FCC Classification:	Part 15 Low Power Communication Device Transmitter (DXX)
FCC Rule(s):	Part 15.249
Test Procedure(s):	ANSI C63.10 - 2013
Test Date:	February 27 ~ September 02, 2021

Reviewed By: Sunny Sun

Approved By: Robin Wu

ACCREDITED
TESTING LABORATORY
CERTIFICATE #3628.01

The test results relate only to the samples tested.

This equipment has been shown to be capable of compliance with the applicable technical standards as indicated in the measurement report and was tested in accordance with the measurement procedures specified in ANSI C63.10-2013. Test results reported herein relate only to the item(s) tested.

The test report shall not be reproduced except in full without the written approval of MRT Technology (Suzhou) Co., Ltd.

Revision History

Report No.	Version	Description	Issue Date	Note
2102RSU052-U2	Rev. 01	Initial Report	12-11-2021	Invalid
2102RSU052-U2	Rev. 02	Update Test Data	06-29-2022	Valid

CONTENTS

Description Page

1. GENERAL INFORMATION 5
1.1. Applicant 5
1.2. Manufacturer 5
1.3. Testing Facility 5
1.4. Product Information 6
1.5. Test Mode 6
1.6. Configuration of Tested System 6
1.7. Test Environment Condition 7
2. ANTENNA REQUIREMENTS 8
3. TEST EQUIPMENT CALIBRATION DATE 9
4. MEASUREMENT UNCERTAINTY 11
5. TEST RESULT 12
5.1. Summary 12
5.2. AC Conducted Emissions Measurement 13
5.2.1. Test Limit 13
5.2.2. Test Setup 13
5.2.3. Test Result 13
5.3. Radiated Emission 14
5.3.1. Test Limit 14
5.3.2. Test Procedure Used 15
5.3.3. Test Setting 15
5.3.4. Test Setup 17
5.3.5. Test Result 18
5.4. Radiated Restricted Band Edge Measurement 21
5.4.1. Test Limit 21
5.4.2. Test Procedure Used 22
5.4.3. Test Setting 22
5.4.4. Test Setup 23
5.4.5. Test Result 24
5.5. 20dB Bandwidth Measurement 28
5.5.1. Test Limit 28
5.5.2. Test Procedure used 28
5.5.3. Test Setting 28
5.5.4. Test Setup 28
5.5.5. Test Result 29
6. CONCLUSION 30
Appendix A - Test Setup Photograph 31

Appendix B - EUT Photograph 32

1. GENERAL INFORMATION

1.1. Applicant

A-Champs Ltd.

22/F., Bupa Centre, 141 Connaught Road West, HONG KONG, P.R.China

1.2. Manufacturer

A-Champs Ltd.

22/F., Bupa Centre, 141 Connaught Road West, HONG KONG, P.R.China

1.3. Testing Facility

☒	**Test Site - MRT Suzhou Laboratory**				
	Laboratory Location (Suzhou - Wuzhong) D8 Building, No.2 Tian'edang Rd., Wuzhong Economic Development Zone, Suzhou, China **Laboratory Location (Suzhou - SIP)** 4b Building, Liando U Valley, No.200 Xingpu Rd., Shengpu Town, Suzhou Industrial Park, China				
	Laboratory Accreditations				
	A2LA: 3628.01		CNAS: L10551		
	FCC: CN1166		ISED: CN0001		
	VCCI:	☐R-20025	☐G-20034	☐C-20020	☐T-20020
		☐R-20141	☐G-20134	☐C-20103	☐T-20104
☐	**Test Site - MRT Shenzhen Laboratory**				
	Laboratory Location (Shenzhen) 1G, Building A, Junxiangda Building, Zhongshanyuan Road West, Nanshan District, Shenzhen, China				
	Laboratory Accreditations				
	A2LA: 3628.02		CNAS: L10551		
	FCC: CN1284		ISED: CN0105		
☐	**Test Site - MRT Taiwan Laboratory**				
	Laboratory Location (Taiwan) No. 38, Fuxing 2nd Rd., Guishan Dist., Taoyuan City 333, Taiwan (R.O.C.)				
	Laboratory Accreditations				
	TAF: L3261-190725				
	FCC: 291082, TW3261		ISED: TW3261		

1.4. Product Information

Product Name	Interactive Training System
Model No.	ROX Pro
Brand Name	A-Champs
Device Label ID No.	20210111Sample#05
Frequency	2450MHz
Type of Modulation	GFSK
Temperature	0°C ~ 55°C
Antenna Type	PCB Antenna
Antenna Gain	0dBi
Power Supply	DC 4.8 ~ 5.2V
Remark: The information of EUT was provided by the manufacturer, and the accuracy of the information shall be the responsibility of the manufacturer.	

1.5. Test Mode

Test Mode	Mode 1: Transmit at 2450MHz

1.6. Configuration of Tested System

This device was tested per the guidance ANSI C63.10-2013 was used to reference the appropriate EUT setup for radiated emissions testing.

Connection Diagram
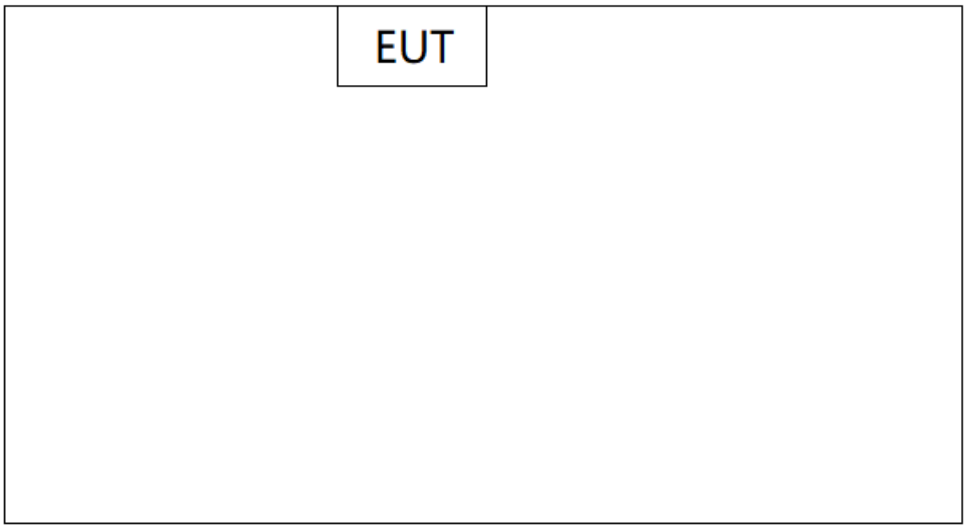

1.7. Test Environment Condition

Ambient Temperature	15°C ~ 35°C
Relative Humidity	20%RH ~ 75%RH

2. ANTENNA REQUIREMENTS

Excerpt from §15.203 of the FCC Rules/Regulations:

"An intentional radiator antenna shall be designed to ensure that no antenna other than that furnished by the responsible party can be used with the device. The use of a permanently attached antenna or of an antenna that uses a unique coupling to the intentional radiator shall be considered sufficient to comply with the provisions of this section."

- The antenna of the unit is **permanently attached.**
- There are no provisions for connection to an external antenna.

Conclusion:

This unit complies with the requirement of §15.203.

3. TEST EQUIPMENT CALIBRATION DATE

Radiated Emission (SIP-AC2)

Instrument	Manufacturer	Type No.	Asset No.	Cali. Interval	Cali. Due Date
EMI Test Receiver	R&S	ESR3	MRTSUE06185	1 year	2022/1/12
Signal Analyzer	Keysight	N9010B	MRTSUE06559	1 year	2022/6/24
Horn Antenna	Schwarzbeck	BBHA 9170	MRTSUE06599	1 year	2021/11/26
Preamplifier	EMCI	EMC184045SE	MRTSUE06602	1 year	2021/10/12
Signal Analyzer	Keysight	N9010B	MRTSUE06603	1 year	2021/11/23
Signal Analyzer	Keysight	N9020B	MRTSUE06604	1 year	2021/9/26
EMI Test Receiver	R&S	ESR3	MRTSUE06613	1 year	2022/6/24
Thermohygrometer	testo	608-H1	MRTSUE06623	1 year	2021/12/3
Thermohygrometer	testo	608-H1	MRTSUE06624	1 year	2021/12/3
Preamplifier	EMCI	EMC001330	MRTSUE06643	1 year	2022/1/14
Preamplifier	EMCI	EMC051845SE	MRTSUE06644	1 year	2021/11/9
TRILOG Antenna	Schwarzbeck	VULB 9168	MRTSUE06647	1 year	2022/8/5
Anechoic Chamber	RIKEN	SIP-AC2	MRTSUE06781	1 year	2021/12/24
Loop Antenna	Schwarzbeck	FMZB 1519 B	MRTSUE06937	1 year	2022/3/9

Radiated Emission (SIP-AC3)

Instrument	Manufacturer	Type No.	Asset No.	Cali. Interval	Cali. Due Date
Preamplifier	Schwarzbeck	BBV 9721	MRTSUE06121	1 year	2022/6/9
EMI Test Receiver	R&S	ESR3	MRTSUE06185	1 year	2022/1/12
Signal Analyzer	Keysight	N9010B	MRTSUE06559	1 year	2022/6/24
Horn Antenna	Schwarzbeck	BBHA 9170	MRTSUE06598	1 year	2021/11/26
Signal Analyzer	Keysight	N9010B	MRTSUE06603	1 year	2021/11/23
Signal Analyzer	Keysight	N9020B	MRTSUE06604	1 year	2021/9/26
Horn Antenna	R&S	HF907	MRTSUE06611	1 year	2021/9/13
EMI Test Receiver	R&S	ESR3	MRTSUE06613	1 year	2022/6/24
Thermohygrometer	testo	608-H1	MRTSUE06619	1 year	2021/11/25
Thermohygrometer	testo	608-H1	MRTSUE06622	1 year	2021/12/3
Preamplifier	EMCI	EMC012645SE	MRTSUE06642	1 year	2022/1/14
Preamplifier	EMCI	EMC001330	MRTSUE06643	1 year	2022/1/14
TRILOG Antenna	Schwarzbeck	VULB 9168	MRTSUE06646	1 year	2022/8/26
Anechoic Chamber	RIKEN	SIP-AC3	MRTSUE06782	1 year	2021/12/24
Loop Antenna	Schwarzbeck	FMZB 1519 B	MRTSUE06937	1 year	2022/3/9

Software	Version	Function
EMI Software	V3	EMI Test Software

4. MEASUREMENT UNCERTAINTY

Where relevant, the following test uncertainty levels have been estimated for tests performed on the EUT as specified in CISPR 16-4-2. This uncertainty represents an expanded uncertainty expressed at approximately the 95% confidence level using a coverage factor of k = 2.

AC Conducted Emission Measurement
Measurement Uncertainty for a Level of Confidence of 95% (U=2Uc(y)): 9kHz~150kHz: 3.74dB 150kHz~30MHz: 3.44dB
Radiated Conducted Emission Measurement
Measurement Uncertainty for a Level of Confidence of 95% (U=2Uc(y)): Horizontal: 30MHz~300MHz: 5.04dB 300MHz~1GHz: 4.95dB 1GHz~40GHz: 6.40dB 40GHz~100GHz:6.40dB Vertical: 30MHz~300MHz: 5.24dB 300MHz~1GHz: 6.03dB 1GHz~40GHz: 6.40dB 40GHz~100GHz:6.40dB

5. TEST RESULT

5.1. Summary

FCC Part Section(s)	Test Description	Test Limit	Test Condition	Test Result	Reference
15.209 15.249	General Field Strength Limits (Restricted Bands and Radiated Emission Limits)	Emissions in restricted bands must meet the radiated limits detailed in 15.209	Radiated	Pass	Section 5.2& 5.3
15.215(c)	20dB Bandwidth	20 dB bandwidth of the emission in the specific band	Radiated	No Limit	Section 5.4

Note:

1) For radiated emission test, every axis (X, Y, Z) was also verified. The test results shown in the following sections represent the worst-case emissions.
2) All modes of operation were investigated. The test results shown in the following sections represent the worst-case emissions.

5.2. AC Conducted Emissions Measurement

5.2.1.Test Limit

FCC Part 15 Subpart C Paragraph 15.207 Limits		
Frequency (MHz)	QP (dBμV)	Average (dBμV)
0.15 - 0.50	66 - 56	56 - 46
0.50 - 5.0	56	46
5.0 - 30	60	50
Note 1: The lower limit shall apply at the transition frequencies. Note 2: The limit decreases linearly with the logarithm of the frequency in the range 0.15MHz to 0.5MHz.		

5.2.2.Test Setup

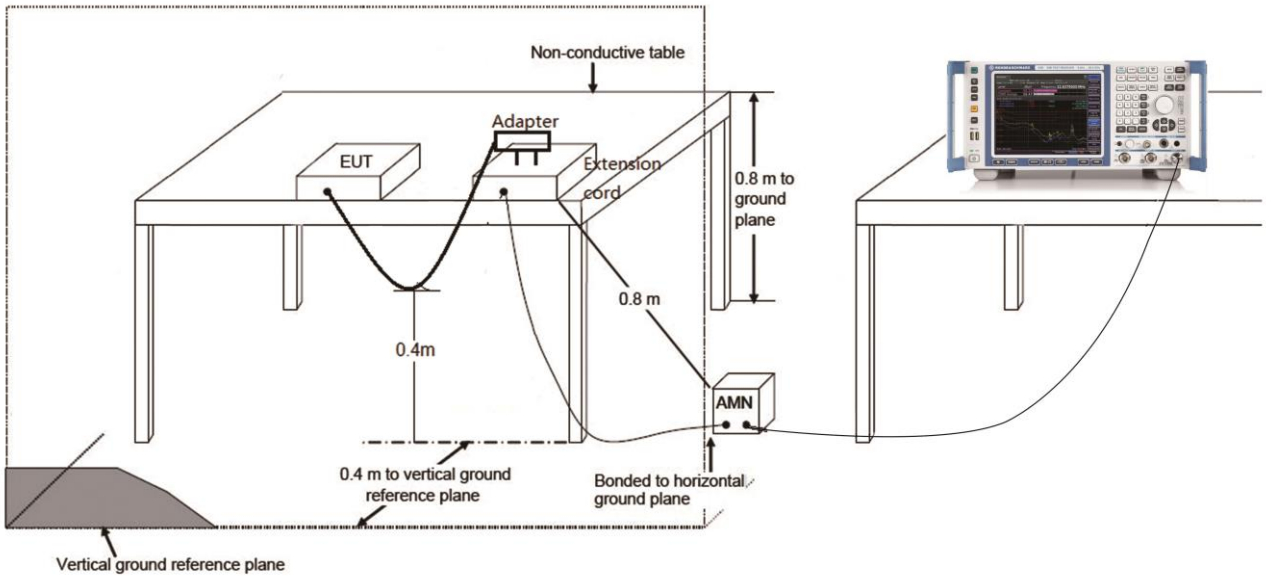

5.2.3.Test Result

The EUT is powered by internal battery supply, so this requirement does not apply.

5.3. Radiated Emission

5.3.1.Test Limit

FCC Part 15 Subpart C Paragraph 15.249		
Fundamental Frequency (MHz)	Field Strength of Fundamental (mV/m)	Field Strength of Harmonics (uV/m)
902 ~ 928	50	500
2400 ~ 2483.5	50	500
5725 ~ 5875	50	500
24000 ~ 24250	250	2500
Note: FCC Part 15.249 (d), Emissions radiated outside of the specified frequency bands, except for harmonics, shall be attenuated by at least 50 dB below the level of the fundamental or to the general radiated emission limits in §15.209, whichever is the lesser attenuation.		

FCC Part 15 Subpart C Paragraph 15.209		
Frequency (MHz)	Field Strength (uV/m)	Measurement Distance (m)
0.009 ~ 0.490	2400/F(kHz)	300
0.490 ~ 1.705	24000/F(kHz)	30
1.705 ~ 30.0	30	30
30 ~ 88	100**	3
88 ~ 216	150**	3
216 ~ 960	200**	3
Above 960	500	3
Note 1: The lower limit shall apply at the transition frequency. Note 2: Distance refers to the distance in meters between the measuring instrument antenna and the closed point of any part of the device or system. Note 3: E field strength (dBμV/m) = 20 log E field strength (uV/m).		

5.3.2.Test Procedure Used

ANSI C63.10-2013 Section 6.3, 6.4, 6.5, 6.6, 7.5

5.3.3.Test Setting

Table 1 - RBW as a function of frequency

Frequency	RBW
9 ~ 150 kHz	200 Hz
0.15 ~ 30 MHz	9 kHz
30 ~ 1000 MHz	120 kHz
> 1000 MHz	1 MHz

Measurements below 1GHz

1. Analyzer center frequency was set to the frequency of the radiated spurious emission of interest

2. RBW = as specified in Table 1

3. Detector = CISPR quasi-peak (a linear average detector for 9-90 kHz and 110-490 kHz)

4. Sweep time = auto couple

5. Trace was allowed to stabilize

Peak Measurements above 1GHz

1. Analyzer center frequency was set to the frequency of the radiated spurious emission of interest

2. RBW = 1MHz

3. VBW = 3MHz

4. Detector = peak

5. Sweep time = auto couple

6. Trace mode = max hold

7. Trace was allowed to stabilize

Average Measurements above 1GHz (Method VB)

1. Analyzer center frequency was set to the frequency of the radiated spurious emission of interest

2. RBW = 1MHz

3. VBW; If the EUT is configured to transmit with duty cycle ≥ 98%, set VBW = 10 Hz.

If the EUT duty cycle is < 98%, set VBW ≥ 1/T. T is the minimum transmission duration.

4. Detector = Peak

5. Sweep time = auto

6. Trace mode = max hold

7. Trace was allowed to stabilize

5.3.4.Test Setup

30MHz ~ 1GHz Test Setup:

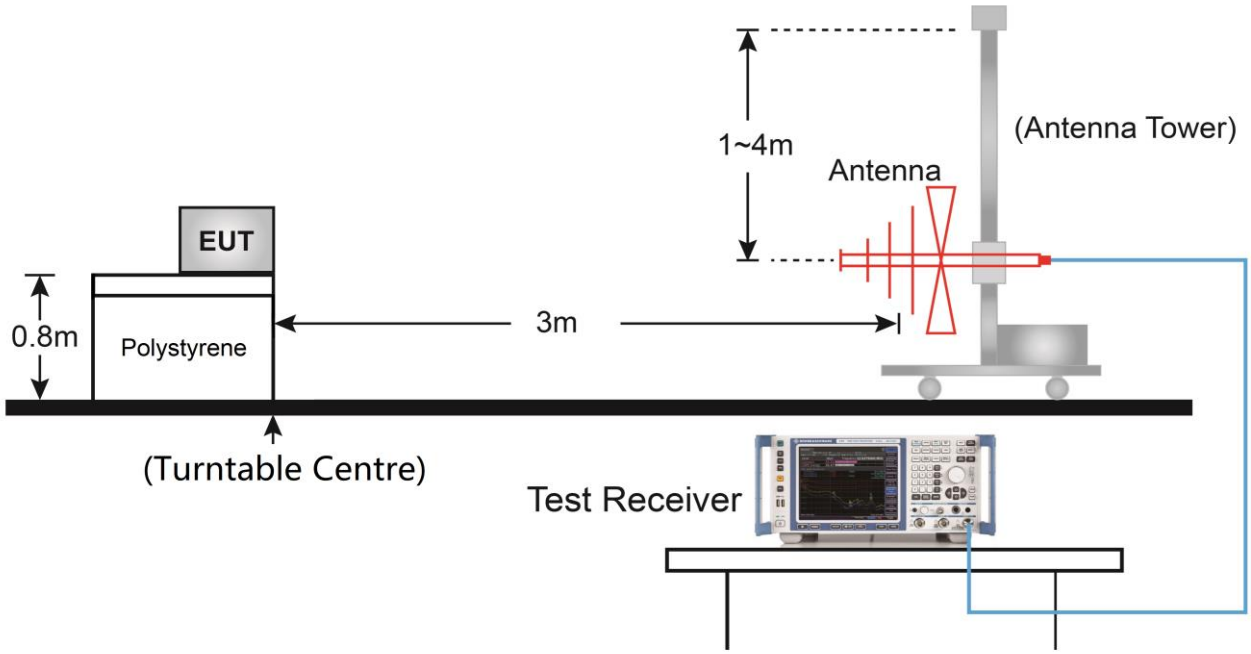

1GHz ~ 40GHz Test Setup:

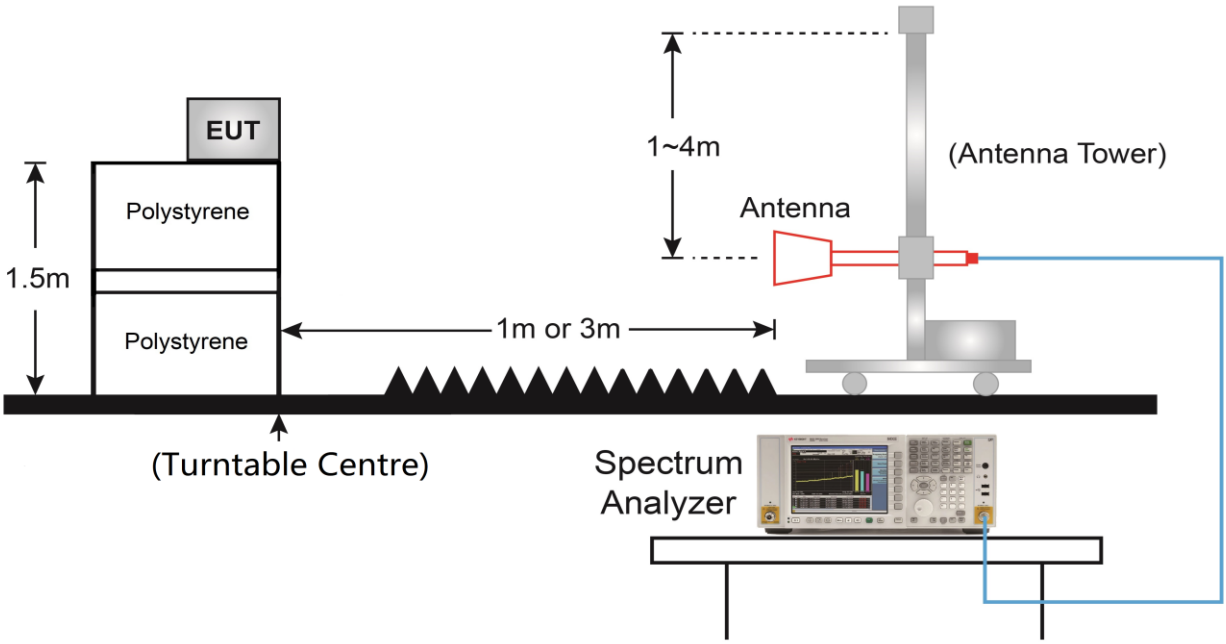

5.3.5.Test Result

Test Site	SIP-AC2	Test Date	2021/08/11
Test Engineer	Edward Zhang		

Test Mode	Time On (ms)	One Period (ms)	Duty Cycle (%)	Duty Cycle Factor (dB)
Mode 1	0.35	100	0.35	-49.1

Note: Duty Cycle Factor (dB) = 20*Log_{10}(Duty Cycle) (dB).

Duty Cycle	
Mode 1	
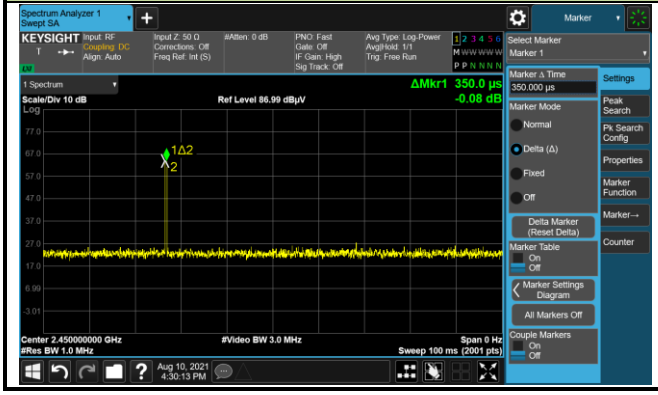	

Test Site	SIP-AC2	Test Date	2021/08/11
Test Engineer	Edward Zhang	Remark	Fundamental Radiated Emission

Frequency (MHz)	Reading Level (dBµV)	Duty Cycle Factor (dB)	Factor (dB/m)	Measure Level (dBµV/m)	Limit (dBµV/m)	Margin (dB)	Detector	Polarization
2450	69.1	N/A	32.4	101.5	114.0	-12.5	Peak	Horizontal
	69.1	-49.1	32.4	52.4	94.0	-41.6	Average	Horizontal
	63.4	N/A	32.4	95.8	114.0	-18.2	Peak	Vertical
	63.4	-49.1	32.4	46.7	94.0	-47.3	Average	Vertical

Note 1: Duty Cycle Factor = 20 * log_{10} (Duty Cycle) = -49.1

Note 2: Peak Measure Level (dBµV/m) = Reading Level (dBµV) + Factor (dB/m)

Factor (dB/m) = Cable Loss (dB) + Antenna Factor (dB/m) - Pre_Amplifier Gain (dB)

AV Measure Level (dBµV/m) = Peak Measure Level (dBµV/m) + Duty Cycle Factor (dB).

Test Site	SIP-AC1	Test Date	2021/02/27
Test Engineer	Stephen Dong	Remark:	Radiated Emission Below 1GHz

Frequency (MHz)	Reading Level (dBμV)	Factor (dB/m)	Measure Level (dBμV/m)	Limit (dBμV/m)	Margin (dB)	Detector	Polarization
32.9	0.9	16.7	17.6	40.0	-22.4	QP	Horizontal
35.3	0.4	17.0	17.4	40.0	-22.6	QP	Horizontal
44.1	-1.5	17.8	16.3	40.0	-23.7	QP	Horizontal
48.4	0.6	17.7	18.3	40.0	-21.7	QP	Horizontal
55.7	0.3	17.3	17.6	40.0	-22.4	QP	Horizontal
67.3	1.5	15.9	17.4	40.0	-22.6	QP	Horizontal
33.9	1.4	16.9	18.3	40.0	-21.7	QP	Vertical
39.2	0.5	17.4	17.9	40.0	-22.1	QP	Vertical
48.4	1.6	17.7	19.3	40.0	-20.7	QP	Vertical
52.8	0.0	17.6	17.6	40.0	-22.4	QP	Vertical
63.0	0.6	16.7	17.3	40.0	-22.7	QP	Vertical
67.3	7.9	15.9	23.8	40.0	-16.2	QP	Vertical

Note: Measure Level (dBμV/m) = Reading Level (dBμV) + Factor (dB/m)

Factor (dB/m) = Cable Loss (dB) + Antenna Factor (dB/m)

Test Site	SIP-AC1	Test Date	2021/02/27
Test Engineer	Stephen Dong	Remark:	Radiated Emission above 1GHz

Frequency (MHz)	Reading Level (dBμV)	Factor (dB/m)	Measure Level @ 3m (dBμV/m)	Limit (dBμV/m)	Margin (dB)	Detector	Polarization
12670.5	50.2	-3.5	46.7	74.0	-27.3	Peak	Horizontal
16835.5	47.3	4.3	51.6	74.0	-22.4	Peak	Horizontal
17923.5	46.5	5.9	52.4	74.0	-21.6	Peak	Horizontal
23852.0	56.4	-9.0	47.4	74.0	-26.6	Peak	Horizontal
31706.0	59.4	-9.3	50.1	74.0	-23.9	Peak	Horizontal
12475.0	49.9	-3.7	46.2	74.0	-27.8	Peak	Vertical
15773.0	46.9	2.8	49.7	74.0	-24.3	Peak	Vertical
17974.5	46.6	5.7	52.3	74.0	-21.7	Peak	Vertical
23731.0	56.2	-8.9	47.3	74.0	-26.7	Peak	Vertical
31497.0	59.9	-9.2	50.7	74.0	-23.3	Peak	Vertical

Notes:

1. Measure Level (dBμV/m) = Reading Level (dBμV) + Factor (dB/m)
   Factor (dB/m) = Cable Loss (dB) + Antenna Factor (dB/m) - Pre-Amplifier Gain (dB)
2. Average measurement was not performed when the peak level lower than average limit.
3. The amplitude of radiated emissions (frequency range from 9kHz ~ 30MHz, 18 ~ 40GHz) is that proximity to ambient noise, which also are attenuated more than 20 dB below the permissible value. Therefore, the data is not presented in the report.

5.4. Radiated Restricted Band Edge Measurement

5.4.1.Test Limit

For 15.205 requirement:

Radiated emissions which fall in the restricted bands, as defined in Section 15.205(a) of FCC part 15, must also comply with the radiated emission limits specified in Section 15.209(a).

Frequency (MHz)	Frequency (MHz)	Frequency (MHz)	Frequency (GHz)
0.090 - 0.110	16.42 - 16.423	399.9 - 410	4.5 - 5.15
[1] 0.495 - 0.505	16.69475 - 16.69525	608 - 614	5.35 - 5.46
2.1735 - 2.1905	16.80425 - 16.80475	960 - 1240	7.25 - 7.75
4.125 - 4.128	25.5 - 25.67	1300 - 1427	8.025 - 8.5
4.17725 - 4.17775	37.5 - 38.25	1435 - 1626.5	9.0 - 9.2
4.20725 - 4.20775	73 - 74.6	1645.5 - 1646.5	9.3 - 9.5
6.215 - 6.218	74.8 - 75.2	1660 - 1710	10.6 - 12.7
6.26775 - 6.26825	108 - 121.94	1718.8 - 1722.2	13.25 - 13.4
6.31175 - 6.31225	123 - 138	2200 - 2300	14.47 - 14.5
8.291 - 8.294	149.9 - 150.05	2310 – 2390	15.35 - 16.2
8.362 - 8.366	156.52475 - 156.52525	2483.5 - 2500	17.7 - 21.4
8.37625 - 8.38675	156.7 - 156.9	2690 - 2900	22.01 - 23.12
8.41425 - 8.41475	162.0125 - 167.17	3260 - 3267	23.6 - 24.0
12.29 - 12.293	167.72 - 173.2	3332 - 3339	31.2 - 31.8
12.51975 - 12.52025	240 - 285	3345.8 - 3358	36.43 - 36.5
12.57675 - 12.57725	322 - 335.4	3600 - 4400	([2])
13.36 - 13.41	--	--	--

All out of band emissions appearing in a restricted band as specified in Section 15.205 of the Title 47 CFR must not exceed the limits shown in Table per Section 15.209.

FCC Part 15 Subpart C Paragraph 15.209		
Frequency [MHz]	Field Strength [uV/m]	Measured Distance [Meter]
0.009 ~ 0.490	2400/F (kHz)	300
0.490 ~ 1.705	24000/F (kHz)	30
1.705 ~ 30	30	30
30 ~ 88	100	3
88 ~ 216	150	3
216 ~ 960	200	3
Above 960	500	3

5.4.2.Test Procedure Used

ANSI C63.10-2013 Section 6.3, 6.6, 11.13

5.4.3.Test Setting

Peak Field Strength Measurements

1. Analyzer center frequency was set to the frequency of the radiated spurious emission of interest
2. RBW = 1MHz
3. VBW = 3MHz
4. Detector = peak
5. Sweep time = auto couple
6. Trace mode = max hold
7. Trace was allowed to stabilize

Average Field Strength Measurements

1. Analyzer center frequency was set to the frequency of the radiated spurious emission of interest
2. RBW = 1MHz
3. VBW ≥ 1/T
4. As an alternative, the instrument may be set to linear detector mode. Ensure that video filtering is applied in linear voltage domain (rather than in a log or dB domain). Some instruments require linear display mode in order to accomplish this. Others have a setting for Average-VBW Type, which can be set to “Voltage” regardless of the display mode
5. Detector = Peak
6. Sweep time = auto
7. Trace mode = max hold
8. Allow max hold to run for at least 50 times (1/duty cycle) traces

5.4.4.Test Setup

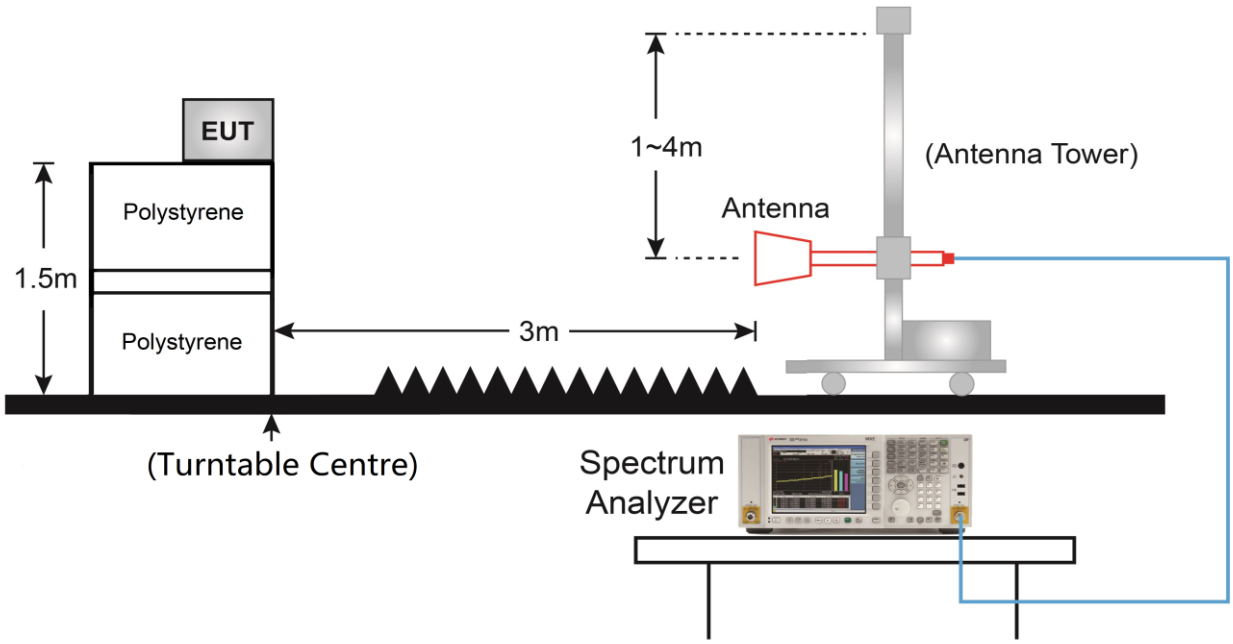

5.4.5.Test Result

Site: SIP-AC3	Time: 2021/09/01
Limit: FCC_Part15.209_RE(3m)	Engineer: Wayen Wang
Probe: SIP-AC3_HF907_102861_1-18GHz	Polarity: Horizontal
EUT: Interactive Training System	Power: By Battery
Note: Transmit at 2450MHz	

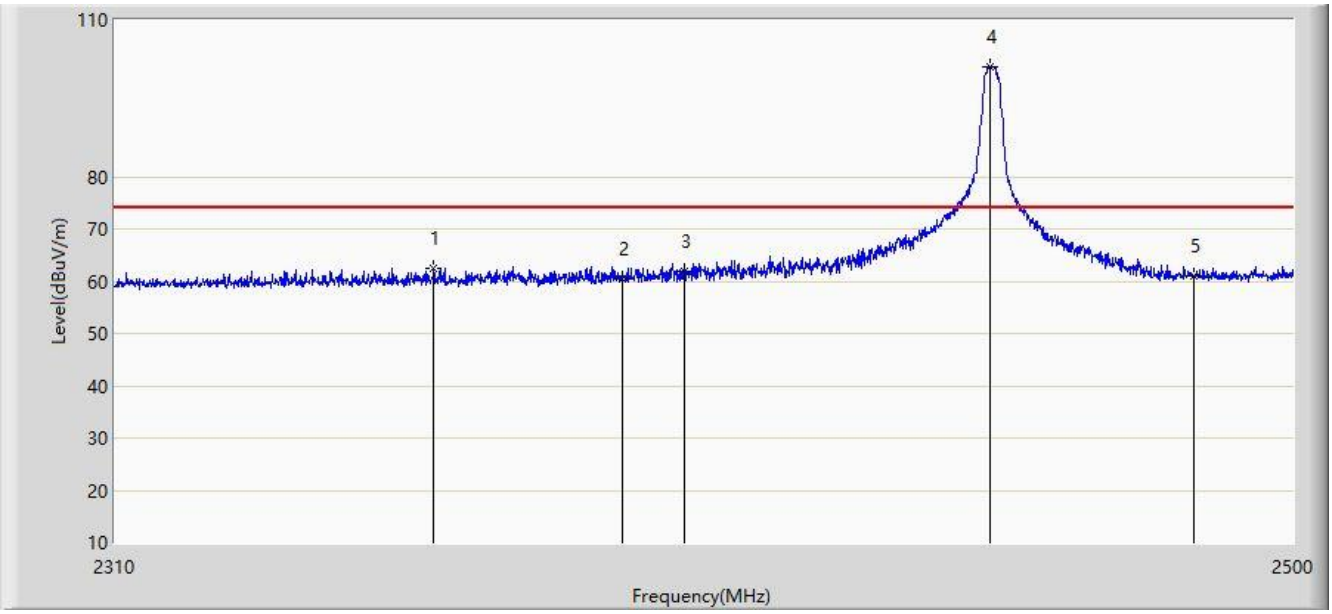

No	Mark	Frequency (MHz)	Measure Level (dBμV/m)	Reading Level (dBμV)	Margin (dB)	Limit (dBμV/m)	Factor (dB/m)	Type
1	*	2359.970	62.457	30.294	-11.543	74.000	32.163	PK
2		2390.000	60.347	28.082	-13.653	74.000	32.265	PK
3		2400.000	61.790	29.783	-12.210	74.000	32.007	PK
4		2449.745	101.154	68.597	N/A	N/A	32.557	PK
5		2483.500	61.005	28.233	-12.995	74.000	32.772	PK

Note 1: Measure Level (dBμV/m) = Reading Level (dBμV) + Factor (dB/m)

Factor (dB/m) = Cable Loss (dB) + Antenna Factor (dB/m)

Note 2: "*" During the radiated emission testing, there was one fundamental frequency (Point 4) shown on the trace. The radiated emission requirements are not intended to be applicable to the intentional transmissions from a radio transmitter as defined by the ITU, nor to any spurious emissions related to these intentional transmissions.

Site: SIP-AC3	Time: 2021/09/01
Limit: FCC_Part15.209_RE(3m)	Engineer: Wayen Wang
Probe: SIP-AC3_HF907_102861_1-18GHz	Polarity: Horizontal
EUT: Interactive Training System	Power: By Battery
Note: Transmit at 2450MHz	

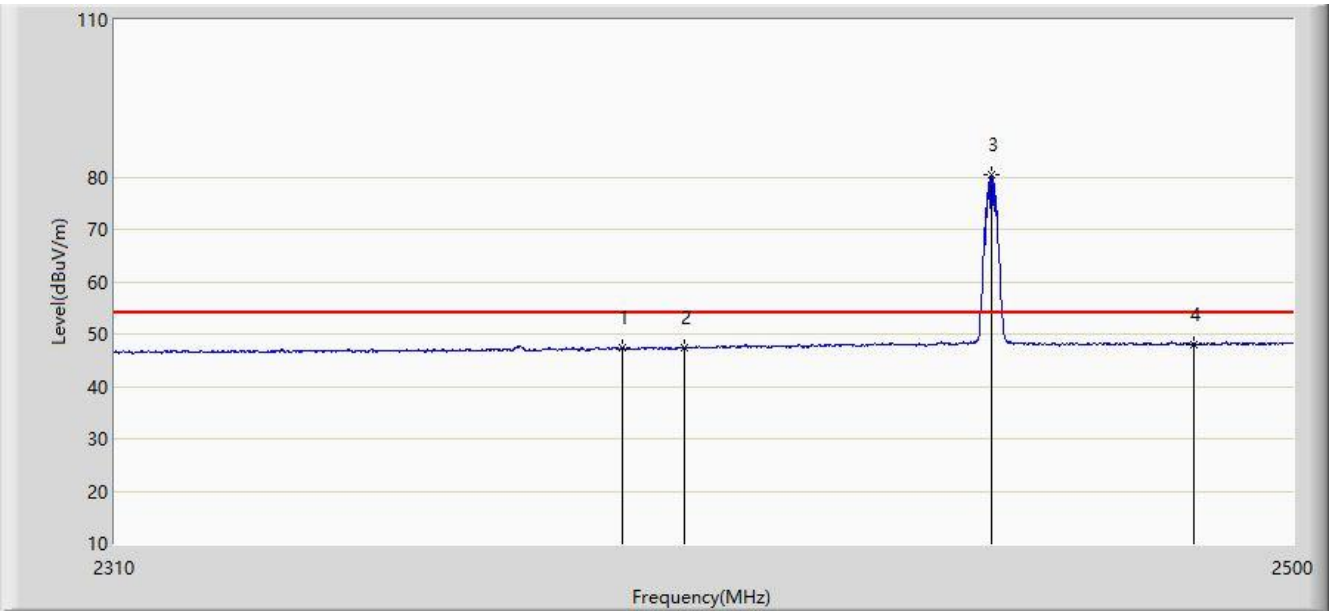

No	Mark	Frequency (MHz)	Measure Level (dBμV/m)	Reading Level (dBμV)	Margin (dB)	Limit (dBμV/m)	Factor (dB/m)	Type
1		2390.000	47.295	15.030	-6.705	54.000	32.265	AV
2		2400.000	47.338	15.331	-6.662	54.000	32.007	AV
3		2450.030	80.470	47.911	N/A	N/A	32.559	AV
4	*	2483.500	48.112	15.340	-5.888	54.000	32.772	AV

Note 1: Measure Level (dBμV/m) = Reading Level (dBμV) + Factor (dB/m)

Factor (dB/m) = Cable Loss (dB) + Antenna Factor (dB/m) - Pre _Amplifier Gain (dB)

Note 2: "*" During the radiated emission testing, there was one fundamental frequency (Point 3) shown on the trace. The radiated emission requirements are not intended to be applicable to the intentional transmissions from a radio transmitter as defined by the ITU, nor to any spurious emissions related to these intentional transmissions.

Site: SIP-AC3	Time: 2021/09/01
Limit: FCC_Part15.209_RE(3m)	Engineer: Wayen Wang
Probe: SIP-AC3_HF907_102861_1-18GHz	Polarity: Vertical
EUT: Interactive Training System	Power: By Battery
Note: Transmit at 2450MHz	

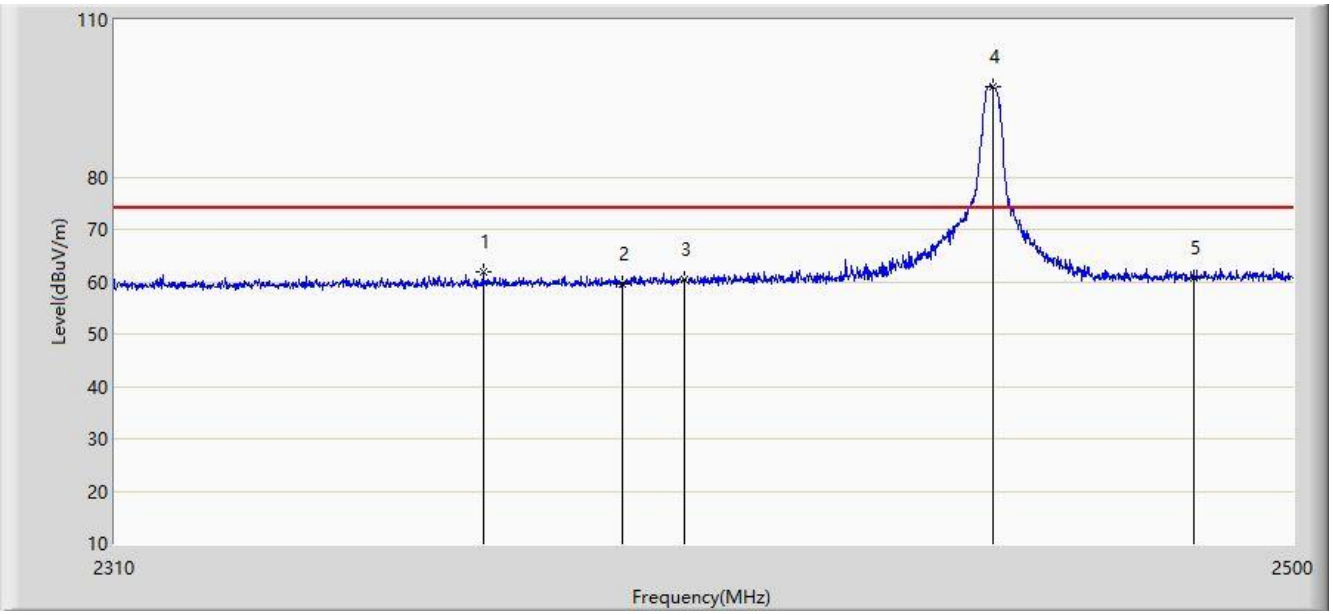

No	Mark	Frequency (MHz)	Measure Level (dBμV/m)	Reading Level (dBμV)	Margin (dB)	Limit (dBμV/m)	Factor (dB/m)	Type
1	*	2367.855	61.932	29.755	-12.068	74.000	32.177	PK
2		2390.000	59.612	27.347	-14.388	74.000	32.265	PK
3		2400.000	60.357	28.350	-13.643	74.000	32.007	PK
4		2450.315	97.196	64.635	N/A	N/A	32.561	PK
5		2483.500	60.628	27.856	-13.372	74.000	32.772	PK

Note 1: Measure Level (dBμV/m) = Reading Level (dBμV) + Factor (dB/m)

Factor (dB/m) = Cable Loss (dB) + Antenna Factor (dB/m)

Note 2: "*" During the radiated emission testing, there was one fundamental frequency (Point 4) shown on the trace. The radiated emission requirements are not intended to be applicable to the intentional transmissions from a radio transmitter as defined by the ITU, nor to any spurious emissions related to these intentional transmissions.

Site: SIP-AC3	Time: 2021/09/01
Limit: FCC_Part15.209_RE(3m)	Engineer: Wayen Wang
Probe: SIP-AC3_HF907_102861_1-18GHz	Polarity: Vertical
EUT: Interactive Training System	Power: By Battery
Note: Transmit at 2450MHz	

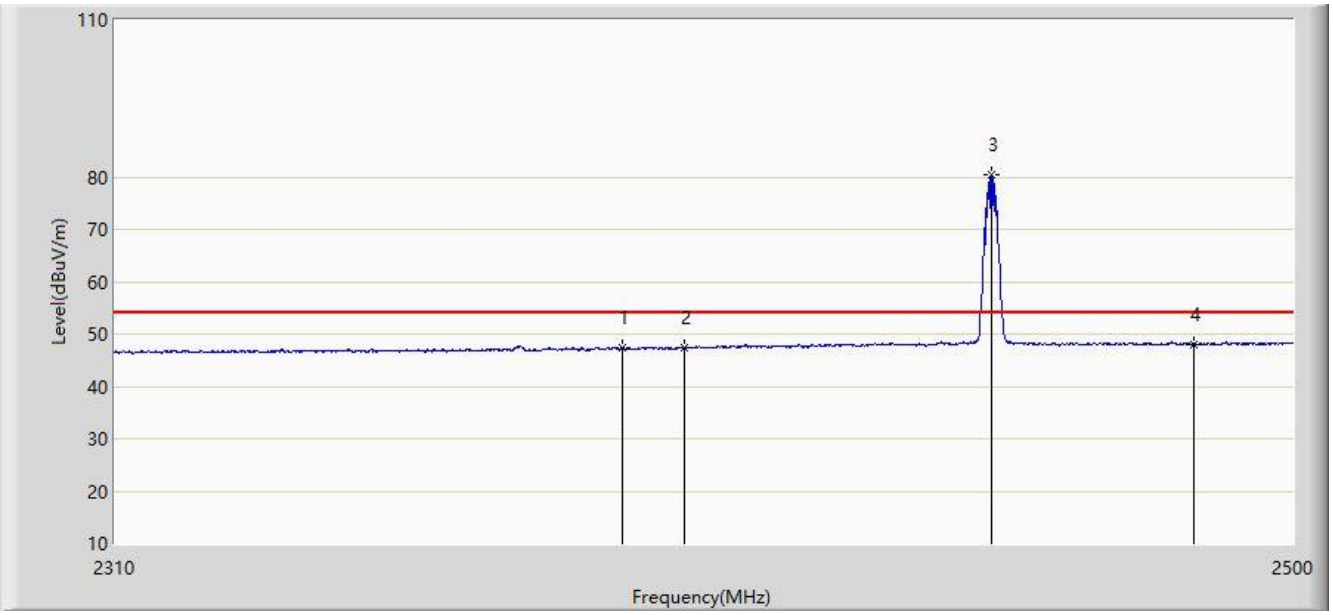

No	Mark	Frequency (MHz)	Measure Level (dBμV/m)	Reading Level (dBμV)	Margin (dB)	Limit (dBμV/m)	Factor (dB/m)	Type
1		2390.000	47.295	15.030	-6.705	54.000	32.265	AV
2		2400.000	47.338	15.331	-6.662	54.000	32.007	AV
3		2450.030	80.470	47.911	N/A	N/A	32.559	AV
4	*	2483.500	48.112	15.340	-5.888	54.000	32.772	AV

Note 1: Measure Level (dBμV/m) = Reading Level (dBμV) + Factor (dB/m)

Factor (dB/m) = Cable Loss (dB) + Antenna Factor (dB/m)

Note 2: "*" During the radiated emission testing, there was one fundamental frequency (Point 3) shown on the trace. The radiated emission requirements are not intended to be applicable to the intentional transmissions from a radio transmitter as defined by the ITU, nor to any spurious emissions related to these intentional transmissions.

5.5. 20dB Bandwidth Measurement

5.5.1.Test Limit

Intentional radiators must be designed to ensure that the 20 dB bandwidth of the emission in the specific band.

5.5.2.Test Procedure used

ANSI C63.10-2013 Clause 6.9.2

5.5.3.Test Setting

1. Set the spectrum span range to overlap the nominal center frequency
2. Set RBW = 1% ~ 5% of the OBW
3. VBW ≥ 3 × RBW
4. Detector = Peak
5. Trace mode = max hold
6. Sweep = auto couple
7. Allow the trace to stabilize and marker the highest level
8. Determine the display level (the highest level - 20dB) and place two markers, one at the lowest frequency and the other at the highest frequency

5.5.4.Test Setup

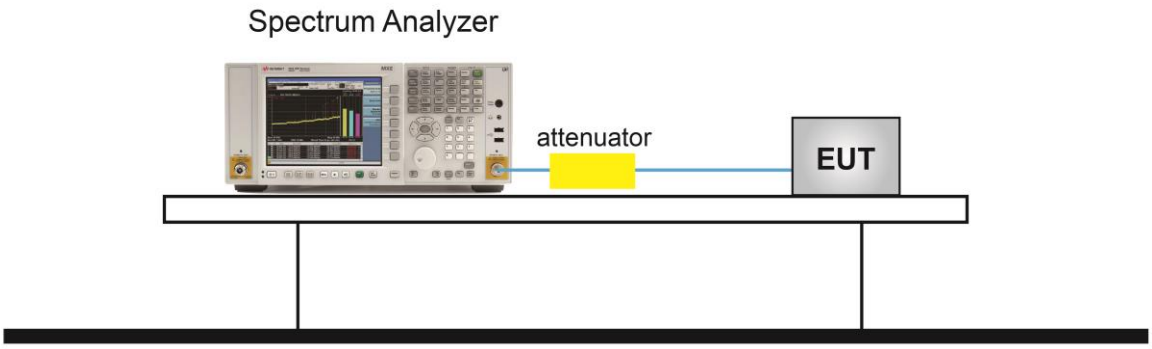

5.5.5.Test Result

Test Site	SIP-AC2	Test Date	2021/09/02
Test Engineer	Chase Zhu		

Test Mode	Test Frequency (MHz)	20dB Bandwidth (MHz)
Mode 1	2450	1.523

20dB Bandwidth

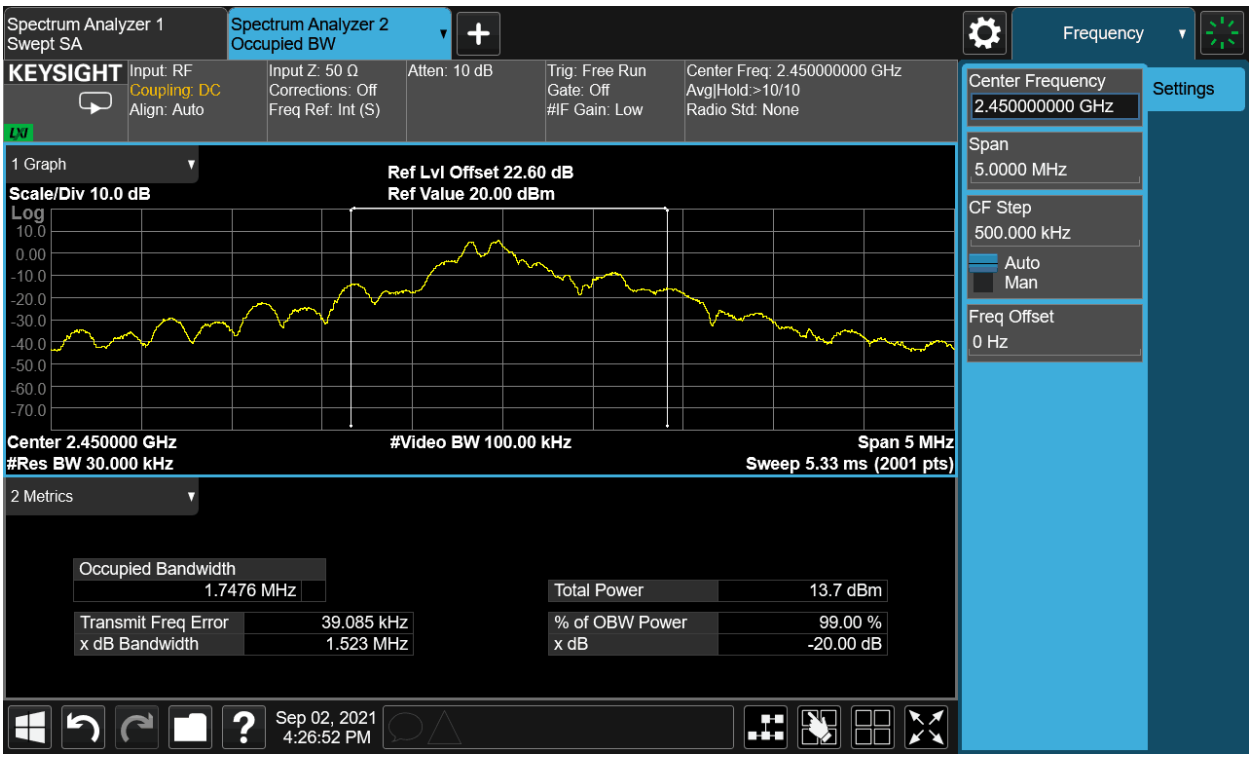

6. CONCLUSION

The data collected relate only the item(s) tested and show that this device is compliance with Part 15.249 of the FCC Rules.

The End

Appendix A - Test Setup Photograph

Refer to “2102RSU052-UT” file.

Appendix B - EUT Photograph

Refer to “2102RSU052-UE” file.