Potensic

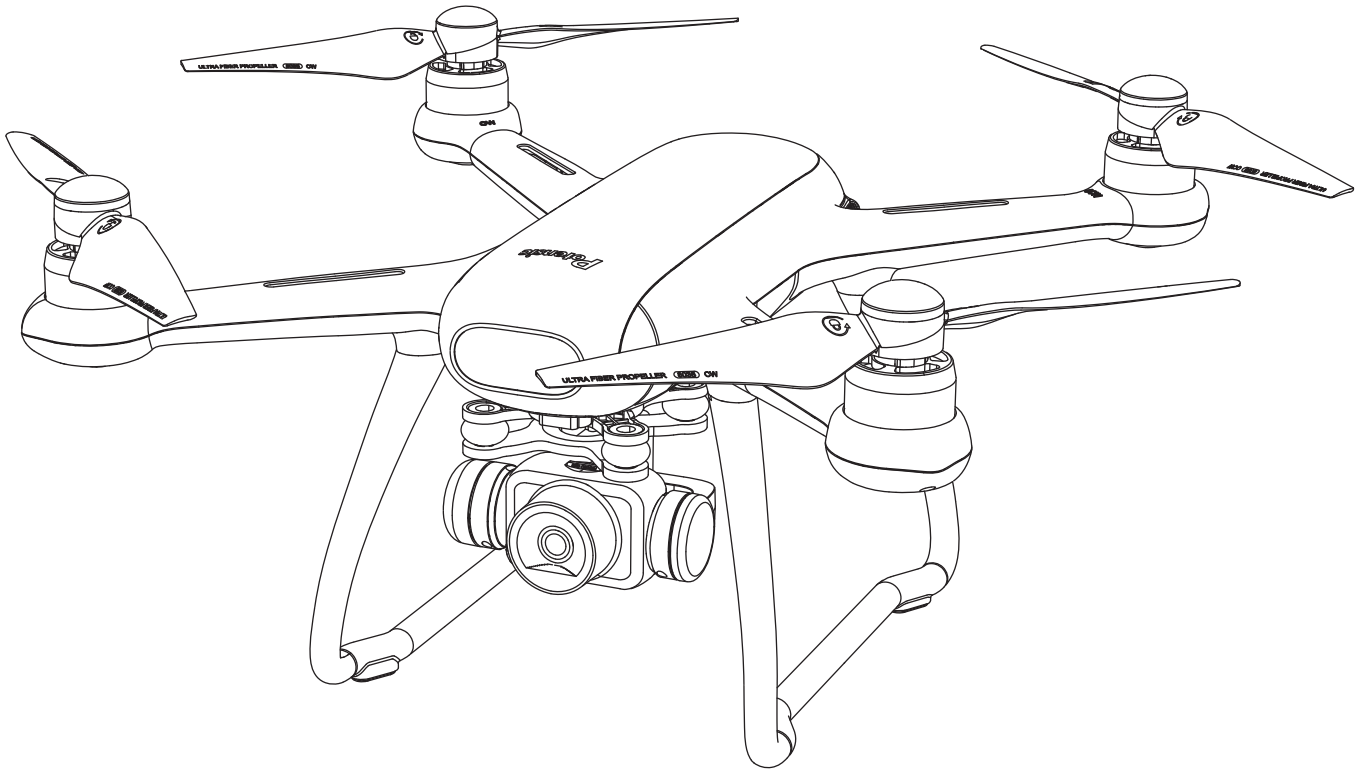

Dreamer 1
User Manual

www.potensic.com

CONTENTS

INTRODUCTION	01
MAINTENANCE	01
PACKAGE INCLUDES	01
PRODUCT DIAGRAM	02
BLADES	03
BATTERY	04
CAMERA	05
MICRO SD CARD	05
REMOTE CONTROLLER	06
PHONE CLIP	08
REMOTE CONTROLLER CHARGING	08
CONTROLLING THE AIRCRAFT	09
DRONE APP “POTENSIC PRO”	10
CONNECTION	13
SPECIFICATION	21
DRONE STATUS AND INDICATOR STATUS DESCRIPTION	23
NOTES AND DISCLAIMER	23
WARNING	25

INTRODUCTION

Thank you for purchasing the Potensic Dreamer 1 Drone. Please check this user manual carefully and save it for future reference. If you need any help, please contact our support team and provide your product Amazon/Website order number.

Potensic Dreamer 1 is equipped with intelligent flight control system, which can realize the functions of way-point flight, intelligent follow, and auto return home. With a 1/3 inch Sony CMOS image sensor and a camera anti-shake system, the camera can stably shoot up to 30 frames per second of 2.7K high-definition video and 4.0 million pixels of photos.

MAINTENANCE

1. Use a clean soft cloth to clean this product frequently.
2. Avoid heating or prolonged exposure to the sun.
3. Don’t put the product in water. It will damage electronic parts.
4. Please check the plug and other accessories atregular intervals. If there is any damage, please stop using it immediately until it is repaired completely.

PACKAGE INCLUDES

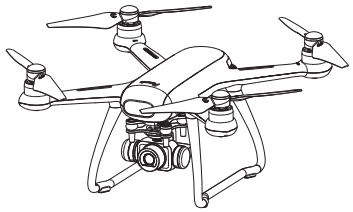

Drone with 2.7K camera x1

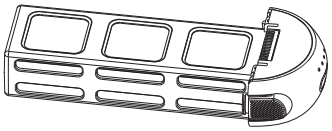

Battery x1

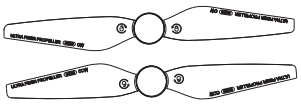

Extra Blade x 2 (CCW & CW)

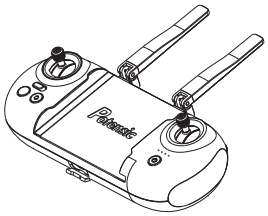

Remote Controller x1

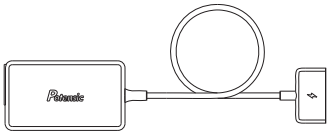

Drone Charger x1

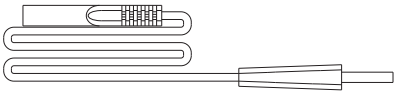

Remote Controller x1

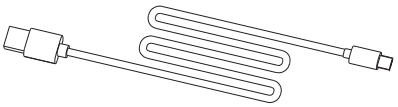

USB Charging Cable x1
(for remote controller)

Quick Start x1

User Manual x1

PRODUCT DIAGRAM

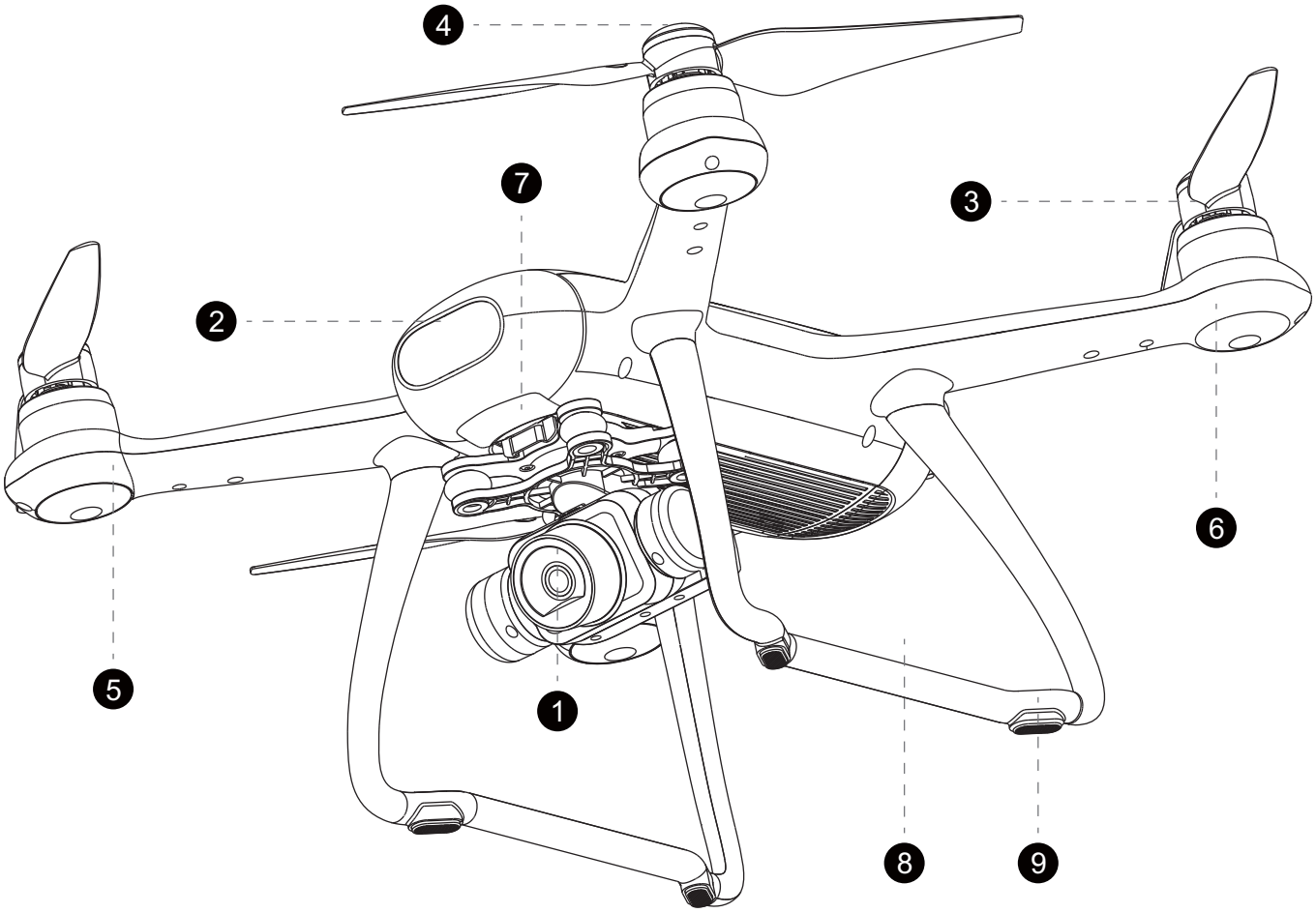

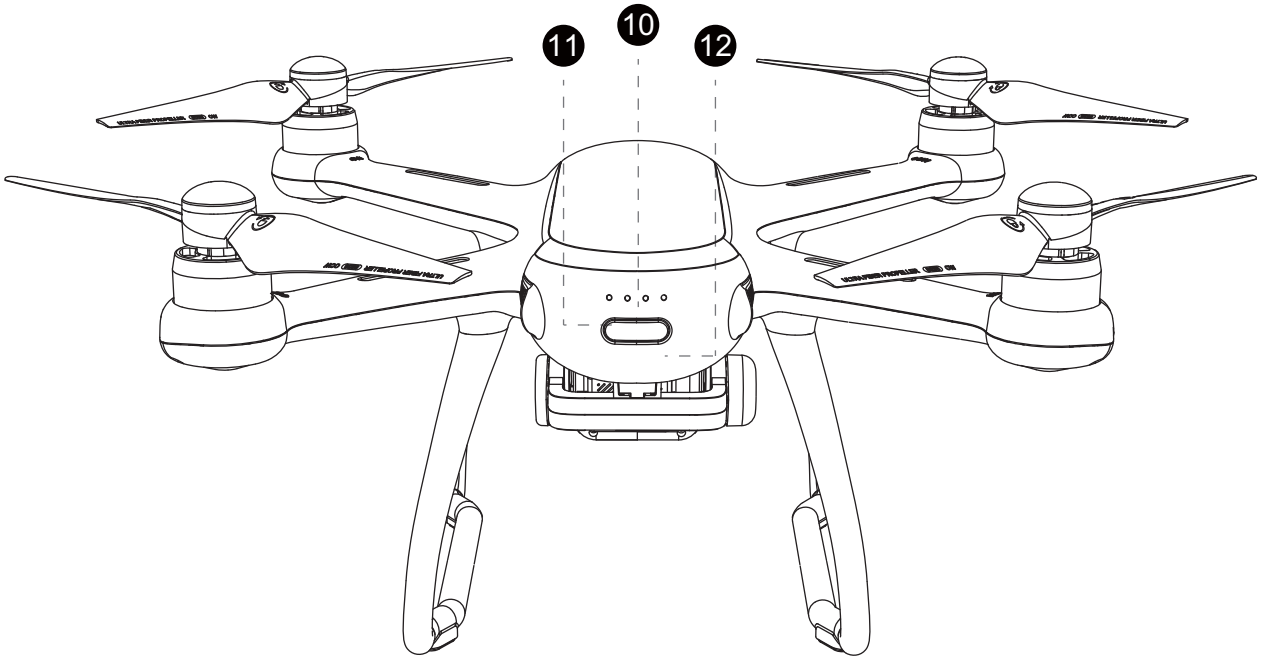

1. 2.7K Camera
2. Dreamer LED Light
3. Motor
4. Blade
5. Front LED
6. Tail LED
7. Shock Absorber Plate
8. Landing Gear
9. Foot Pad
10. Smart Battery
11. Power Indicator
12. Power Button (Short press once and then long press 2s to turn on / off the drone)

BLADES

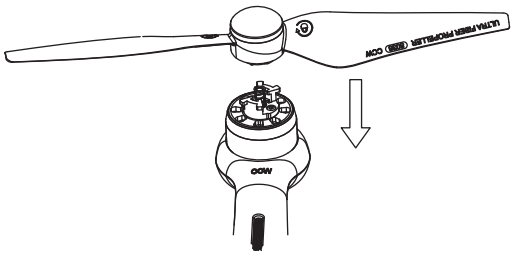

Press down and rotate according to the marked direction of blade locking until it can not be turned; unload the blade, reverse the above steps.

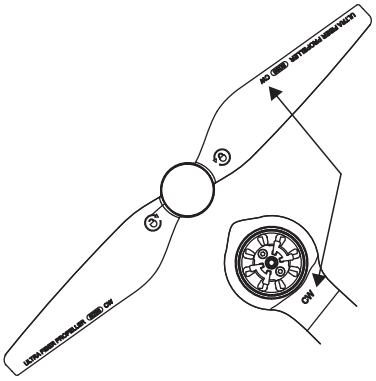

When installing, please pay attention to the right rotating direction of the blades, which are printed with "CW" and "CCW". So, you need to install them according to "CW" and "CCW" marks.

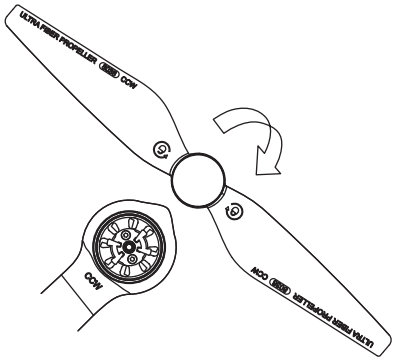

BATTERY

BATTERY CHARGING

When the drone's power is too low, please fly the drone back and charge the battery in time. Connect the adapter to charge the battery. When charging, the indicator flashes. When full charged, the battery indicator lights will be off. The full charging time is about 2 hours.

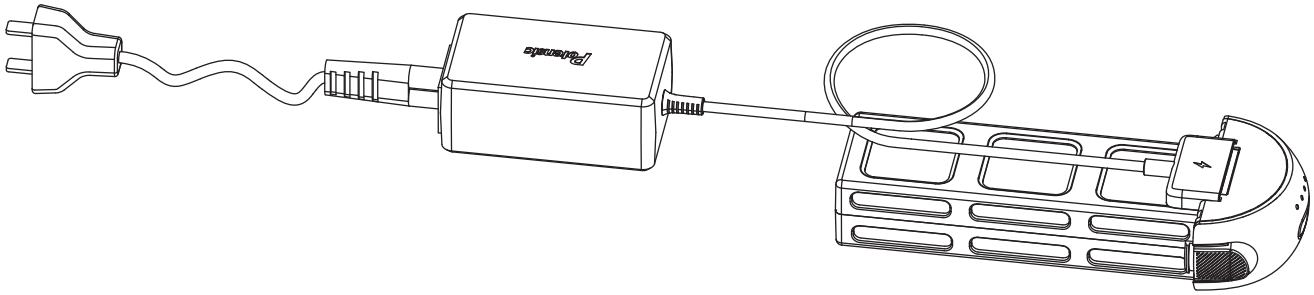

WARNING

1. Please charge the battery with a professional charger.
2. Do not charge on the carpet in case of fire.
3. Recharge every 3 months or so to keep the battery active.
4. Keep battery away from liquids, extreme heat (e.g fire or electric heating devices), and strong magnetic fields.
5. Do not use batteries to hit or knock hard surfaces.
6. Never break down batteries.
7. Do not leave when charging.

BATTERY INSTALLATION AND TAKING OUT

As shown in Pic 1, insert the battery in the right direction into the drone.
As shown in Pic 2, pinch the buttons on the left and right sides of the battery and pull out the battery.

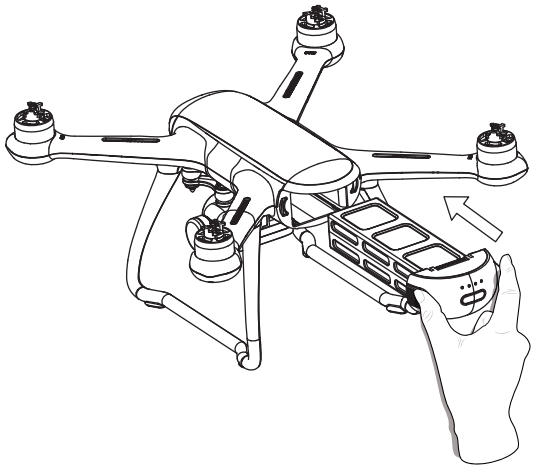

Pic 1

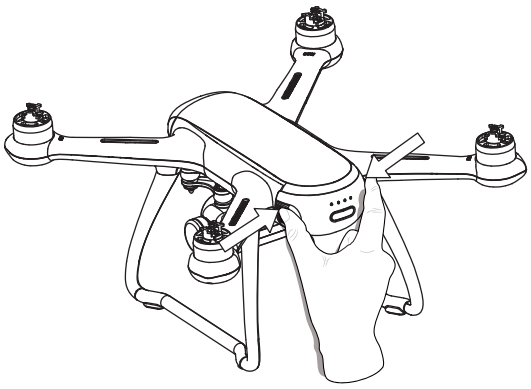

Pic 2

Note: When you hear a click sound, indicating that the battery is fully inserted successfully.

CHARGING INDICATOR STATE

LED 1	LED 2	LED 3	LED 4	Current battery capacity
☼	○	○	○	0%~25%
☼	☼	○	○	25%~50%
☼	☼	☼	○	50%~75%
☼	☼	☼	☼	75%~100%
○	○	○	○	Full

☼ Flashing status ○ Lights out state

CAMERA

1. Install the shock absorber ball on the shock absorber board and install the anti-tripping device.
2. Insert the power cable and steering wire of the camera into the connector of the aircraft adapter board, respectively.
3. Close the connecting wire cover.

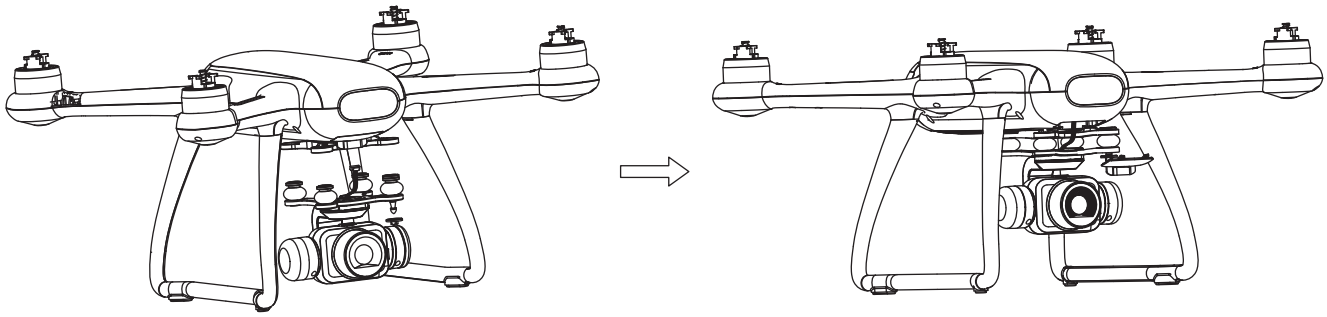

MICRO SD CARD

Inset the Micro SD card into the camera SD card slot. It is recommended to use the brand product such as SanDisk, Kingston or Samsung, and needs Micro SD cards with at least 4GB and max up to 256GB. All the pictures and videos will be only saved in Micro SD card and not in App or your phone. The Micro SD card is not included in the package.

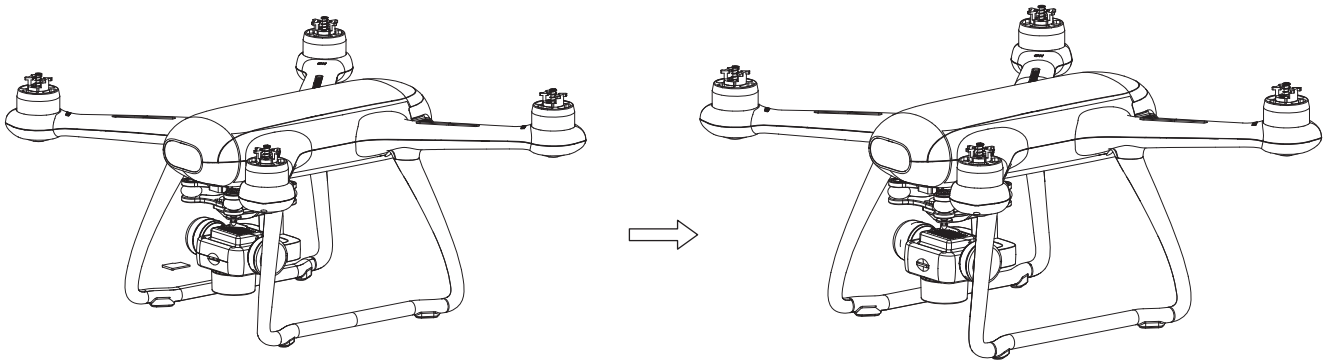

Insert the Micro SD card with its metal chip up.

REMOTE CONTROLLER

KNOW YOUR REMOTE CONTROL

Dreamer1 uses a 2.4G remote controller with complete function keys. It can complete various operations and settings of aircraft and the camera within a maximum communication distance of 500 meters and display high-definition pictures on mobile devices in real time through App “Potensic Pro”. The remote controller is equipped with rechargeable lithium batteries, which can work continuously for up to 4 hours.

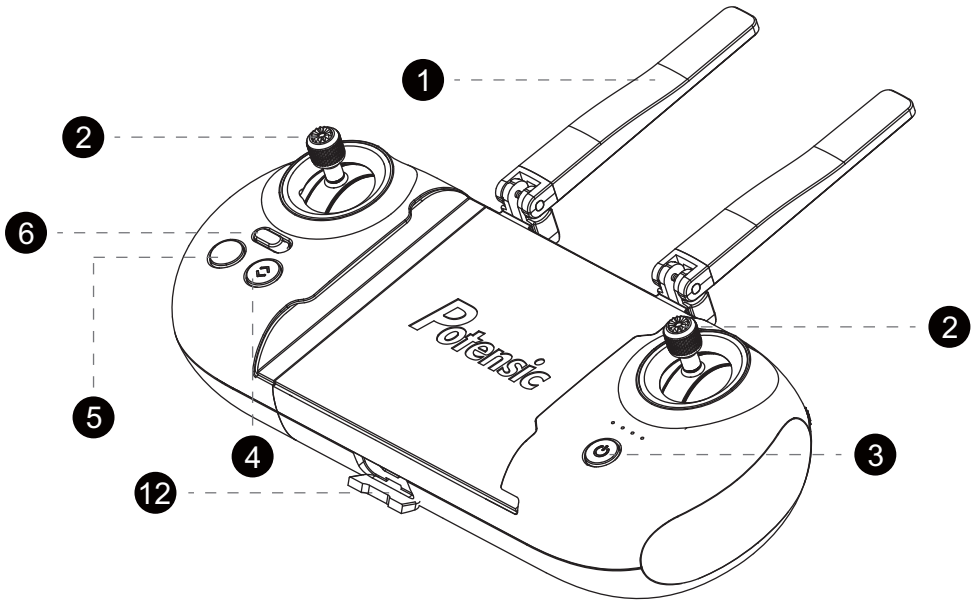

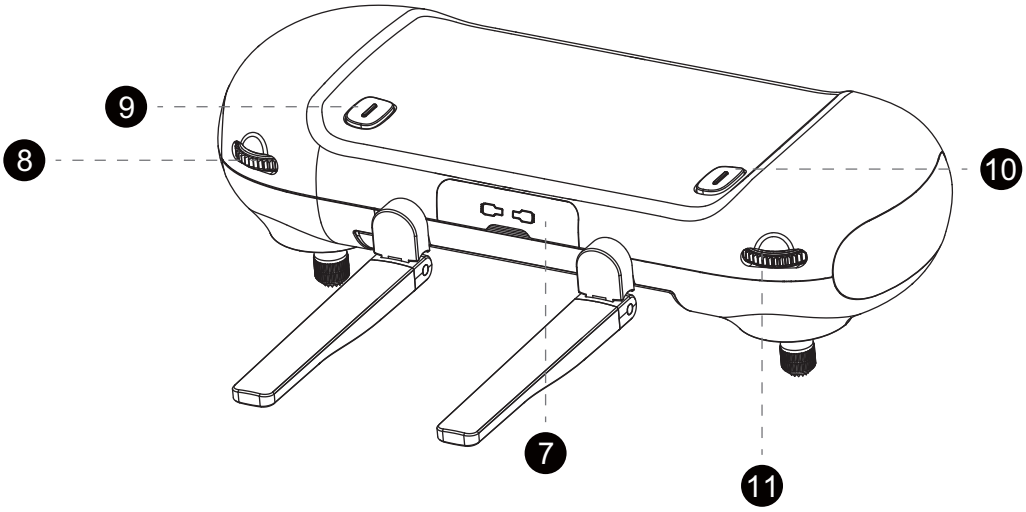

1 **Folding Antenna**
Receive transmission signals

2 **Controlling Stick (Mode1)**
Pull the left stick up or down to take off and land the drone, pull the stick left or right to let the drone turn left or turn right. Short press the left stick to switch GPS mode or Attitude mode. Pull the right stick up or down to control the drone fly forward or backward, pull the stick left or right to let the drone left side or right side fly.

3 **Power Button**
Long press to turn on / off the remote.

4 **One-key Takeoff and Landing**
Long press 1s to take off or land your drone.

5 **One-key Return**
Press the button to return your drone back.

6 **Normal / Sport Mode**
Push the button to adjust the different speed of the drone 5m/s or 8m/s.

7 **Controlling Stick Storage Box**
There is a inner box to storage your controlling sticks.

8 **Camera Adjust Wheel**
Roll the wheel to adjust the Lens shooting angle, 90° adjustable.

9 **Take Photos**
Press the button to take a picture.

10 **Record Videos**
Press the button to record a video.

11 **Camera Brightness Adjust**
Roll the wheel to adjust the camera shooting brightness.

12 **Micro USB Charging Interface**
Charge the battery through this Micro USB interface.

PHONE CLIP

Pull the remote control plate, and put your phone or tablet into it. Phone clip telescopic range: 97-178mm.

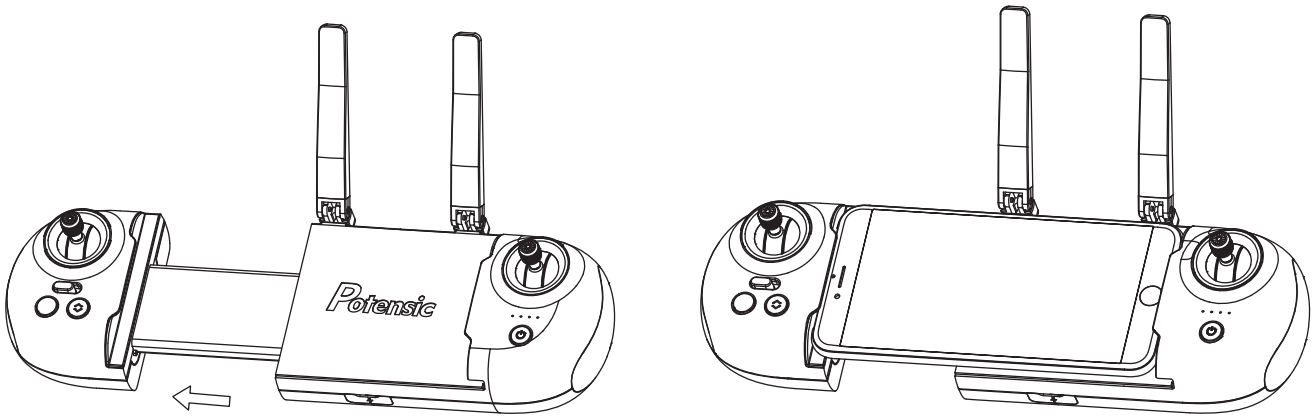

REMOTE CONTROLLER CHARGING

CHARGING INSTRUCTIONS

Connect the Micro USB interface of the remote controller to charge the most commonly used 5V/2A charger. Full charging takes about 2 hours.

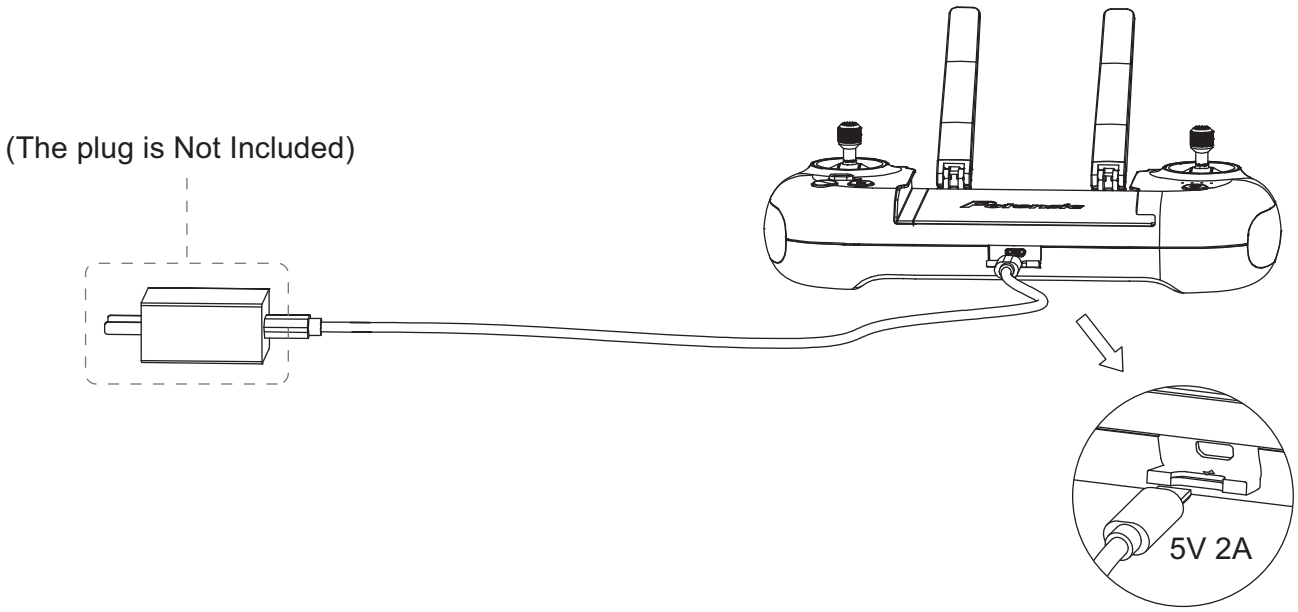

CONTROLLING THE AIRCRAFT

There two remote control modes for controlling the aircraft, mode 1 and mode 2. And the remote control is set to mode 1 by default.

MODE 1

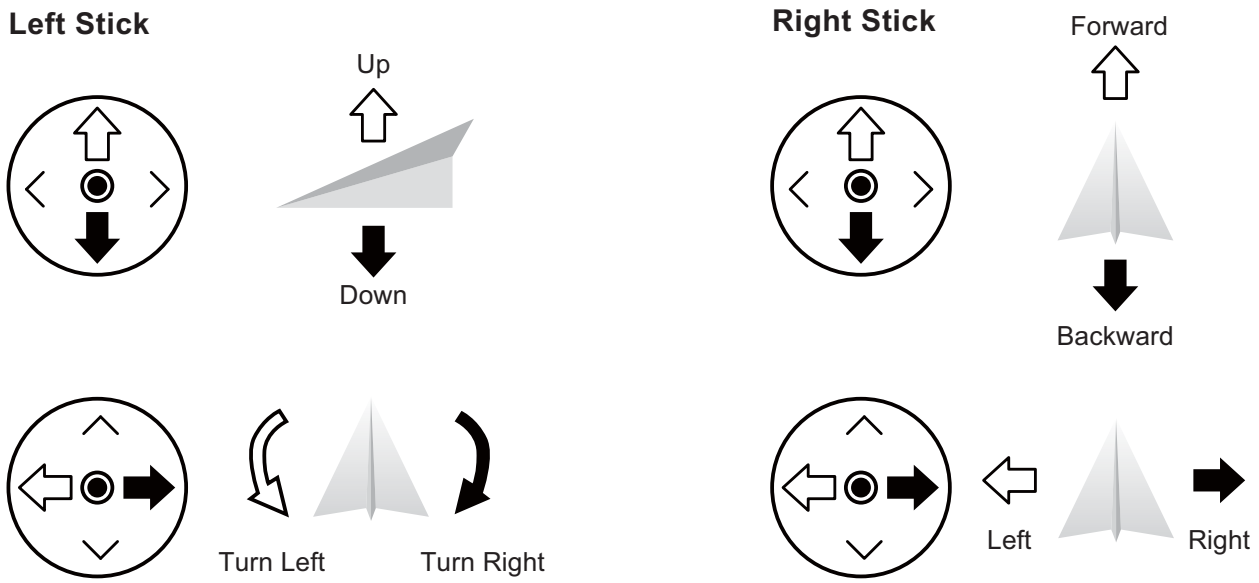

MODE 2

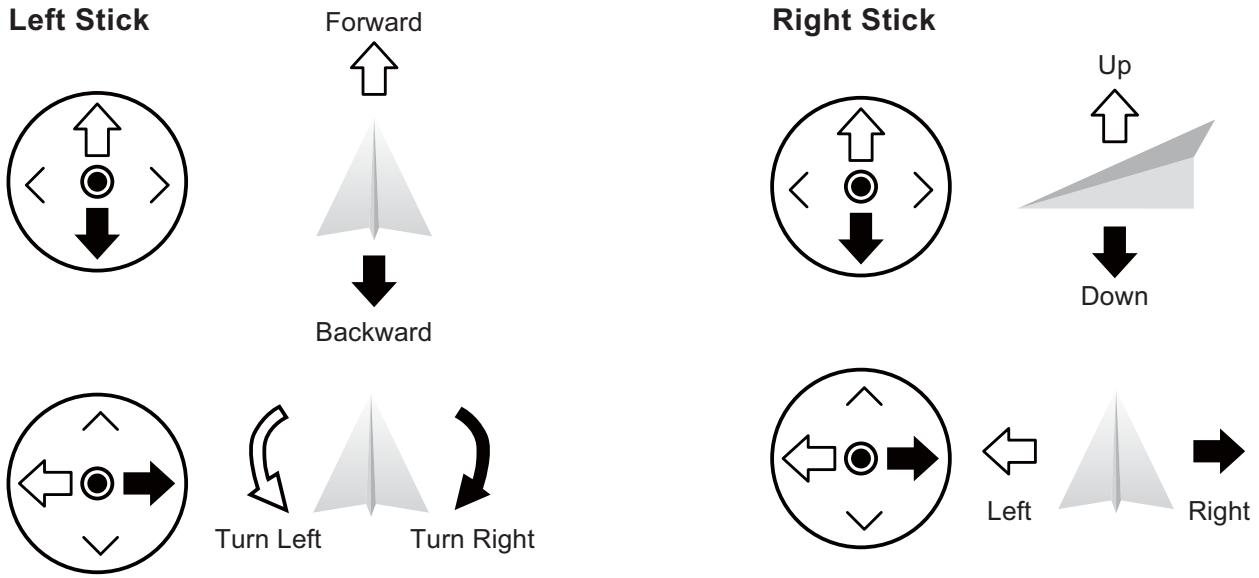

DRONE APP “POTENSIC PRO”

FOR ANDROID USERS

Please search and download the drone App “Potensic Pro” in Google Play or scan the below QR to download the App. Compatible with phone with Android 5.0 or above version.

For Android

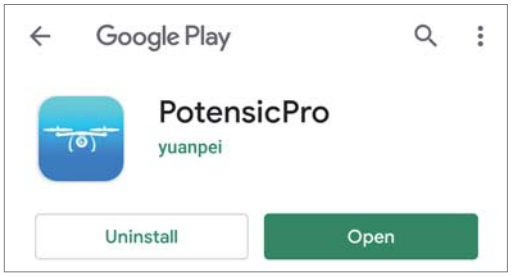

FOR IOS USERS

Please search and download the drone App “Potensic Pro” in App Store or scan the below QR to download the App. Compatible with phone with iOS 9.0 or above version.

For iOS

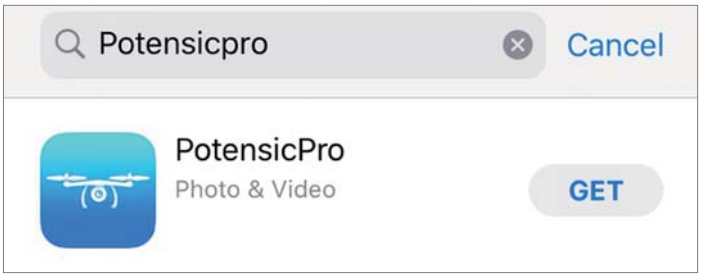

REGISTRATION AND CONNECTION

After downloading the drone App, you need to register your personal account to use it.

REGISTRATION AND LOGIN METHOD

Fill in the mailbox - fill in the password - check the agreement and agree - just click on registration; login after successful registration. (Note: Please open your phone data network when registering.)

DRONE WIFI CONNECTING STEPS

Turn on the drone - Search drone WiFi on the phone - select drone WiFi name "Dreamer 1_XXXXXX" - enter the WiFi password “12345678” to connect it.

Note: For the first time you log on to APP, please keep the phone data network on, and enter the Map interface to start map data caching.

DRONE FLIGHT MODE

Dreamer 1 uses a new generation of Potensic flight control, which supports the following flight modes

GPS mode: Accurate hover, pointing flight and other intelligent flight modes are realized under the GPS mode. Under the GPS mode, when the GPS signal is strong, it can be positioned accurately. when the GPS signal is weak, the aircraft can not be positioned accurately, and it only provides attitude stabilization, and does not support intelligent flight function.

Attitude mode: With the GPS is off, only attitude stabilization is provided. At this time, the maneuver rocker is used to control the flight of the aircraft. This mode is used cautiously by novices.

OPERATION INTERFACE

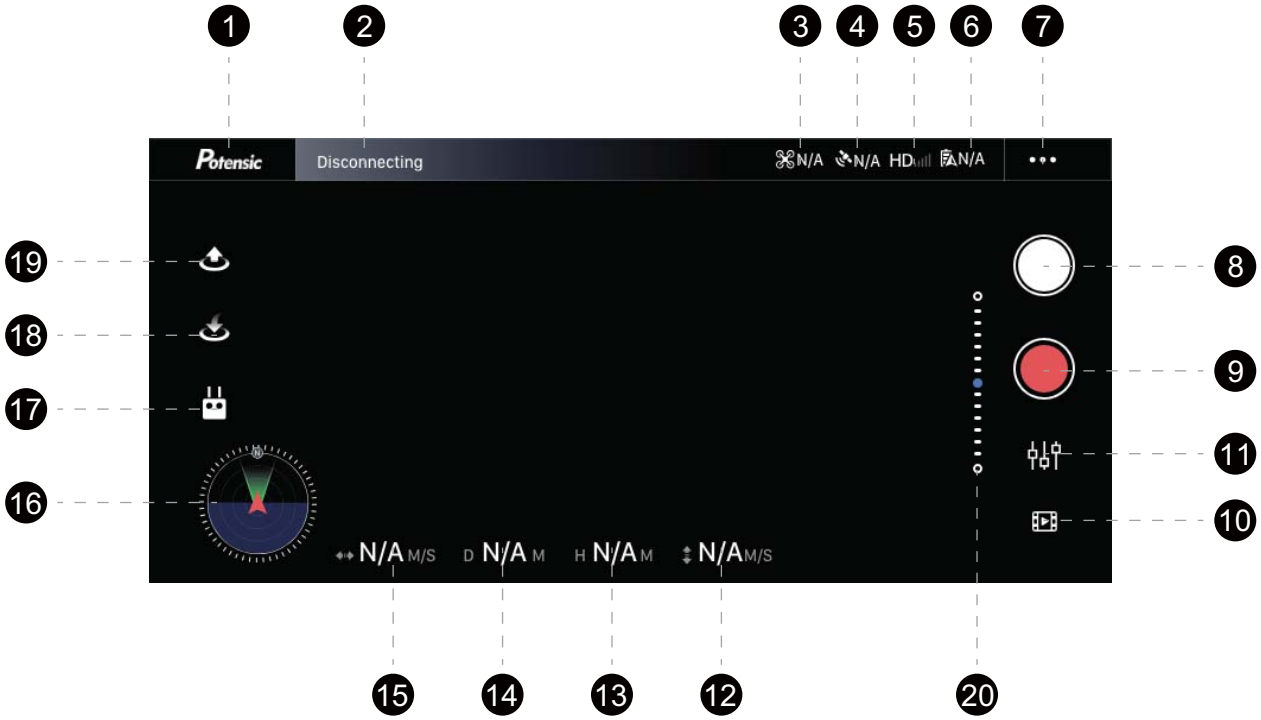

1. Return to Homepage
2. Connection Status
3. Display the Current Mode of Drone
4. GPS Signal
5. Transmission signal strength
6. Drone Power
7. Setting Interface
8. Photo
9. Video
10. File Saved in Micro SD Card

11 Camera Setting

12 Flight Height

13 Flight Distance

14 Flight Speed

15 Drone vertical flight speed

16 Attitude Ball / Map

17 Flight Mode Setting

18 One-button Return

19 One-button Take-off / One-button Landing

20 Camera Pitch Adjustment

FLIGHT MODE

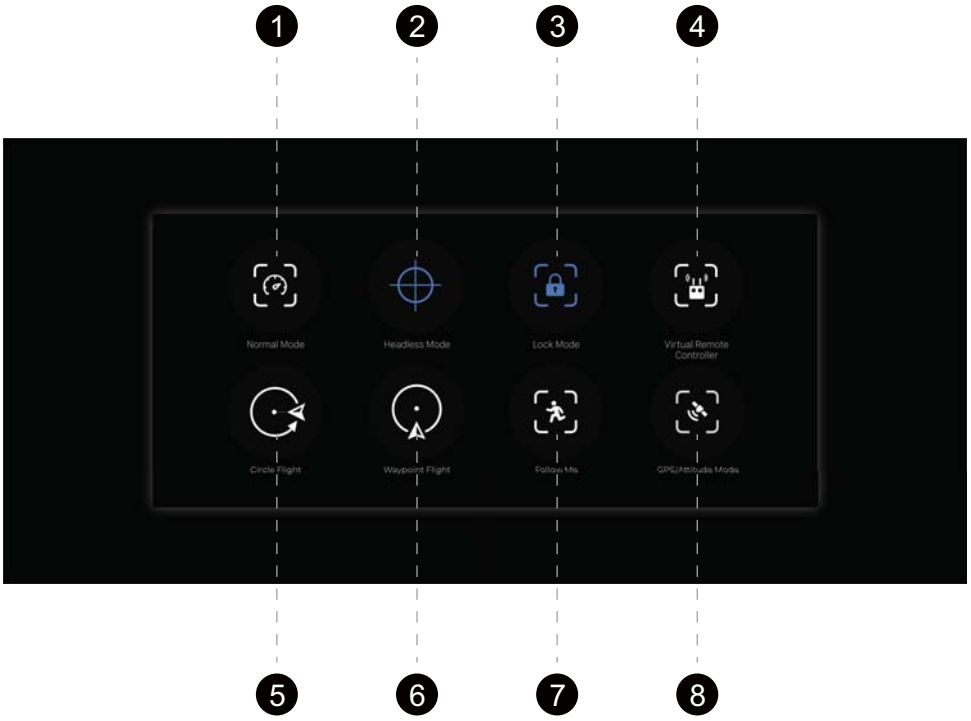

1 Normal / Sport Mode Switch

2 Headless Mode Switch

3 Unlock / Lock

4 App Remote Control

5 Circle Flight Mode

6 Way-point Flight Mode

7 Following Mode

8 GPS Mode / Attitude Mode

INTRODUCTION OF SETUP INTERFACE

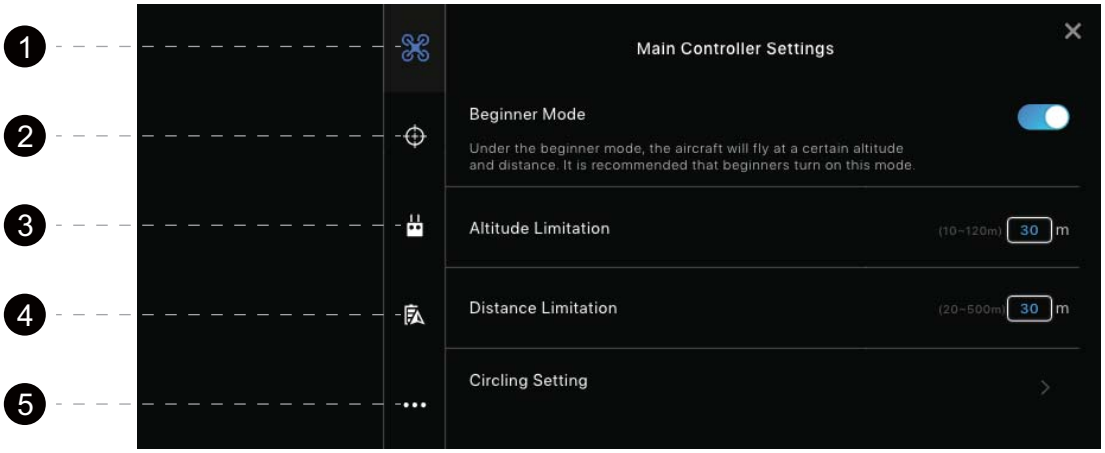

1. Main Controller Settings
2. Calibration Settings
3. Remote Controller Settings
4. About Smart Battery
5. More

FLIGHT

Matters Needing Attention When Flying

1. Make sure the remote controllers, smart flight batteries and mobile devices fully charged.
2. Check whether the fuselage is complete and the propeller is properly installed.
3. Whether the camera and the platform work properly after the power is turned on.
4. Make sure the App working properly.
5. Check whether the Micro SD card is inserted, and ensure that the camera is clean.
6. Low-power protection: When the battery power of the drone is less than 20%, the done will trigger one key return function.
7. Lost-of-control protection: The done will trigger one key return after disconnection for 3 seconds; If the drone is successfully re-connection during return the drone will hover in the air.
8. Out-of-control protection: After the horizontal tilt angle is greater than 80 degrees 0.5 seconds, the drone will lock automatically and fall directly.

CONNECTION

CONNECTION BETWEEN THE REMOTE CONTROLLER AND THE DRONE

The remote controller and the drone have been already paired when they leave the factory and can be controlled just after being powered on. But after replacing a new remote controller, the remote controller and the drone need to be re-paired to use. The pairing steps are as follows:

First, insert the battery into the drone and short press the battery switch and then long press the battery switch again for 7 seconds. At this time, the battery indicator is always on and the drone is turned on.

Then, press down the middle key of the right stick and the Power Button together for a long time to enter the binding state (Pic 1). The four footlights will flash, the remote control power lights will flash slowly.

Last, the remote control will emit a short "di" sound, and power lights are always on, drone's four footlights are always on. The drone and the remote control is bounded successfully.

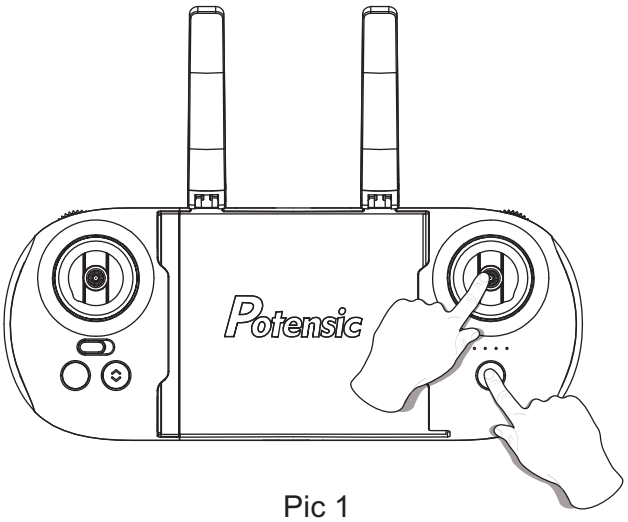

Pic 1

CONNECTION BETWEEN THE DRONE AND THE APP

First: turn on the drone, enter the mobile phone "settings" interface and enter WiFi setting, find "Dreamer 1_XXXXXX" network and connect it.

Second: open the App "Potensic Pro" in mobile phone and enter control interface.

GEOMAGNETIC CALIBRATION

The drone has been calibrated and can work normally in the factory. If the drone's geomagnetism is disturbed, it may need re-calibration. The steps are as follows:

First: Enter the Potensic App settings interface, click on the second column, and select the geomagnetic calibration in the list. The left front and left rear lights start to slowly flash, indicating that the calibration program is started.

Second: Rotate the drone 360 degrees horizontally, the right front and right rear lights start to slowly flash. (Pic 1)

Third: Rotate the drone 360 degrees vertically, the aircraft 4 LED lights will keep always on. Then the calibration is finished. (Pic 2)

Fourth: If the 4 LED lights still keep slowly flashing, indicating that the calibration failed, it is suggested that you need to change a new take-off place and do the calibration again.

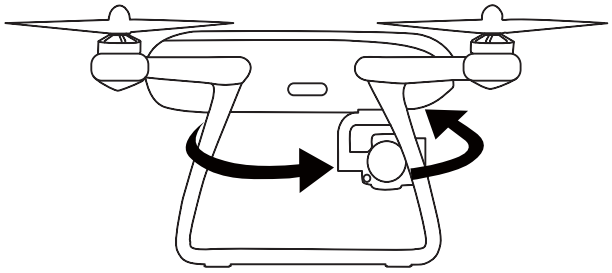

Pic 1

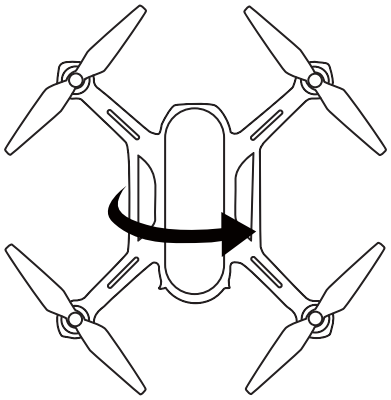

Pic 2

GYROSCOPE CALIBRATION

During the flight, if the flying direction of the drone is deviated greatly, you need to place the drone on the horizontal flat and start gyroscope calibration.

First: open the App, and click

Second: choose “Gyroscope Calibration”. At this time, the drone will enter calibration status, then, the drone 4 LED lights will slowly flash 3 seconds. The Pop-ups will display calibration successful tip , indicating the calibration is successful.

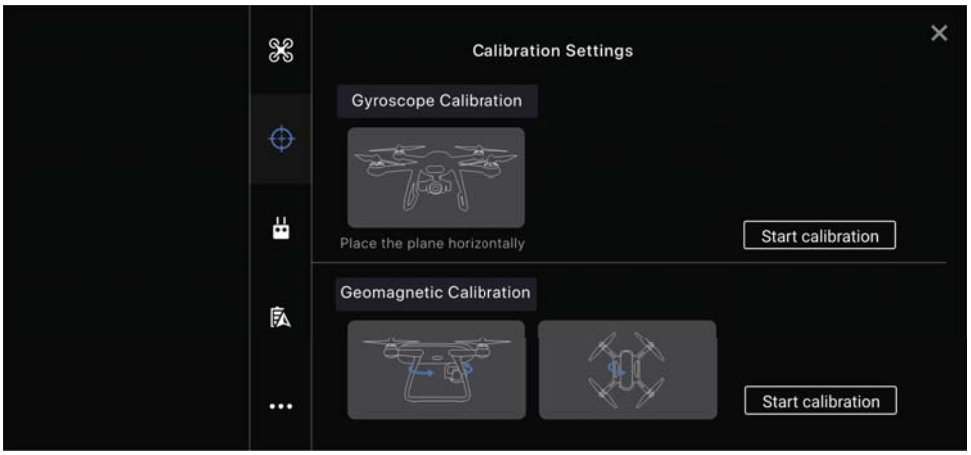

TAKE-OFF AND LANDING

Safety Flight Tips

Beginner mode is the default mode of operation for this product, in Beginner mode:

1. Flight Distance Limitation: 0-30m
2. Flight Altitude Limitation: 0-30m

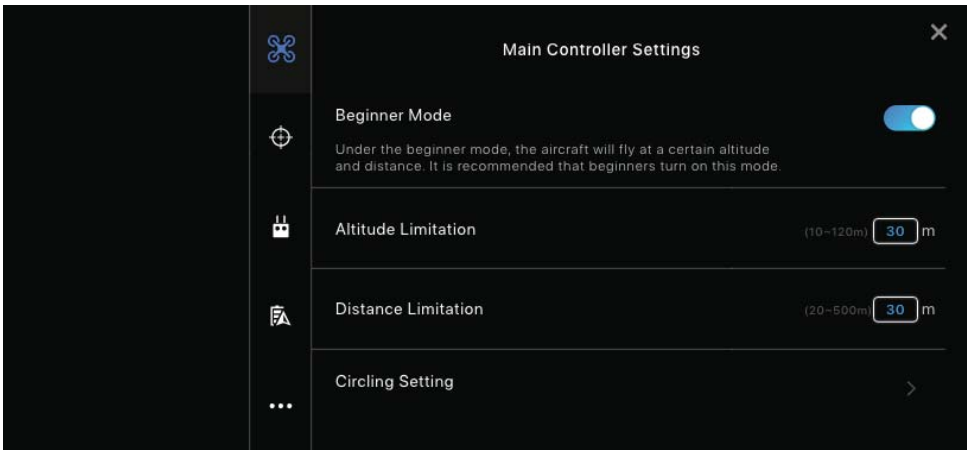

Unlock the drone first: Push the left stick to down right and right stick down left together (Pic 1) to unlock the drone or just click the unlock key on the App.

Then long press 1 second "take off and land" key, you will hear a short "di" sound or click icon on the APP. Then the drone will fly up slowly and hover at an altitude of about 1.2 meters.

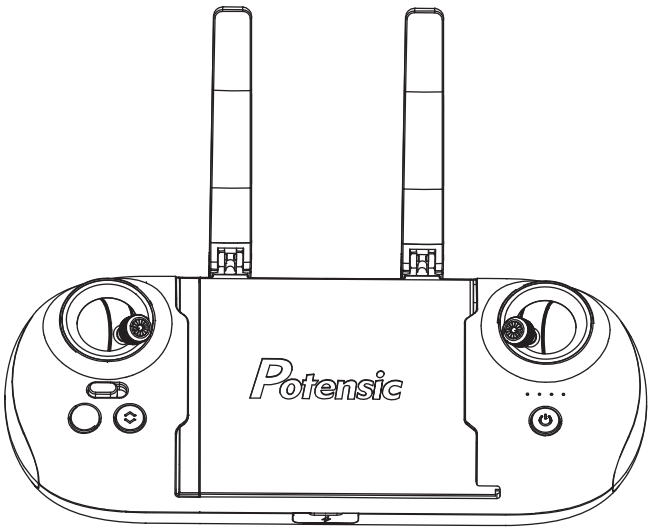

Pic 1

RETURN TO HOME(RTH)

The Intelligent Return (RTH) function enables the aircraft to return to the final recorded take-off point. This function must be realized under the GPS mode. There are three types of intelligent return flight mode: One-button return, Low-Power return and Lost-of-signal return.

***One-button return:**

Remote Control: Long press the "HOME" key on the remote control, you will hear a continue “di” sound. Then, the drone will auto fly back. Long press "HOME" key again to exit auto return and the “di” sound stops.

App Control: Click the "HOME" icon on the APP to start One-button return. And click the icon to cancel auto-return.

***Low power return:**

Intelligent Return: When the power of the aircraft is less than 20%, the aircraft will automatically start the return mode. At this point, the remote control will emit “di” sounds, the battery power icon flashes on the App, and the Return icon lights up when the drone is flying back.

Low-power Protection: The drone system will judge if the drone needs auto return according to the distance and the battery power situation. When the drone is flying back, its 4 LED lights continue to flash slowly until it lands on the ground.

***Lost-of-Signal Return:**

When the drone lost connection with the remote control, it will auto fly back to 30m away from the controller. And the drone can reconnect the remote control when flying, then you need to operate the throttle stick to let it land. And you can push the left and right sticks inwards 45° to lock the motors.

Note: The aircraft does not have an obstacle avoidance function. If the drone hits a building or some obstacle on the way auto-return, it will fall down.

HEADLESS MODE

Note:

Because the operator's operating position is very important for the realization of "headless mode" when the frequency is aligned. Therefore, after entering the "headless mode", please do not change the operator's operation direction.

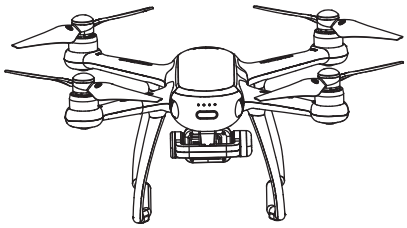

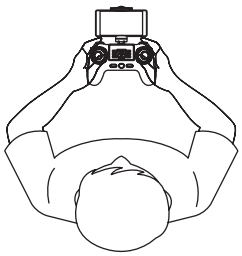

Keep the same orientation of operator facing when in pairing as the pictures.

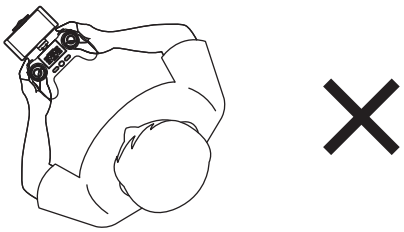

Don't change the orientation

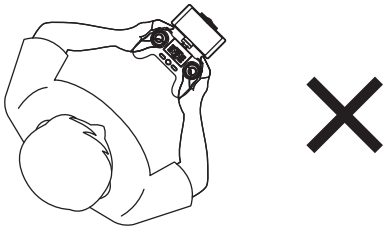

Don't change the orientation

How to Start Headless Mode

Put the drone on the ground with its head forward and its back against you, then pair the drone with the remote control. And click the headless mode button on the App to enter the headless mode and click the headless mode icon again to exit.

Under the headless mode

The forward direction is the direction the pilot faces where the pilot pairs the drone with the transmitter. If the pilot pushes the direction stick forward / backward, the drone will fly forward / backward. If the pilot pushes the right stick left / right, the drone will fly left / right relative to you. It is very important that the pilot does not change positions or the direction he is facing, because this will cause confusion on the drone.

ORBIT FLIGHT MODE

Click the icon to enter Orbit Mode. (Circle Flight)

Under normal flight conditions (flight altitude greater than 5 meters), the aircraft defaults to the current position as the center of the surround, 10 meters as the radius, 3m/s flying, clockwise surround flying.

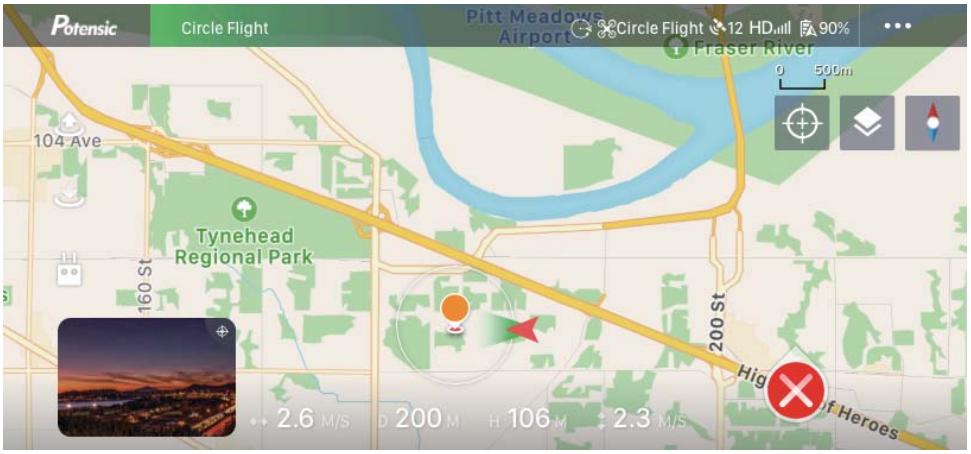

FOLLOWING FLIGHT MODE

Click the icon to start the Following Mode.
The normal flight altitude must be more than 5 meters, and the GPS signal is greater than or equal to 6 stars. The drone will follow the mobile phone.

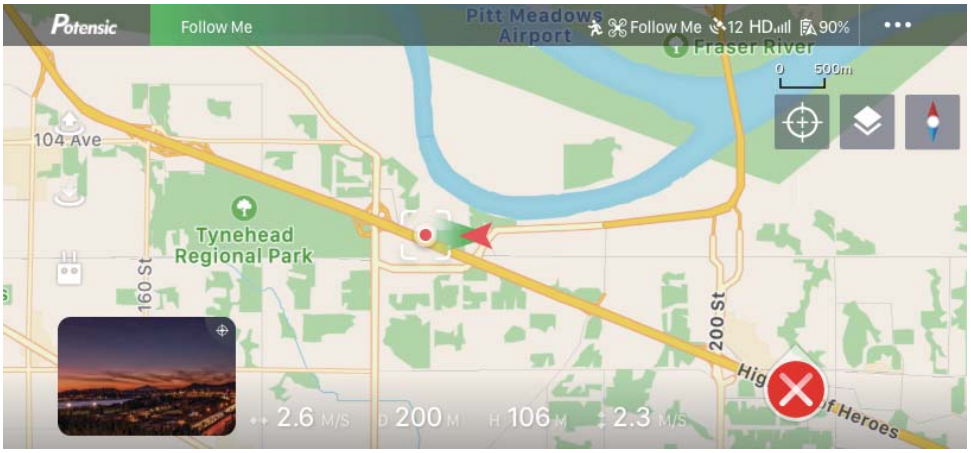

WAY-POINT FLIGHT MODE

Click the icon to start the Way-point Mode.
Set several position point on the map, then the drone will fly according to the point you have set. Totally 1-15 position points can be set. At each point, the map will be marked with its serial number.

The normal flight altitude is more than 5 meters, the GPS signal number is at least 6, the aircraft flies to the designated points on the map in the shortest path according to the ordinal number of points, and finally hovers at the last designated point.

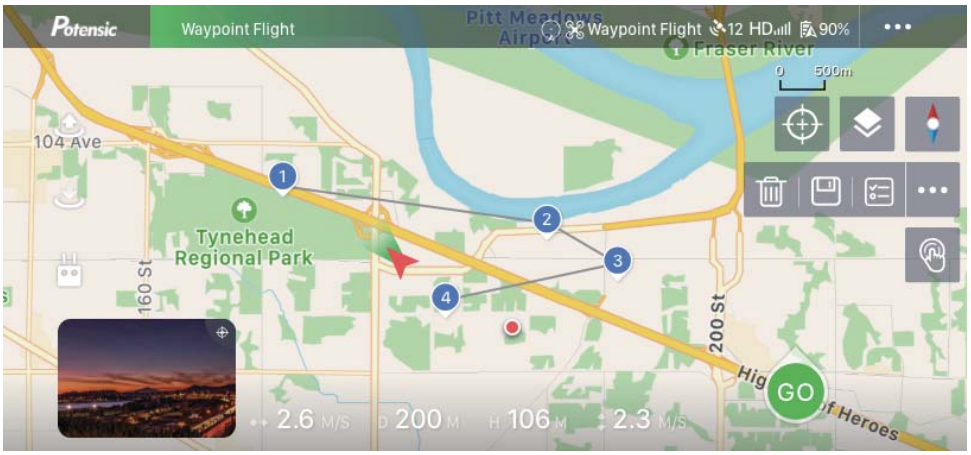

SPECIFICATION

DRONE

Flying weight: 740g
Maximum ascending speed: 5 m/s (sport mode); 3 m/s (normal mode)
Maximum descent speed: 3 m/s (sport mode); 3 m/s (normal mode)
Maximum horizontal flight speed: 8 m/s (sport mode); 5 m/s (normal mode)
Flight time: about 30 minutes
Working ambient temperature: 0°- 40° C
Satellite positioning systems: GPS + GLONASS
Working frequency: 2.402 - 2.483GHz and 5.725 - 5.850GHz
Transmitting power: 2.4GHz:<18 dBm
5.8GHz: <24 dBm
Hovering accuracy (vertical): +0.1 m (when GPS positioning works normally)
Hovering accuracy (Level): +0.3 m (when GPS positioning works normally)

CAMERA

Image sensor: 1/3 inch Sony CMOS; effective pixel 4.0 million
Lens: FOV 78 degrees
Maximum resolution: 2688 x 1512
Photo shooting mode: single shot
Controllable range of rotation: +0° -90°
Video resolution: 2.7K: 2688 x 1512 30p
Maximum video storage bit stream: 20 Mbps
Supporting file systems: FAT32
Picture format: JPEG
Video format: MP4 (AVC/H.264)
Support memory card type: Micro SD card; at least 4GB and maximum support 256GB, transmission speed of class 10 or above Micro SD card.
Working environment temperature from 0° to 40° C

REMOTE CONTROLLER

Working frequency: 2.402 - 2.483GHz
Maximum effective distance of signal: 500m (under environment with no interference and no occlusion)
Working environment temperature: 0° ~ 40°C.
Battery: 1200mAh lithium battery, 1S
Equivalent Omnidirectional Radiation Power (EIRP) 2.4GHz: <16 dBm
Operating voltage / current: 3.7 V / 0.15 A

SMART BATTERY

Capacity: 3000mAh
Voltage: 15.2V
Battery type: Li-Po 4S
Energy: 45.6Wh
Battery overall weight: 255g
Working environment temperature: -10°~40°C
Maximum charging power: 26.25W

CHARGER

Rated input: 100-240V ~ 50 / 60Hz, 1.5A
Rated output: 17.5V, 1.5A
Rated power: 26.25 W

COMMON PROBLEMS AND SOLUTIONS

Problems	Solutions
Equipment not connected properly.	Restart the aircraft and remote control.
Can't unlock the drone.	Check whether the aircraft finished the geomagnetic calibration successfully.
No GPS signal or GPS satellite dropping can be found	Check the surrounding environment of the aircraft to see if there is high-frequency signal interference.
Aircraft cannot return to control point.	When the aircraft takes off, it is necessary to ensure that the GPS satellite search reaches 6 or more than that.
Drone shakes or video shakes	a. Check whether the propeller and motor axle of the aircraft are deformed or cracked, and replace them if necessary. b. Check whether the screw is fixed in place after disassemble and assembly of the aircraft.
Can’t take pictures and record videos.	a. Check whether the aircraft is equipped with SD card. b. Check whether the format of SD card is correct. c. Check whether the Micro SD card is full or not.

DRONE STATUS AND INDICATOR STATUS DESCRIPTION

Normal Status	Light Status / Time	The First Second				The 2nd Seconds
		1/4	1/4	1/4	1/4	
Low Battery of drone	Four lights continue to flash slowly	Light on		Light off		Continuous loop.....
Binding state / boot	Four LEDs continuousfast flashing	Light on	Light off	Light on	Light off	Continuous loop.....
Attitude Mode	Four LEDs Solid on	Light on				Always
GPS Mode	Front LEDs solid light on	Light on				Continuous loop.....
	Tail LED continuous slow flashing	Light on		Light off		
Headless Mode	Four LEDs continuous slow flashing	Light on		Light off		Continuous loop.....
	Rear LEDs solid light on	Light on				Continuous loop.....
Urgent stop or out of control (motor shutdown)	Four LED lights periodically quick flash	Light off			Light on	Continuous loop.....

NOTES AND DISCLAIMER

IMPORTANT:

1. This product is not a toy. It is a precision device; integrating machinery and electronics with air mechanics and high frequency transmission. It requires correct assembly and debugging to avoid any accident. The user should operate and control this product in a safe manner. In case of incorrect operation, it may cause serious injury or damage property. It can also be lost due to incorrect operation.
2. This product is suitable for experienced UAV pilots no less than 14 years of age.
3. In the event of a problem during using, operating, or maintenance, please contact the local sales agent or retailer or keep in touch with the responsible staff of our company.

SAFETY PRECAUTIONS:

This R/C flying model can be dangerous when in use, please make sure you keep it far away from any persons or spectators when flying. In-correct installation, poor conditions, or users not familiar with operation may cause damage to the aircraft or injure people or may cause an unexpected accident. Please pay close attention to flying safety and learn to recognize more dangerous conditions which may cause an accident due to your own negligence.

1. Keep it far away from any structures or crowds.
   This R/C aircraft may vary slightly in speed or sensitivity while flying and can cause potential danger. Therefore, please keep it far away from crowds, buildings, trees, structures, high-voltage wire, etc. Please also avoid flying in adverse weather conditions such as rain, electrical storms, and high winds to ensure safety of the user, any spectators, and surrounding property.
2. Keep it away from any moist environment.
   The inside of the aircraft is composed of many precision electronic and mechanical parts. Therefore, please try to avoid any moisture or water content from entering the main body of the aircraft as it may cause a breakdown of the mechanical and electronic parts and thus cause an accident.
3. Only operate with included parts for intended use.
   Please use the original parts made by Potensic for any re-equipping or maintenance to ensure flying safety. Please operate and use only under the scope of the product function permitted. Using un-approved parts will void warranty.
   DO NOT use for any illegal purpose or use beyond the scope of which your local laws and regulations have stipulated.
4. Avoid controlling it independently.
   New users may have certain difficulties during the early stages of learning to operate this aircraft. Please try to avoid operating the aircraft alone. When available, always operate this aircraft under the guidance of a more experienced user.
5. Do not operate under the influence of drugs or alcohol.
   Please operate this R/C aircraft according to your own state and flying skill. Any fatigue, bad mental state, or incorrect operation may increase the probability of accidental risk.
6. Please keep a safe distance from aircraft when using top speed.
   When the operator is flying in high speed, please keep the aircraft far from the pilot and any surrounding persons or objects so as not to cause danger or damage.
7. Store it in a cool, dry place.
   The R/C aircraft is composed of material such as metal, fiber, plastic, electronics, etc. Therefore, please keep it away from any heat source and avoid prolonged exposure to direct sunlight. Excessive heat exposure can cause distortion and damage.

NOTE:

This equipment has been tested and found to comply with the limits for a Class B digital device, pursuant to part 15 of the FCC Rules. These limits are designed to provide reasonable protection against harmful interference in a residential installation. This equipment generates, uses and can

radiate radio frequency energy and, if not installed and used in accordance with the instructions, may cause harmful interference to radio communications.

- However, there is no guarantee that interference will not occur in a particular installation. If this equipment does cause harmful interfer-ence to radio or television reception, which can be determined by turning the equipment off and on, the user is encouraged to try to correct the interference by one or more of the following measures:
  - Reorient or relocate the receiving antenna.
  - Increase the separation between the equipment and receiver.
  - Connect the equipment into an outlet on a circuit different from that to which the receiver is connected.
  - Consult the dealer or an experienced radio/TV technician for help.
- Please note that changes or modifications not expressly approved by the party responsible for compliance could void the use's authority to operate the equipment.

FCC Radiation Exposure Statement

For DRONE

This equipment complies with FCC RF radiation exposure limits set forth for an uncontrolled environment. This equipment should be installed and operated with a minimum distance of 20 centimeters between the radiator and your body.

For REMOTE CONTROLLER

The device has been evaluated to meet general RF exposure requirement. The device can be used in portable exposure condition without restriction.

WARNING

1. There is important information contained in this package and instruction manual, please keep it for future reference.
2. You have the responsibility to make sure that this model of aircraft won't cause injury to others' body or cause any damage to property.
3. Please operate strictly as shown on the instruction manual when debugging or assembling this aircraft. During the process of flying or landing, please pay more attention to keep 1-2 meters between the user and the aircraft to avoid colliding to the head or face or body, which may cause injury.
4. Our company and distributors won't be responsible for any incorrect operation, which may cause loss or damage or injury to the body.
5. Children ages 14 and up should use this product under the guidance of an adult. This product is FORBIDDEN to be used by children under 14 years old.
6. Please correctly assemble and use this product as shown on the instruction manual or packing instruction. Some parts should be assembled by an adult.
7. Small parts are included with this product. Please place it beyond the reach of the children to avoid a CHOKING HAZARD or parts being mistakenly swallowed.
8. Playing on the road or near high traffic areas is strictly FORBIDDEN so as not to cause an accident.
9. Please dispose of the packing material timely so as not to cause injury to children.
10. Please DO NOT disassemble or re-equip the aircraft as it may cause a breakdown of the aircraft during flying.
11. Batteries in the battery compartment of the charger should be inserted into the designated power source which has the same logo as the product.

12. Built-in rechargeable 3.7V Li-ion battery included in the transmitter.
13. Only the original charger made from our factory can be used.
14. Charger is not a toy.
15. When charging the battery, please conduct it under the surveillance of an adult. Please also keep it far away from any combustible object when charging. Please keep this aircraft within eyesight when charging.
16. Please DO NOT make it short-circuited or squeeze the battery so as not to cause an explosion.
17. DO NOT mix the Li-ion battery with a different type of battery.
18. Intelligent lithium battery is loaded in the Quad-rotor. Both built-in or external can be used for charging.
19. Please DO NOT make the battery short-circuited or decompose the battery or throw the battery into the fire; DO NOT place the batteries near the high temperature or heated area (such as near the fire or near the electric heating device).
20. Aircraft should be kept far away from any other electric compliance or equipment as far as possible or kept far away from the place where having the magnetic object nearby as they may cause interference with each other.
21. Please keep the safe distance from the high-speed rotating rotor so as not to cause twisted or danger of being wounded or being cut.
22. Engine will heat up. Please DO NOT touch it to avoid being burned or injured.
23. Please DO NOT close this product to your ear as it may cause injury to your hearing.
24. Mini USB 5V wall charger recommended for charging. DO NOT use any charger stronger than 5V.
25. To comply with the command of the magnetic environment requirement formulated by the Aviation Radio Bureau and the related authority, during the regulated period in certain areas, please stop using the transmitter of this model when such regulation command is issued.
26. Keep your UAV within sight.
27. Never fly over groups of people.
28. Never fly over stadiums or sports events.
29. Understand airspace restrictions and requirements.

⚠ WARNING:

CHOKING HAZARD -Small parts.

Not for children under 3 years.

WARNING: Product should only be used by adults and children 14 years and older.Adult supervision required for children under 14 years of age.

WARNING: CHARGING OF THE DRONE BATTERY MUST BE SUPERVISED AT ALL TIMES BY AN ADULT. UNPLUG THE BATTERY WHEN FULLY CHARGED. DO NOT OVER-CHARGE THE BATTERY.

WARNING!

NOT SUITABLE FOR CHILDREN UNDER3YEARS DUE TO SMALL PARTS

هشدار! برای کودکان زیر ۳ سال مناسب نیست . دارای قطعات کوچک است

تحذير : غير ملائم للاطفال تحت الثلاثة (٣) سنوات بسبب القطعة الصغيرة

COUNTRY OF ORIGIN:CHINA

بلد المنشأ: الصين

صنعت وفقًا للمواصفات والمعايير العالمية

Tested according to international standards

MADE IN CHINA